CAT. NO 045−03 Ⓐ

TPC PNEUMATICS

TPC PNEUMATICS PRODUCTS

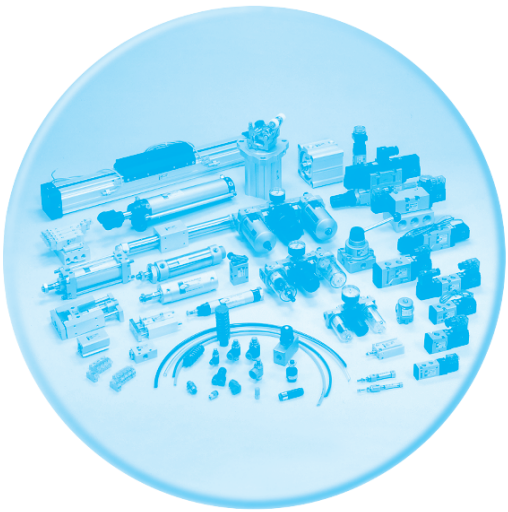

Standard Air Cylinder

Combination Cylinder

Compact Air Cylinder

ISO 9001 CERTIFIED 「EM」, 「CE」 MARK

1973 TPC Mechatronics Corp.
www.TPCpage.com

Pneumatics Products INDEX

4	TPC Total Products
9	TPC Cylinders
11	TPC Standard System
13	TPC Electronic Catalogue
14	Air Cylinder Theortical Force Table

Actuator

A-3	Air Cylinder Series ACP(Bore Size:6, 10, 16)
A-21	Air Cylinder Series AX(Bore Size:20, 25, 32, 40)
A-90	Air Cylinder Series AS(Bore Size:20, 25, 30, 40)
A-108	Air Cylinder Series AM(Bore Size:40, 50, 63, 80, 100)
A-128	AM2 Cylinder Series AS(Bore Size:20, 25, 30, 40)
A-138	Air Cylinder Series AL/ALX(Bore Size:ALX2-125, 140, 160 AL-180, 200, 250, 300
A-158	Round Cylinder Series ARD(Bore Size:32, 40, 50, 63)
A-162	Clamp Cylinder Series AJ(Bore Size:50, 63)
A-171	Compact Cylinder Series AQ(Bore Size:12, 16, 20, 25, 32, 40, 50, 63, 80, 100) Series ADQ2CP(Bore Size:50, 63)
A-214	Compact Guide Cylinder Series AG(Bore Size:12, 20, 25, 32, 40, 50, 63, 80, 100)
A-229	Direct Mount Cylinder Series ADM(Bore Size:10, 16, 20, 25)
A-242	Double Rod Cylinder Series ADR(Bore Size:10, 16, 20, 25)
A-251	Magnetically Coupled Rodless Cylinder Series AMR(Bore Size:10, 16, 20, 25, 32, 40)
A-260	Stopper Cylinder Series AST(Bore Size:50, 63, 80)
A-276	Table Cylinder Series NLCD

TPC Total Products

Actuators

Air Cylinder/Series ACP

Standard Type	Bore Size (mm)	Stroke(Double Acting) /Single Rod (mm)	Port Size (Rc)	Page
Double Acting/Single Rod	6	5~60	M5×0.8	A-3
Double Acting/Double Rod	10	5~150		
Single Acting Spring Return, Spring Extended	16	5~200		

Series ACP

Air Cylinder/Series AS

Standard Type	Bore Size (mm)	Standard Stroke (mm)	Port Size (Rc)	Page
Double Acting/Single Rod:AS Double Acting/Double Rod:ASW Non-Rotating Rod Type:ASK	20	~ 300	1/8	A-90
	25			
	30			
	40			
Adjustable Stroke Cylinder / Extension Adjustable Type Adjustable Stroke Cylinder / Retraction Adjustable Type	20	~ 300	1/8	A-99
Double Stroke Cylinder / Double Rod Type Double Stroke Cylinder / Single Rod Type Single Acting Spring Extension	25			
High Temperature Cylinder: X136 Boss Cut Type: XC1	30			
Stainless Steel Rod: XC6 Tandem Air Cylinder: XC12	40			

Series AS

Series ASW

Air Cylinder(Stainless Tube) / Series AX

Standard Type	Bore Size (mm)	Standard Stroke (mm)	Port Size (Rc)	Page
Double Acting / Single Rod:AX Double Acting / Double Rod	20	~ 300	1/8	A-21
Single Acting Spring Return Spring Extended Non-Rotating Rod Type	25			
Non-Rotating Rod Type Direct mount Type : AXR	32			
Non-Rotating Rod Direct mount Type : AXKR	40			

Series AX

Standard Type	Bore Size (mm)	Stroke (mm)	Port Size (Rc)	Page
Adjustable Stroke Cylinder / Extension Adjustable Type) Adjustable Stroke Cylinder / Retraction Adjustable Type Double Stroke Cylinder / Double Rod Type Double Stroke Cylinder / Single Rod Type Tandem Air Cylinder: XC12	20	~ 300	1/8	A-37
	25			
	32			
	40			

Series AX

Air Cylinder / Series AM

Standard Type	Bore Size mm	Stroke mm	Port Size Rc	Page
Basic Type Standard Type : AM Non-Rotaing Rod Type Double Acting / Double Rod	40	~ 500	1/4	A-108
	50	~ 600	3/8	
	63			
	80	~ 700	1/2	
	100			
Adjustable Stroke Cylinder / Extension Adjustable Type) Adjustable Stroke Cylinder / Retraction Adjustable Type Double Stroke Cylinder / Single Rod Type Double Stroke Cylinder / Double Rod Type With Scraper : XC4 Over Sized Rod : XB4 Tandem Air Cylinder: XC12 High Temperature Cylinder: XCB6 With Coil Scraper : X104	40	~ 500	1/4	A-121
	50	~ 600	3/8	
	63			
	80	~ 700	1/2	
	100			

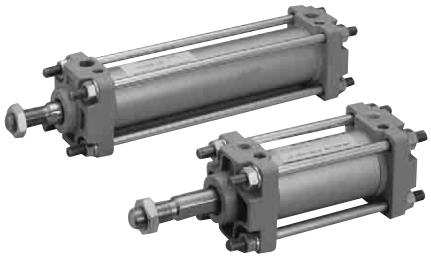

Series AM

AM2

Standard Type	Model	Bore Size mm	Stroke mm	Port Size Rc	Page
Double Acting Single Rod	AM2	40	1/4	~500	A-128
		50	3/8	~600	
		63	3/8	~600	
		80	1/2	~700	
		100	1/2	~700	
Double Acting Double Rod	AM2H	40	1/4	~500	
		50	3/8	~600	
		63	3/8	~600	
		80	1/2	~700	
		100	1/2	~700	
Double Acting	AM2N	40	1/4	~500	
		50	3/8	~600	
		63	3/8	~600	

Series AM2

Air Cylinder / Series AL/ALX

Standard Type	Bore Size (mm)	Stroke (mm)	Port Size (Rc)	Page
Basic Type : Series AL/ALX Double Rod Type	125	~ 1,000	1/2	A-138
	140	~ 1,000		
	160	~ 1,200	3/4	
	180	~ 2,000		
	200		1	
	250			
	300			

Series AL/ALX

Adjustable Stroke Cylinder / Extension Adjustable Type)	125	~ 1,000	1/2	A-152
Adjustable Stroke Cylinder / Retraction Adjustable Type)	140	~ 1,000		
With Coil Scraper : X104				
Double Stroke Cylinder / Single Rod Type	160	~ 1,200	3/4	
Double Stroke Cylinder / Double Rod Type	180	~ 2,000		
With Scraper : XC4	200		1	
Over Sized Rod : XB5				
High Temperature Cylinder : XB6	250			
Stainless Steel Rod : XC6	300			

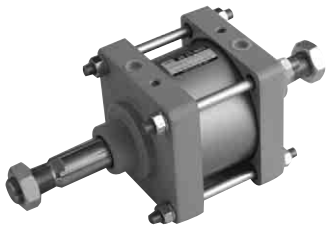

Series ALW

Compact Cylinder / Series AQ

Standard Type	Bore Size mm	Stroke mm	Port Size Rc	Page
Double Acting / Single Rod : AQ	12	~ 30	M5×0.8	A-170
Double Acting / Single Rod : ADQB (Built - in Magnet)	16			
Double Acting / Double Rod : AQW	20	~ 75		
Double Acting / Double Rod : ADQW (Built - in Magnet)	25			
Single Acting / Single Rod : AQ	32	~ 150	1/8	
Single Acting / Single Rod : ADQ (Built - in Magnet)	40			
Non - Rotating Rod Type : AQK	50	~ 150	1/4	
Non - Rotating Rod Type : ADQK (Built - in Magnet)	63			
Non - Rotating Rod / Single Rod : AQKW	80		3/8	
Non - Rotating Rod / Double Rod : ADQKW				
With intense - Magnetism Resistant Auto Switch : AQCP	100			

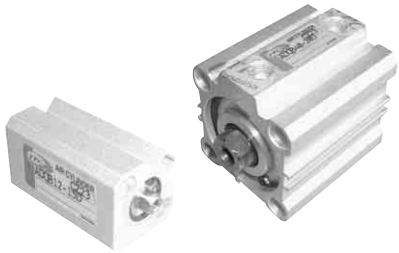

Series AQ

Adjustable Stroke Cylinder / Extension Adjustable Type)	12	~ 30	M5×0.8	A-211
	16			
Adjustable Stroke Cylinder / Retraction Adjustable Type)	20	~ 75		
Double Stroke Cylinder / Double Rod Type	25			
Double Stroke Cylinder / Single Rod Type	32	~ 150	1/8	
	40			
	50	~ 150	1/4	
	63			
	80		3/8	
	100			

Series AQW

CLAMP Cylinder / Series AJ

Standard Type	Bore Size (mm)	Stroke (mm)	Port Size (Rc)	Page
Basic Type : AJ	32	~ 150	1/8	A-162
	50		1/4	
With intense - Magnetism Resistant Auto Switch : TCKP1	63		3/8	

Series AJ/AJM

Guide Compact Cylinder / Series AG

Standard Type	Bore Size (mm)	Stroke (mm)	Port Size (Rc)	Page
Slide bearing : AGM	12	~ 100	M5×0.8	A-214
	16			
Ball bush bearing : AGL	20			
	25			
	32		1/8	
	40			
	50		1/4	
	63			
	80		3/8	
	100			

Series AG

Double Rod Cylinder / Series ADR

Standard Type	Bore Size (mm)	Stroke (mm)	Port Size (Rc)	Page
Basic Type : ADR	10	~ 100	M5×0.8	A-242
	16			
	20		1/8	
	25			

Series ADR

Guide Air Cylinder / Series AGX

Bore Size	20	25	32	40	Page
Fluid	Air				A-224
Cushion	· RUBBER Cushion · Air Cushion				
Port Size	Rc(PT)1/8	Rc(PT)1/8	Rc(PT)1/8	Rc(PT)1/4	
With Magnet	Standard				
Auto Switch	Auto Switch / W5				
Built - in Type					
Bellows	· Blank · Nylan Tarpoulin(60℃) · Neoprene Cloth(110℃)				

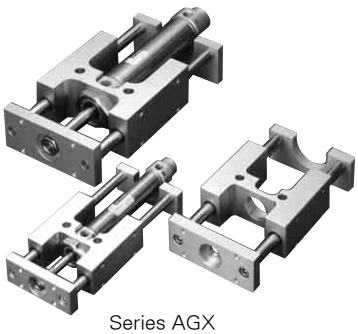

Series AGX

Magnet Type Rodless Cylinder / Series AMR

Standard Type	Bore size (mm)	Stroke (mm)	Port size (Rc)	Page
Basic Type : AMRB With Guide Type : AMRG	10	50~ 300	M5×0.8	A-251
	16			
	20	100~ 1,500	1/8	
	25			
	32	100~ 2,000	1/4	
	40			

Series AMR

Direct Mount Cylinder / Series ADM

Standard Type	Bore size (mm)	Stroke (mm)	Port size (Rc)	Page
Single Rod : ADM Double Rod : ADMW Non-Rotating Rod : ADMK Non-Rotating Rod / Double Rod : ADMKW		5~ 30	M5×0.8	A-229
	10			
	16			
	20	5~ 50	1/8	
	25			

Series ADM

Round Cylinder / Series ARD

Standard Type	Bore size (mm)	Stroke (mm)	Port size (Rc)	Page
Basic Type : ARD (Built-in Magnet, Bumper, Non-lube Standard)	32	25 ~ 450	1/8	A-158
	40	25 ~ 800		
	50	25 ~ 1,200	3/8	
	63	25 ~ 1,200		

Series ARD

Stopper Cylinder / Series AST

Page : A-259

Standard Type	Bore size (mm)	Stroke (mm)	Acting	Type
L1~L3: Lever Type R : Roller Type D : Direct Type	50	20, 30, 40	T : Single Acting D : Double Acting Z : Double Acting (With Spring)	Roller :R → MC Nylon M → Rolled Steel
	63	30, 40		
	80	30, 40		

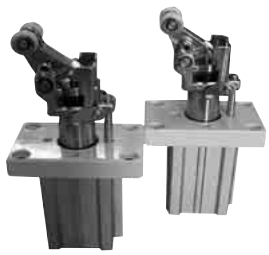

Series AST

Table Cylinder / Series NLCD

Standard Type	Bore size (mm)	Stroke (mm)	Port size (Rc)	Page
Double Rod (Horizontal)	ø6	10, 20, 30, 40, 50	M5 × 0.8	A-276
	ø8	10, 20, 30, 40, 50, 75		
	ø12	10, 20, 30, 40, 50, 75		
	ø16	10,20,30,40,50,75,100		
	ø20	10,20,30,40,50,75,100	1/8	
	ø25	10,20,30,40,50,75,100		

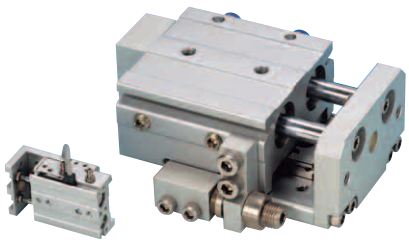

Series NLCD

TPC Cylinders

ITEM / TYPE	Air Cylinder Series ACP			Air Cylinder Series AS(AX)				Air Cylinder Series AM					Air Cylinder Series ALX			Air Cylinder Series AL				Compact Cylinder Series AQ										Air Cylinder Series AQ2C		Clamp Cylinder Series AJ	
	6	10	16	20	25	32(30)	40	40	50	63	80	100	125	140	160	180	200	250	300	12	16	20	25	32	40	50	63	80	100	50	63	50	63
Lubricated	—	—	—	-(○)	-(○)	-(○)	-(○)	○	○	○	○	○	○	○	○	○	○	○	○	—	—	—	—	—	—	—	—	—	—	—	—	—	—
Non-lube	○	○	○	○	○	○	○	○	○	○	○	○	○	○	○	○	○	○	○	○	○	○	○	○	○	○	○	○	○	○	○	○	○
Air-hydro	—	—	—	-(○)	-(○)	-(○)	-(○)	○	○	○	○	○	○	○	○	—	—	—	—	—	—	—	—	—	—	—	—	—	—	—	—	—	—
Double Rod-Type	○	○	○	○	○	○	○	○	○	○	○	○	○	○	○	○	○	○	○	—	—	○	○	○	○	○	○	○	○	—	—	—	—
Non-Rotating Rod-Type	—	—	—	○	○	○	○	○	○	○	—	—	—	—	—	—	—	—	—	—	—	○	○	○	○	○	○	—	—	—	—	—	—
Bellows Type	—	—	—	○	○	○	○	○	○	○	○	○	○	○	○	○	○	○	○	—	—	—	—	—	—	—	—	—	—	—	—	—	—
Auto S/W	○	○	○	○	○	○	○	○	○	○	○	○	○	○	○	—	—	—	—	○	○	○	○	○	○	○	○	○	○	○	○	○	○
Metal-Scraper	—	—	—	—	—	—	—	○	○	○	○	○	○	○	○	○	○	○	○	—	—	—	—	—	○	○	○	○	○	○	○	○	○
Rubber-Cushion	○	○	○	○	○	○	○	—	—	—	—	—	—	—	—	—	—	—	—	—	—	○	○	○	○	○	○	○	○	—	—	—	—
Air Cushion	—	—	—	○	○	○	○	○	○	○	○	○	○	○	○	○	○	○	○	—	—	—	—	—	—	—	—	—	—	—	—	○	○
End Look	—	—	—	—	○	○	○	○	○	○	○	○	—	—	—	—	—	—	—	—	—	—	—	—	—	—	—	—	—	—	—	—	—
Single Acting S	○	○	○	○	○	○	○	—	—	—	—	—	—	—	—	—	—	—	—	—	—	○	—	○	○	○	—	—	—	—	—	—	—
Single Acting T	○	○	○	○	○	○	○	—	—	—	—	—	—	—	—	—	—	—	—	—	—	○	—	○	○	○	—	—	—	—	—	—	—
Adjustable Stroke Cylinder XC8	—	—	—	○	○	○	○	○	○	○	○	○	○	○	○	○	○	○	○	—	—	○	—	○	○	○	○	○	○	—	—	—	—
Adjustable Stroke Cylinder XC9	—	—	—	○	○	○	○	○	○	○	○	○	○	○	○	○	○	○	—	—	—	○	—	○	○	○	○	○	○	—	—	—	—
Adjustable Stroke Cylinder XC10	—	—	—	○	○	○	○	○	○	○	○	○	○	○	○	○	○	○	○	—	—	○	—	○	○	○	○	○	○	—	—	—	—
Adjustable Stroke Cylinder XC11	—	—	—	○	○	○	○	○	○	○	○	○	○	○	○	○	○	○	○	—	—	○	—	○	○	○	○	○	○	—	—	—	—
Stainless Steel Rod	—	—	—	—	—	—	—	○	○	○	○	○	○	○	○	○	○	—	—	—	—	—	—	—	—	—	—	—	—	—	—	—	—
Tandem Type	—	—	—	○	○	○	○	○	○	○	○	○	○	○	○	○	○	○	○	—	—	○	—	○	○	○	○	○	○	—	—	—	—
X202 X203	—	—	—	—	—	—	—	—	—	—	—	—	—	—	—	—	—	—	—	—	—	○	—	○	○	○	○	—	—	—	—	—	—

TPC Cylinders

ITEM	With Intense-Magnetism Resistant Auto Switch						Brake Cylinder					Compact Guide Cylinder										Guide Cylinder				Rodless Cylinder								Round Cylinder				Double Rod Cylinder		
	Series AJM		Series ADQCP		Series AMP		Series AMB					Series AG										Series AGX				Series TCRL								Series ARD				Series ADR		
TYPE	50	63	50	63	50	63	40	50	63	80	100	12	16	20	25	32	40	50	63	80	100	20	25	32	40	16	20	25	32	40	50	63	80	32	40	50	63	10	16	25
Lubricated	–	–	–	–	–	–	–	–	–	–	–	–	–	–	–	–	–	–	–	–	–	–	–	–	–	–	–	–	–	–	–	–	–	–	–	–	–	–	–	–
Non-lube	○	○	○	○	○	○	○	○	○	○	○	○	○	○	○	○	○	○	○	○	○	○	○	○	○	○	○	○	○	○	○	○	○	○	○	○	○	○	○	○
Air-Hydro	–	–	–	–	–	–	–	–	–	–	–	–	–	–	–	–	–	–	–	–	–	–	–	–	–	–	–	–	–	–	–	–	–	–	–	–	–	–	–	–
Double Rod-Type	–	–	–	–	△	△	–	–	–	–	–	–	–	–	–	–	–	–	–	–	–	–	–	–	–	–	–	–	–	–	–	–	–	–	–	–	–	–	–	–
Non-Rotating Rod-Type	–	–	–	–	–	–	○	○	○	○	○	–	–	–	–	–	–	–	–	–	–	–	–	–	–	–	–	–	–	–	–	–	–	–	–	–	–	–	–	–
Bellows Type	–	–	–	–	○	○	○	○	○	○	○	–	–	–	–	–	–	–	–	–	–	–	–	–	–	–	–	–	–	–	–	–	–	–	–	–	–	–	–	–
Auto S/W	○	○	○	○	○	○	○	○	○	○	○	○	○	○	○	○	○	○	○	○	○	○	○	○	○	○	○	○	○	○	○	○	○	○	○	○	○	○	○	○
Metal-Scraper	○	○	○	○	○	○	–	–	–	–	–	–	–	–	–	–	–	–	–	–	–	–	–	–	–	–	–	–	–	–	–	–	–	–	–	–	–	–	–	–
Rubber-Cushion	–	–	–	–	–	–	–	–	–	–	–	○	○	○	○	○	○	○	○	○	○	–	–	–	–	–	–	–	–	–	–	–	–	○	○	○	○	–	–	–
Air Cushion	○	○	–	–	○	○	○	○	○	○	○	–	–	–	–	–	–	–	–	–	–	–	–	–	–	○	○	○	○	○	○	○	○	○	○	○	○	–	–	–
End Look	–	–	–	–	–	–	–	–	–	–	–	–	–	–	–	–	–	–	–	–	–	–	–	–	–	–	–	–	–	–	–	–	–	–	–	–	–	–	–	–
Single Acting S	–	–	–	–	–	–	–	–	–	–	–	–	–	–	–	–	–	–	–	–	–	–	–	–	–	–	–	–	–	–	–	–	–	–	–	–	–	–	–	–
Single Acting T	–	–	–	–	–	–	–	–	–	–	–	–	–	–	–	–	–	–	–	–	–	–	–	–	–	–	–	–	–	–	–	–	–	–	–	–	–	–	–	–
Adjustable Stroke Cylinder XC8	–	–	–	–	–	–	–	–	–	–	–	–	–	–	–	–	–	–	–	–	–	–	–	–	–	–	–	–	–	–	–	–	–	–	–	–	–	–	–	–
Adjustable Stroke Cylinder XC9	–	–	–	–	–	–	–	–	–	–	–	–	–	–	–	–	–	–	–	–	–	–	–	–	–	–	–	–	–	–	–	–	–	–	–	–	–	–	–	–
Adjustable Stroke Cylinder XC10	–	–	–	–	–	–	–	–	–	–	–	–	–	–	–	–	–	–	–	–	–	–	–	–	–	–	–	–	–	–	–	–	–	–	–	–	–	–	–	–
Adjustable Stroke Cylinder XC11	–	–	–	–	–	–	–	–	–	–	–	–	–	–	–	–	–	–	–	–	–	–	–	–	–	–	–	–	–	–	–	–	–	–	–	–	–	–	–	–
Stainless Steel Rod	–	–	–	–	–	–	–	–	–	–	–	–	–	–	–	–	–	–	–	–	–	–	–	–	–	–	–	–	–	–	–	–	–	–	–	–	–	–	–	–
Tandem Type	–	–	–	–	–	–	–	–	–	–	–	–	–	–	–	–	–	–	–	–	–	–	–	–	–	–	–	–	–	–	–	–	–	–	–	–	–	–	–	–
X202 X203	–	–	–	–	–	–	–	–	–	–	–	–	–	–	–	–	–	–	–	–	–	–	–	–	–	–	–	–	–	–	–	–	–	–	–	–	–	–	–	–

○ : Standard Type △ : Option Type – : N/A

Consult TPC When Magnet Type Rodless Cylinder(Series AMR), Direct Mount Cylinder(Series ADM) Are Needed

TPC STANDARD SYSTEM

CYLINDER		EQUIPMENTS				LOAD WGT. (kgf)		
		PIPING	SPEED CON	VALVE	SILENCER	30%	50%	75%
ACP1	6	ST0425	SP1201F-M5-04		SN120-M5	0.4	0.7	1.1
	10					1.2	2.0	2.9
	16					2.9	5.0	7.5
		ST0604	SP1201F-M5-06					
AX	20		SP2201F-01-06S	DS3000	SN101-01	4.7	7.8	11.7
	25					7.3	12.2	18.3
	32					11.9	19.9	30.0
	40					18.6	31.1	46.8
AM	40	ST0805	SP2201F-02-08S			18.4	31.0	46.8
	50	ST0604	SP2201F-03-06S			28.7	48.3	72.9
		ST0805	SP2201F-03-08S					
			SP3201F-03-08S					
		ST1065	SP3201F-03-10S					
	63	ST0604	SP3201F-03-06S			45.9	77.1	116.1
		ST0805	SP3201F-03-08S					
		ST1065	SP3201F-03-10S					
				DS5000	SN300-03			
	80		SP4201F-04-10S	DS3000	SN101-01	74.0	124.3	187.1
				DS5000	SN300-03			
		ST1208	SP4201F-04-12S					
	100	ST1065	SP4201F-04-10S			115.6	194.2	292.3
		ST1208	SP4201F-04-12S					
				DX2-FG				
		ST1612	SP4000-04	DS5000				
AL/ ALX	125	ST1208	SP4201F-04-12S			180.6	303.3	465.7
		ST1612	SP4000-04					
		ST 3/8	A*					
				DX2-FG				
				DS6000	C*			
	140	ST1208	SP4000-04	DS5000	SN300-03	227.2	381.2	573.6
		ST1612						
		SGP 3/8	A*	DX2-FG				
				DS6000	C*			
		SGP 1/2						
	160	SGP 3/8		DX2-FG	SN300-03	297.0	498.0	749.3
		SGP 1/2						
		SGP 3/8		DS6000	C*			
		SGP 1/2						
			B*	DS6000	D*			
		SGP 3/4						
	180	SGP 1/2	A*	DX2-FG	SN300-03	371.8	626.3	944.4
				DS6000	C*			
			B*	DS6000	D*			
		SGP 3/4						
	200	SGP 1/2	A*	DX2-FG	SN300-03	459.0	773.1	1,165.8
				DS6000	C*			
		SGP 3/4	B*	DS6000	D*			
	250					714.5	1,205.0	1,819.0
				57C-12				
		SGP 1		57C-13				
	300					1,027.3	1,734.3	2,618.0

* A:Effective Orifice123mm², B:258mm², C:160mm², D:270mm² More then

TPC STANDARD SYSTEM

CYLINDER		MAX. SPEED (mm/sec)			RES. TIME(sec)		
		30%	50%	75%	30%	50%	75%
ACP	6	1,191.36	702.22	116.23	0.34	0.58	3.52
	10	1,183.72	779.04	382.70	0.19	0.29	0.59
	16	714.64	529.29	284.54	0.24	0.32	0.60
		834.69	600.80	315.87	0.26	.037	0.70
AX	20	804.97	596.25	330.56	0.24	0.33	0.59
	25	665.59	506.84	287.14	0.26	0.35	0.61
	32	446.10	352.20	207.84	0.36	0.46	0.77
	40	497.16	389.85	228.01	0.31	0.39	0.68
AM	40	620.24	476.19	272.65	0.26	0.34	0.59
	50	330.74	265.14	158.85	0.45	0.56	0.94
		422.17	334.68	198.01	0.36	0.46	0.78
		503.94	394.75	230.56	0.31	0.39	0.67
		625.30	479.64	274.30	0.26	0.34	0.60
	63	229.05	185.37	112.31	0.63	0.78	1.29
		309.92	249.02	149.58	0.48	0.60	0.99
		394.53	313.94	186.50	0.39	0.49	0.82
		497.57	390.18	228.15	0.31	0.39	0.67
	80	279.17	224.98	135.62	0.53	0.66	1.10
		389.66	310.24	184.44	0.38	0.48	0.81
		500.82	392.52	229.41	0.31	0.39	0.67
	100	219.35	204.51	123.60	0.66	0.71	1.18
		330.71	265.12	158.83	0.45	0.56	0.93
		336.71	269.80	161.52	0.44	0.55	0.92
		379.94	302.86	180.27	0.42	0.52	0.88
		539.40	420.10	243.91	0.29	0.38	0.65
AL/ ALX	125	213.61	173.09	105.01	0.68	0.84	1.38
		255.88	206.64	124.88	0.59	0.73	1.22
		358.81	286.78	162.40	0.42	0.53	0.93
		415.94	330.07	185.33	0.37	0.46	0.83
		488.52	354.32	197.92	0.34	0.43	0.77
		490.74	385.25	213.69	0.31	0.40	0.72
	140	166.68	135.46	82.47	0.86	1.06	1.75
		201.62	163.49	99.27	0.74	0.91	1.50
		308.91	248.22	149.10	0.41	0.40	0.72
		345.97	276.90	165.56	0.43	0.54	0.91
		502.47	393.70	230.00	0.30	0.38	0.65
		601.97	463.76	266.32	0.26	0.34	0.59
	160	277.06	223.34	134.66	0.53	0.66	1.10
		300.86	241.98	145.51	0.51	0.63	1.05
		393.94	313.51	186.26	0.38	0.47	0.79
		477.90	375.91	220.51	0.32	0.41	0.69
		624.96	479.48	274.26	0.24	0.32	0.56
		745.51	558.30	312.32	0.22	0.29	0.52
	180	236.54	191.32	115.81	0.63	0.78	1.29
		353.84	282.94	169.00	0.42	0.53	0.89
		513.41	401.58	234.17	0.29	0.37	0.64
		623.20	478.24	273.59	0.25	0.33	0.58
	200	192.54	156.23	94.93	0.77	0.95	1.56
		289.79	233.31	140.46	0.51	0.63	1.05
		522.87	408.39	237.77	0.29	0.38	0.65
	250	347.65	278.19	166.32	0.43	0.54	0.90
		382.35	304.70	181.33	0.39	0.49	0.82
		417.14	330.93	195.96	0.37	0.47	0.79
		444.06	350.98	206.75	0.35	0.44	0.75
	300	315.72	253.52	152.14	0.48	0.59	0.99

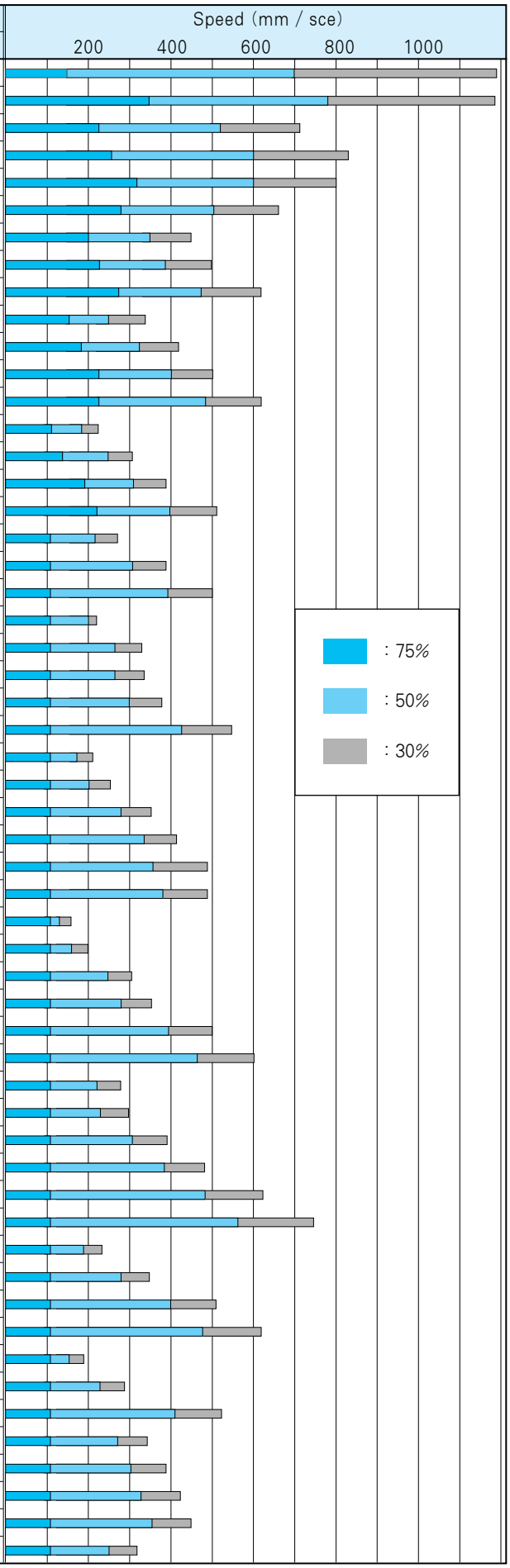

Air Cylinder Theoretical Force Table

■ Extend

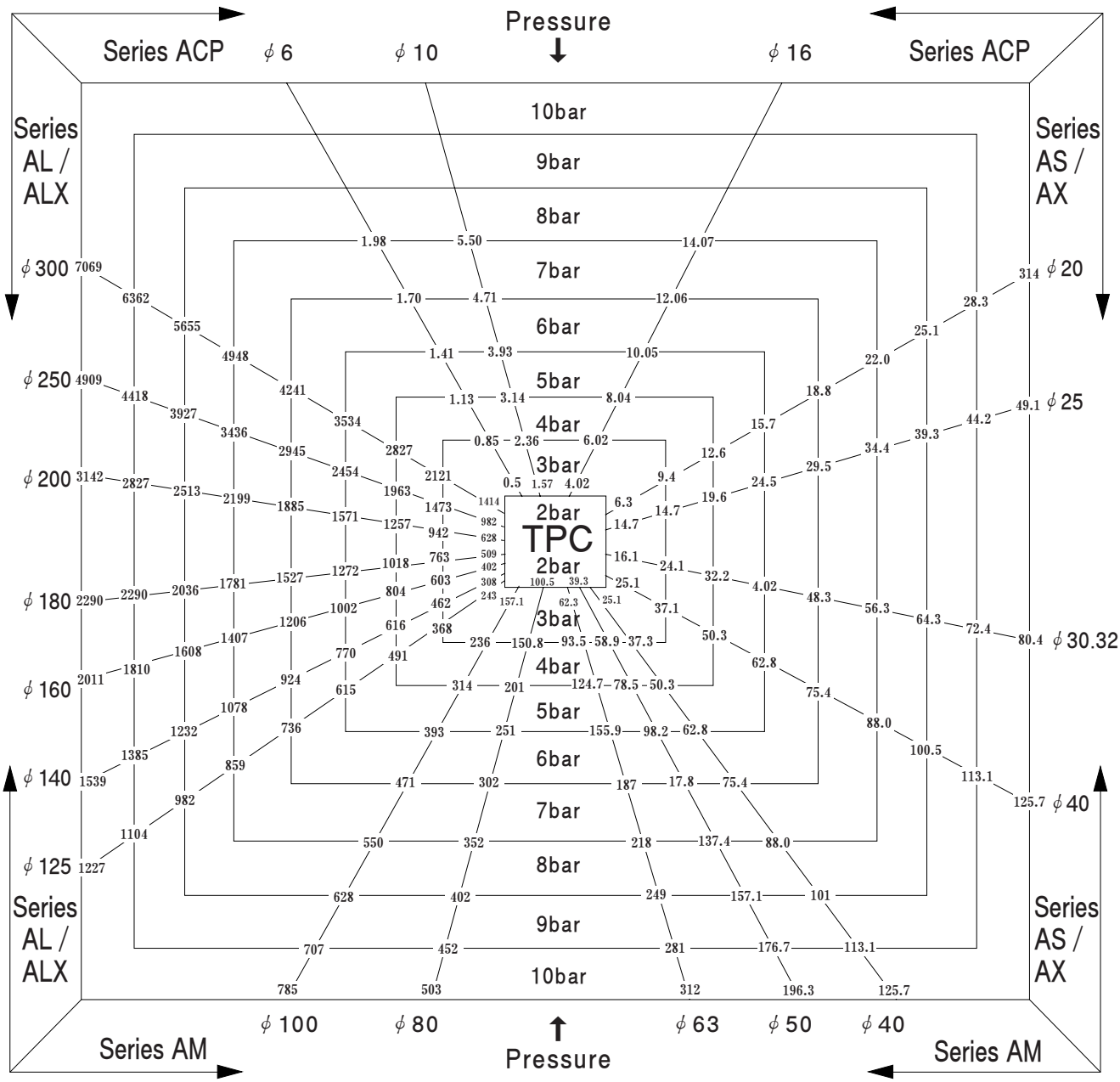

■ (ex)5kgf/㎠ Cylinder 300ϕ : Force 3,340㎏

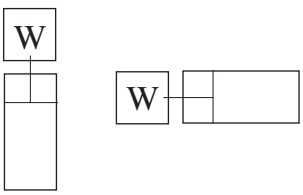

** η= 0.5 (Load Factor)

※ 1bar = 1.02kgf/㎠, 1kgf/㎠=0.98bar

Air Cylinder Theoretical Force Table

■ Return

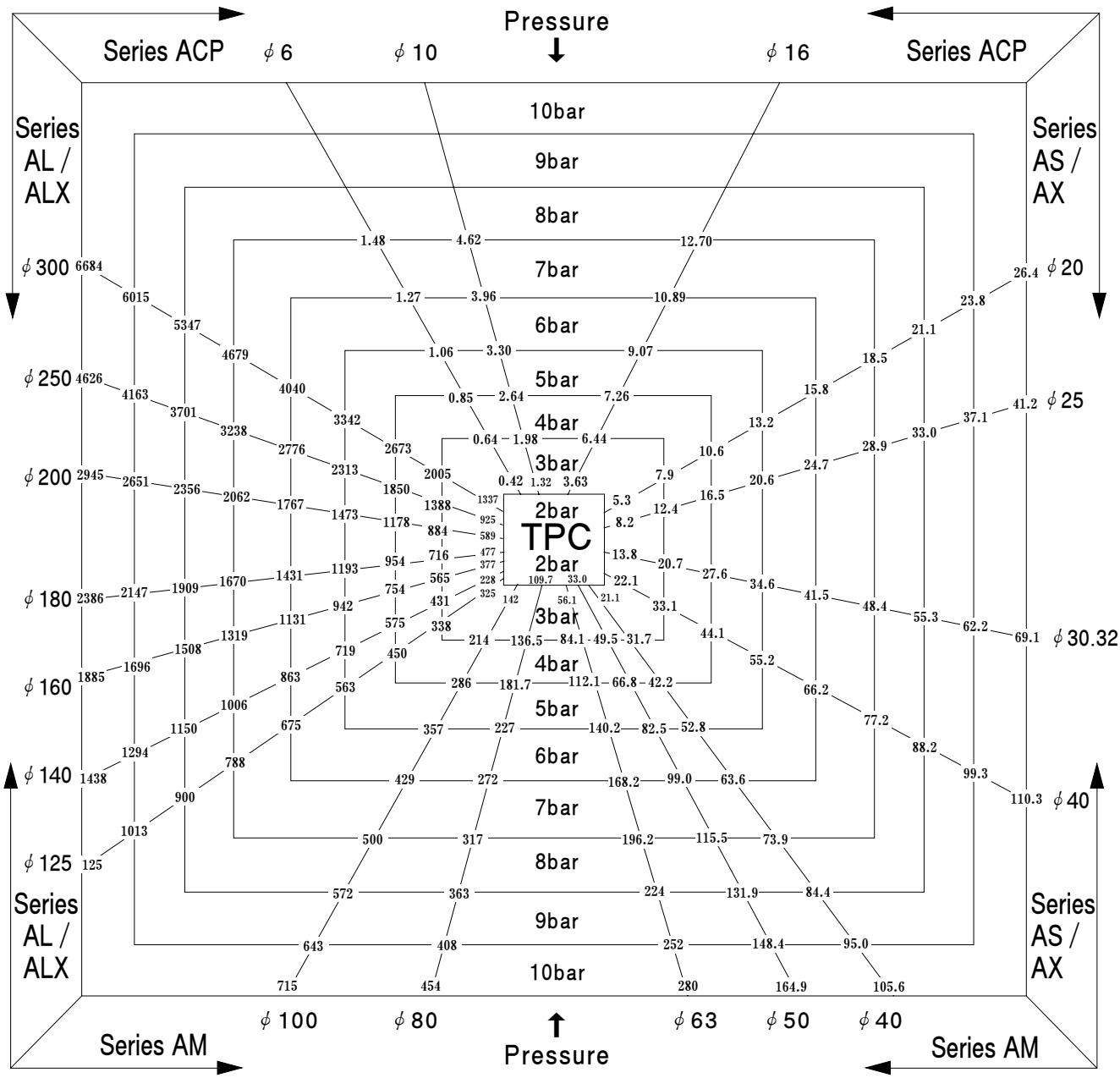

■ (ex)5kgf/㎠ Cylinder 300ϕ : Force 3,340㎏

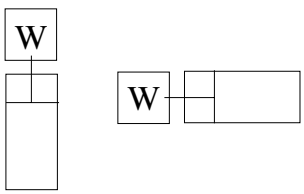

** η= 0.5 (Load Factor)

※ 1bar = 1.02kgf/㎠, 1kgf/㎠=0.98bar

TPC PNEUMATICS

TPC Air Cylinder Drive System

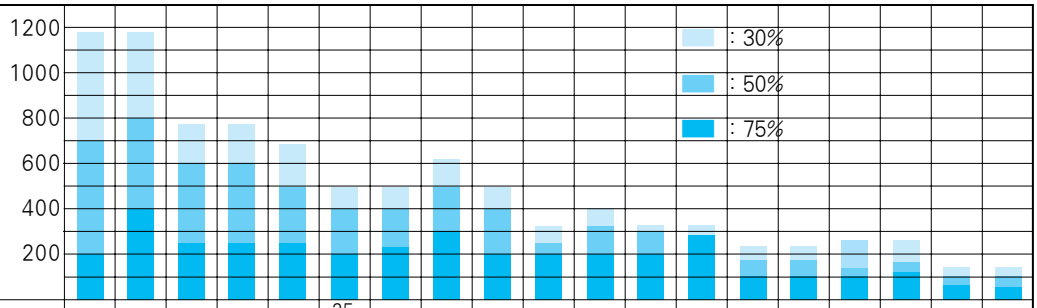

Bore Size(Ø)	6	10	16	20	25	25 30	40	40	50	63	80	100	125	140	160	180	200	250	300
Applicable Model	ACP			AS AX				AM					ALX			AL			
Port Size Rc(PT)	M5			1/8(01)			1/4(02)		3/8(03)		1/2(04)				3/4(06)			1	
Applicable Solenoid Valve — Standard	Series DV2000			Series DS2000		Series DS3000					Series DS5000				Series DX2		Series DS6000		
Applicable Solenoid Valve — Option	DV2000. DS2000 DS3000					DS5000 DX2							DS6000						
Solenoid Valve Effcitive Orifice factor(mm²)	0.2(3.6)			0.53 (9.5)		0.8(14.4)					2.8(50)				3.4(61)		5.0 (90)		
Cylinder Force (kg) — Operating Pressure 7kgf/cm² — Out	2.0	5.5	14	2.2	34	56	88	88	137	218	352	550	859	1078	1407	1871	2199	3436	4948
Cylinder Force (kg) — Operating Pressure 7kgf/cm² — In	1.5	4.6	12.7	18.5	30	48	77	74	115	196	317	500	788	1007	1319	1670	2062	3238	4679
Cylinder Force (kg) — Operating Pressure 5kgf/cm² — Out	1.4	3.9	10.1	15.7	24.5	40.2	62.8	62.8	98	156	251	393	615	770	1005	1272	1571	2454	3534
Cylinder Force (kg) — Operating Pressure 5kgf/cm² — In	1.1	3.3	10	13.2	20.6	34.6	55.2	55.2	83	140	227	357	563	719	942	1193	1472	2313	3342
Applicable Speed Controiier — One touch — METER-OUT Type	SP1201F-M5 - **			SP2201F-01 - **			SP2201 F-02- **		SP3201 F-03- **		SP4201F-04- **								
Applicable Speed Controiier — One touch — METER-IN OUT Type	SP1211F-M5 - **			SP2211F-01 - **			SP2211 F-02- **		SP3211 F-03- **		SP4201F-04- **								
Applicable Speed Controiier — Two touch — Elbow	SPM120						SPM220		SPM320		SPM420								
Applicable Speed Controiier — Two touch — Straight	SP4000-02								SP000 -03		SP4000-04								
Tube	ST0402**-** ST0425**-**				**-**		ST0604 **-**		ST0805 **-**		ST0805 **-**		ST1208 **-**						
Piston area	4.9						12.6		19.6		44		503			366		598	
Unit(F.R.L)	Series PC2000					Series PC3000				Series PC4000								Series PC5000	
Auto s/w	W5, DC24,AC110/220V						W3, DC24V, AC110/220V												
Operating Pressure (kgf/cm²)	0.5~8.4			1~9														1~10.5	
Silencer	SN120-M5			SN101-01		SN110-01					SN300-03				SN400-04		SN500-06		
Cylinder Speed (mm/cm²) — A load Factor 30%	1191	1183	714	804	665	446	497	630	503	309	389	219	213	166	277	236	289	250	180
Cylinder Speed (mm/cm²) — A load Factor 50%	702	779	529	596	506	352	389	476	394	249	310	204	173	135	223	191	233	210	100
Cylinder Speed (mm/cm²) — A load Factor 75%	116	382	284	330	287	207	228	272	230	149	184	123	105	82	134	115	140	120	90
RES. Time (sec) — A load Factor 30%	0.34	0.19	0.24	0.26	0.24	0.36	0.31	0.26	0.45	0.63	0.38	0.45	0.68	0.86	0.53	0.63	0.51	0.51	0.51
RES. Time (sec) — A load Factor 50%	0.58	0.29	0.32	0.37	0.33	0.46	0.39	0.34	0.56	0.78	0.48	0.56	0.84	1.06	0.66	0.78	0.63	0.63	0.63
RES. Time (sec) — A load Factor 75%	3.52	0.59	060	0.70	0.59	0.77	0.68	0.59	0.94	1.29	0.81	0.93	1.38	1.75	1.10	1.29	1.05	1.05	1.05

Cylinder Speed Chart

Body Ported

Series	Cylinder speed (mm/s)	Cylinder Bore Size (mm)											
		Series ACP Pressure 0.5MPa Load factor 50% Cylinder Stroke 100mm			Series AX Pressure 0.5MPa Load factor 50% Cylinder Stroke 300mm				Series AM Pressure 0.5MPa Load factor 50% Cylinder Stroke 500mm				
		ø 6	ø 10	ø 16	ø 20	ø 25	ø 32	ø 40	ø 40	ø 50	ø 63	ø 80	ø 100
DV1120 - M5 Cv=0.20	100	■	■	■	■	■	■	■	■	■			
	200	■	■	■	■	■	■	■	■				
	300	■	■	■	■	■	■						
	400	■	■	■	■	■							
	500		■	■	■								
DV3120 - 01 Cv=0.50	100	■	■	■	■	■	■	■	■	■	■	■	
	200	■	■	■	■	■	■	■	■	■			
	300	■	■	■	■	■	■	■	■	■			
	400	■	■	■	■	■	■		■				
	500		■	■	■	■			■				
	600		■	■	■	■			■				
	700				■								
DV4120 - 02 Cv=0.90	100	■	■	■	■	■	■	■	■	■	■	■	■
	200	■	■	■	■	■	■	■	■	■	■	■	
	300	■	■	■	■	■	■	■	■	■	■	■	
	400	■	■	■	■	■	■	■	■	■	■		
	500		■	■	■	■			■	■			
	600		■	■	■	■			■				
	700				■	■							

Base Mounted (with sub–plate)

Series	Cylinder speed (mm/s)	Cylinder Bore Size (mm)											
		Series ACP Pressure 0.5MPa Load factor 50% Cylinder Stroke 100mm			Series AX Pressure 0.5MPa Load factor 50% Cylinder Stroke 300mm				Series AM Pressure 0.5MPa Load factor 50% Cylinder Stroke 500mm				
		ø 6	ø 10	ø 16	ø 20	ø 25	ø 32	ø 40	ø 40	ø 50	ø 63	ø 80	ø 100
DV1140 - M5 Cv=0.22	100	■	■	■	■	■	■	■	■	■			
	200	■	■	■	■	■	■	■	■				
	300	■	■	■	■	■	■	■	■				
	400	■	■	■	■	■							
	500		■	■	■	■							
	600		■	■	■								
	700				■								
DV3140 -01 Cv=0.53	100	■	■	■	■	■	■	■	■	■	■	■	■
	200	■	■	■	■	■	■	■	■	■	■	■	
	300	■	■	■	■	■	■	■	■	■	■		
	400	■	■	■	■	■	■	■	■	■			
	500		■	■	■	■			■	■			
	600		■	■	■	■			■	■			
	700				■	■			■				
DV4140 - 02 Cv=0.90	100	■	■	■	■	■	■	■	■	■	■	■	■
	200	■	■	■	■	■	■	■	■	■	■	■	
	300	■	■	■	■	■	■	■	■	■	■	■	
	400	■	■	■	■	■	■	■	■	■	■		
	500		■	■	■	■			■	■			
	600		■	■	■	■			■	■			
	700				■	■			■	■			

Conditions

Body Ported		Series ACP	Series AX	Series AM
DV1120 - M5 Cv=0.20	Tube bore×length	ø4 × 1m		
	Speed controller	SP1201F-M5-04		
	Silencer	SN120-M5		
DV3120 - 01 Cv=0.50	Tube bore×length	ø6 × 1m	ø8 × 1m	
	Speed controller	SP1201F-M5-06	SP3201F-03-08S	
	Silencer	SN110-01		
DV4120 - 02 Cv=0.90	Tube bore×length	ø6 × 1m	ø10 × 1m	
	Speed controller	SP1201F-M5-06	SP3201F-04-10S	
	Silencer	SN200-02		

Base Mounted		Series ACP	Series AX	Series AM
DV1140 - M5 Cv=0.22	Tube bore×length	ø4 × 1m		
	Speed controller	SP1201F-M5-04		
	Silencer	SN110-01		
DV3140 - 01 Cv=0.53	Tube bore×length	ø6 × 1m	ø8 × 1m	
	Speed controller	SP1201F-M5-06	SP3201F-03-08S	
	Silencer	SN110-01		
DV4140 - 02 Cv=0.90	Tube bore×length	ø6 × 1m	ø10 × 1m	ø12 × 1m
	Speed controller	SP1201F-M5-06	SP4201F-04-10S	SP4201F-04-12S
	Silencer	SN200-02		

Cylinder Speed, Absorbable Kinetic Energy

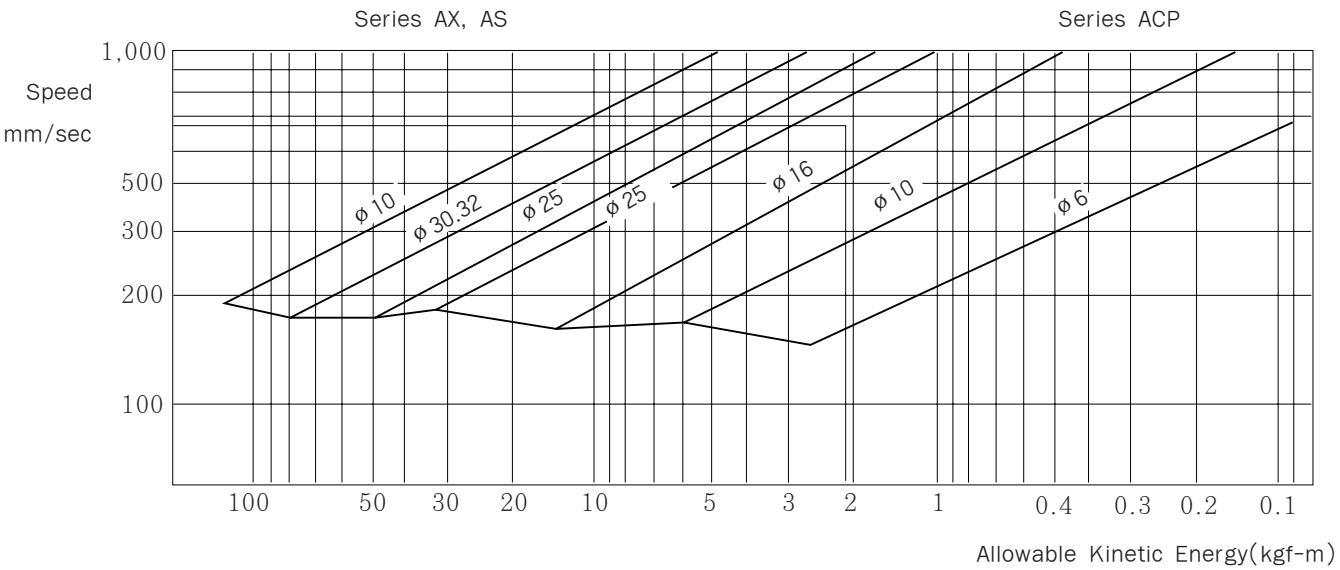

ex)Cylinder ø 20 energy 2Kg → 750mm/sec

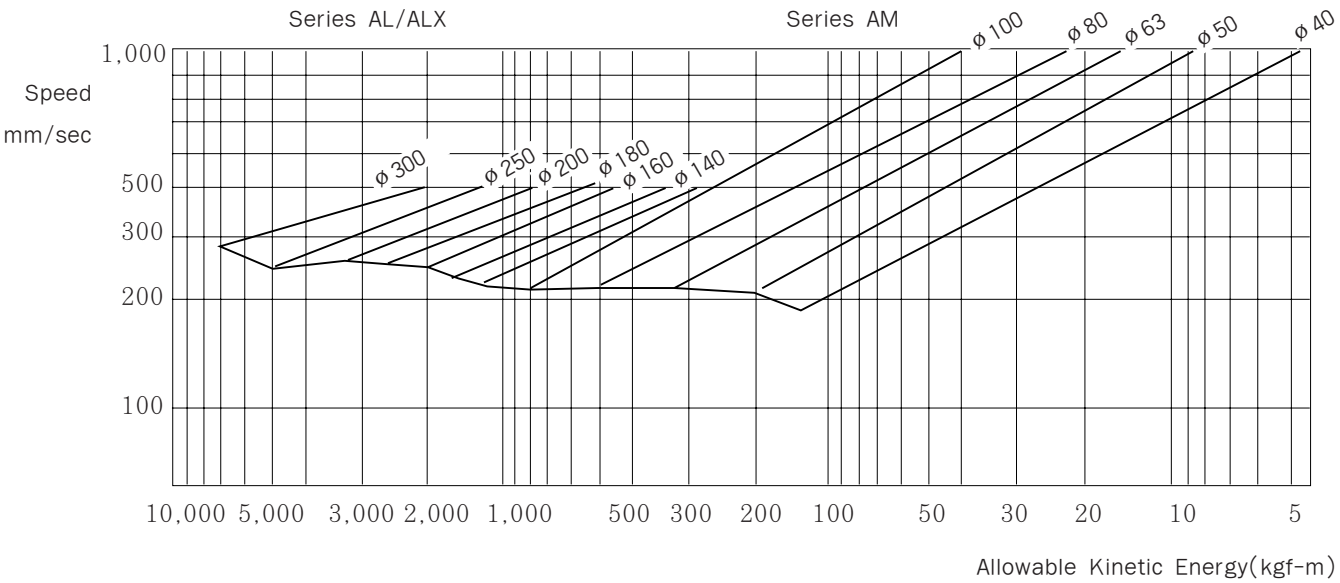

Air Cylinder Theoretical Force Table

Double acting cylinder

Unit: N

Series	Bore Size (mm)	Rod Size (mm)	Operating direction	Piston area (mm²)	Operating pressure (MPa)								
					0.2	0.3	0.4	0.5	0.6	0.7	0.8	0.9	1.0
ACP	6	3	OUT	28.3	5.66	8.49	11.3	14.2	17.0	19.8	-	-	-
			IN	21.2	4.24	6.36	8.48	10.6	12.7	14.8	-	-	-
	10	4	OUT	78.5	15.7	23.6	31.4	39.3	47.1	55.0	-	-	-
			IN	66.0	13.2	19.8	26.4	33.0	39.6	46.2	-	-	-
	16	5	OUT	201	40.2	60.3	80.4	101	121	141	-	-	-
			IN	181	36.2	54.3	72.4	90.5	109	127	-	-	-
AX	20	8	OUT	314	62.8	94.2	126	157	188	220	251	283	314
			IN	264	52.8	79.2	106	132	158	185	211	238	264
	25	10	OUT	491	98.2	147	196	246	295	344	393	442	491
			IN	412	82.4	124	165	206	247	288	330	371	412
	32	12	OUT	804	161	241	322	402	482	563	643	724	804
			IN	691	138	207	276	346	415	484	553	622	691
	40	14	OUT	1260	252	378	504	630	756	882	1010	1130	1260
			IN	1100	220	330	440	550	660	770	880	990	1100
AM	40	16	OUT	1260	252	378	504	630	756	882	1010	1130	1260
			IN	1060	212	318	424	530	636	742	848	954	1060
	50	20	OUT	1960	392	588	784	980	1180	1370	1570	1760	1960
			IN	1650	330	495	660	825	990	1160	1320	1490	1650
	63	20	OUT	3120	624	936	1250	1560	1870	2180	2500	2810	3120
			IN	2800	560	840	1120	1400	1680	1960	2240	2520	2800
	80	25	OUT	5030	1010	1510	2010	2520	3020	3520	4020	4530	5030
			IN	4540	908	1360	1820	2270	2720	3180	3630	4090	4540
	100	30	OUT	7850	1570	2360	3140	3930	4710	5500	6280	7070	7850
			IN	7150	1430	2150	2860	3580	4290	5010	5720	6440	7150
AL/ ALX	125	36	OUT	12300	2460	3690	4920	6150	7380	8610	9840	11100	12300
			IN	11300	2260	3390	4520	5650	6780	7910	9040	10200	11300
	140	36	OUT	15400	3080	4620	6160	7700	9240	10800	12300	13900	15400
			IN	14400	2880	4320	5760	7200	8640	10100	11500	13000	14400
	160	40	OUT	20100	4020	6030	8040	10100	12100	14100	16100	18100	20100
			IN	18800	3760	5640	7520	9400	11300	13200	15000	16900	18800
	180	45	OUT	25400	5080	7620	10200	12700	15200	17800	20300	22900	25400
			IN	23900	4780	7170	9560	12000	14300	16700	19100	21500	23900
	200	50	OUT	31400	6280	9420	12600	15700	18800	22000	25100	28300	31400
			IN	29500	5900	8850	11800	14800	17700	20700	23600	26600	29500
	250	60	OUT	49100	9820	14700	19600	24600	29500	34400	39300	44200	49100
			IN	46300	9260	13900	18500	23200	27800	32400	37000	41700	46300
	300	70	OUT	70700	14100	21200	28300	25400	42400	49500	56600	63600	70700
			IN	66800	13400	20000	26700	33400	40100	46800	53400	60100	66800

Single acting cylinder

Unit: N

Series	Bore Size (mm)	Rod Size (mm)	Operating direction	Piston area (mm²)	Operating pressure (MPa)								
					0.2	0.3	0.4	0.5	0.6	0.7	0.8	0.9	1.0
ACP	6	3	OUT	28.3	1.94	4.77	7.60	10.4	13.3	16.1	-	-	-
			IN	-					1.77				
	10	4	OUT	78.5	8.84	16.7	24.5	32.4	40.2	48.1	-	-	-
			IN	-					3.53				
	16	5	OUT	201	26.0	46.1	66.2	86.3	106.4	126.5	-	-	-
			IN	-					6.86				
AX	20	8	OUT	314	23.8	55.2	87	118	149	181	212	244	275
			IN	-					7.8				
	25	10	OUT	491	51.2	100	149	199	248	297	346	395	444
			IN	-					14				
	32	12	OUT	804	94	174	255	335	415	496	576	657	737
			IN	-					15				
	40	14	OUT	1260	176	302	428	554	680	806	934	1054	1184
			IN	-					24				

① In case of the extension side, theoretical force of single acting cylinder is a valve taken secondary mounting load of the spring off theoretical force of double acting cylinder. In case of the retraction side, take primany mounting load of the spring.

② Avoid loading the cylinder on the retraction side.

International Unit Systems (SI Units)

Major SI Units

No	Description	Symbol	Conventional unit→SI unit	SI unit→Conventional unit
1	Pressure	MPa	1kgf/cm²≒0.098MPa	1MPa≒10.2kgf/cm²
2	Force/Load	N	1kgf/cm²≒9.8N	1N≒0.102kgf
3	Moment of force	N · m	1kgf · m≒9.8N · m	1N · m≒0.102kgf · m
4	Vacuum pressure	- KPa	-1mmHg≒-0.133kPa	-1kPa≒-7.5mmHg
5	Moment of inertia	kg · m²	1kgf · cm · S²≒0.098kg · m²	1kgf · m²≒10.2kgf · cm · S²
6	Kinetic energy	J	1kgf · cm≒0.098J	1J≒10.2kgf · cm

① Pressure MPa→kgf/cm²(1MPa≒10.2kgf/cm²)

MPa	0.001	0.002	0.003	0.004	0.005	0.006	0.007	0.008	0.009	0.01	0.011	0.012	0.013	0.014	0.015	0.016	0.017	0.018	0.019
kgf/cm²	0.01	0.02	0.03	0.04	0.05	0.06	0.07	0.08	0.09	0.1	0.11	0.12	0.13	0.14	0.15	0.16	0.17	0.18	0.19
MPa	0.02	0.03	0.04	0.05	0.06	0.07	0.08	0.09	0.1	0.11	0.12	0.13	0.14	0.15	0.16	0.17	0.18	0.19	0.2
kgf/cm²	0.2	0.31	0.41	0.51	0.61	0.71	0.82	0.92	1.0	1.1	1.2	1.3	1.4	1.5	1.6	1.7	1.8	1.9	2.0
MPa	0.3	0.4	0.5	0.6	0.7	0.8	0.9	1.0	1.1	1.2	1.3	1.4	1.5	1.6	1.7	1.8	1.9	2.0	2.5
kgf/cm²	3.1	4.1	5.1	6.1	7.1	8.2	9.2	10.2	11.2	12.2	13.3	14.3	15.3	16.3	17.3	18.4	19.4	20.4	25.5
MPa	3.0	3.5	4.0	4.5	5.0	5.5	6.0	6.5	7.0	7.5	8.0	8.5	9.0	9.9	10	20	30	40	50
kgf/cm²	30.6	35.7	40.8	45.9	51.0	56.1	61.2	66.3	71.4	76.5	81.6	86.7	91.8	101.0	102	204	306	408	510

② Force/Load N→kgf(1N≒0.102kgf)

N	0.1	0.2	0.3	0.4	0.5	0.6	0.7	0.8	0.9	1.0	1.1	1.2	1.3	1.4	1.5	1.6	1.7	1.8	1.9
kgf	0.01	0.02	0.03	0.04	0.05	0.06	0.07	0.08	0.09	0.1	0.11	0.12	0.13	0.14	0.15	0.16	0.17	0.18	0.19
N	2	3	4	5	6	7	8	9	10	11	12	13	14	15	16	17	18	19	20
kgf	0.2	0.3	0.4	0.5	0.6	0.7	0.8	0.9	1.0	1.1	1.2	1.3	1.4	1.5	1.6	1.7	1.8	1.9	2.0
N	30	40	50	60	70	80	90	100	110	120	130	140	150	160	170	180	190	200	250
kgf	3	4	5	6	7	8	9	10	11	12	13	14	15	16	17	18	19	20	25
N	300	350	400	450	500	550	600	650	700	750	800	850	900	950	1,000	2,000	3,000	4,000	5,000
kgf	30	35	40	45	50	55	60	65	70	75	80	85	90	95	100	200	300	400	500

Actuator

- Air Cylinder Series ACP A-3
- Air Cylinder Series AX A-21
- Air Cylinder Series AS A-90
- Air Cylinder Series AM A-108
- Air Cylinder Series AM2 ..... A-128
- Air Cylinder Series AL/ALX A-138
- Round Cylinder Series ARD A-158
- Clamp Cylinder Series AJ A-162
- Compact Cylinder Series AQ A-170
- Compact Guide Cylinder Series AG A-214
- Guide Cylinder/Guide Unit Series AGX/GX A-224
- Direct Mount Cylinder Series ADM A-229
- Double Rod Cylinder Series ADR A-242
- Magnet Type Rodless Cylinder Series AMR A-251
- Stopper Cylinder Series AST A-259
- Table Cylinder Series NLCD A-276

Series ACP

Standard Type/Double Acting : Single Rod

Bore Size(mm) : ø6, ø10, ø16

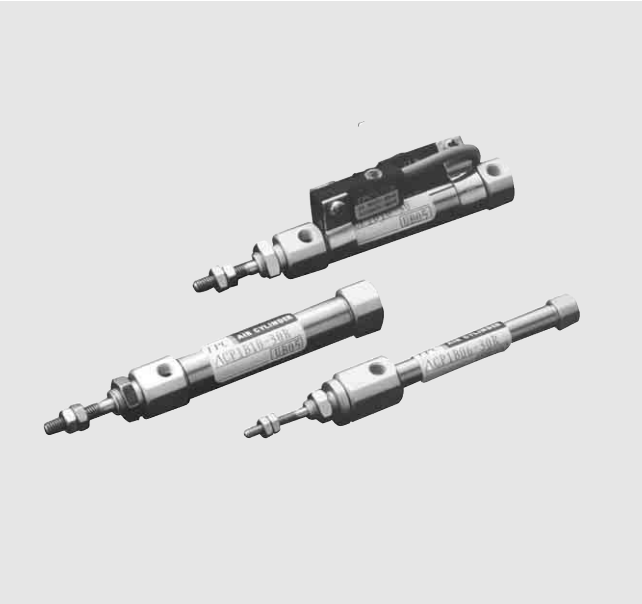

- STAINLESS STEEL BODY
- HIGH CYCLE LIFE
- LOW BREAKAWAY
- BUMPERS STANDARD
- BUILT IN MAGNET
- COMPACT LIGHT DESIGN
- MANUFACTURING CERTIFIED TO ISO9001/ 9002 STANDARDS

Symbol

Double Acting/Single Rod

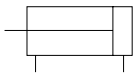

How to Order

ACP B 16 — 30 R — ○ — W5 ○

1 2 3 4 5 6 7 8

1 Air cylinder
Built-in magnet, Rubber cushions are Standard

2 Mounting
B : Standard type
L : Axial foot type
F : Rod side flange type
D : Double clevis type (Except for ø6)

3 Bore Size(mm)
6 : ø6
10 : ø10
16 : ø16

4 Stroke(mm)
※ For Stroke Refer to Page A-4

5 Port Location on Head Cover

Symbol \ Bore size	ø6	ø10, ø16
R	-	in-line
Blank	in-line	Rear Port

6 Special Options
Blank : Standard
XC16 : Copper-free

7 Applicable Auto Switch
(Band mounted type)
Blank : without Switch
W5 : Reed Switch(Lead wire of 0.5m)
W5L : Reed Switch(Lead wire of 3m)

8 Number of Switches
Blank : 2 pcs.
S : 1 pc.
N : (n) pcs.

PART No. of Mounting Bracket

Mounting bracket	Bore Size(mm)		
	ø6	ø10	ø16
Foot	TC1P006-19	TC1P010-19	TC1P016-19
Flange	TC1P006-20	TC1P010-20	TC1P016-20

PART No. of Auto Switch Mounting Band

Bore size	PART No. of Auto Switch Mounting Band	Note
ø6	TC1P-006	Common use to all of W5 types
ø10	TC1P-010	
ø16	TC1P-016	

Standard Type/Single Acting : Single Rod/Series ACPS

Specifications

Action		Double Acting Single Rod
Fluid		Air
Proof Pressure		10.5kgf/㎠ (1.05MPa)
Max. Operating Pressure		7.0kgf/㎠ (0.70MPa)
Min. Operating Pressure	ø6	1.2kgf/㎠ (0.12MPa)
	ø10, ø16	0.6kgf/㎠ (0.06MPa)
Ambient and Fluid Temperature		5~60℃
Cushion		Rubber Cushion (Standard)
Lubrication		None (Non-Lube)
Piston Speed		50~750 mm/sec

Auto Switch Specification

Mounting	Bore Size	Reed Switch
		Grommet
Band Mounted Type	ø6, ø10, ø16	W5 Type

Standard stroke

Bore size	Standard Stroke (mm)
ø6	5,10, 15, 20, 25, 30, 35, 40, 45, 50, 60, 75, 100
ø10	5,10, 15, 20, 25, 30, 35, 40, 45, 50, 60, 75, 100, 125, 150
ø16	5,10, 15, 20, 25, 30, 35, 40, 45, 50, 60, 75, 100, 125, 150, 175, 200

Mounting and Accessories

Mounting		Basic type	Axial foot type	Rod side flange type	Double clevis type
Standard	Mounting nut	●	●	●	–
	Rod end nut	●	●	●	●
	Clevis pin	–	–	–	●
Option	Single knuckle joint	●	–	●	●
	Double knuckle joint(with pin)	●	●	●	●
	T mounting	–	–	–	●

Port Location On Head Cover

Perpendicular to the cylinder axis or in-line with the cylinder axis locations are available for basic type.
(ø6 is not available in perpendicular type)

In-line Angle 90°

Weight Table

gf

Bore size(mm)		ø6	ø10	ø16
※ Basic Weight		15	24	55
Additional Weight for each 15mm of stroke		2	4	6.5
Mounting bracket Weight	Foot type	7	7	19
	Rod side flange type	5	5	13
	※※ Double clevis type(with pin)	-	2	8

※ Including the weights of mounting nut and rod end nut in the reference weight.
※ ※ Doulble clevis type is not included with mounting nut.

Construction/Parts List

ACPB 6

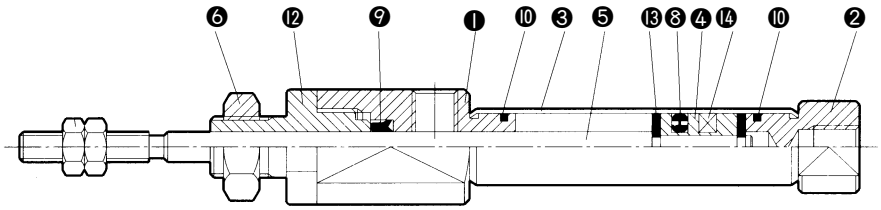

ACPB 10, 16

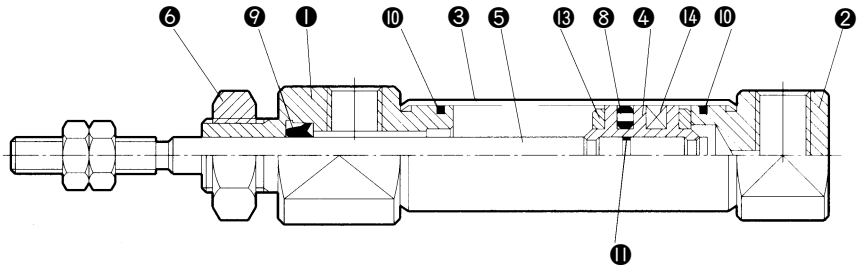

Parts List

No.	Description	Material	Note
❶	Rod cover	Aluminum Alloy	White Alumite
❷	Head cover	Aluminum Alloy	White Alumite
❸	Cylinder tube	Stainless Steel	–
❹	Piston	Brass	–
❺	Piston rod	Stainless Steel	-
❻	Mounting nut	Brass	Nickel Plated
❽	Piston packing	NBR	-

No.	Description	Material	Note
❾	Rod Packing	NBR	–
❿	Tube Gasket	NBR	–
⓫	Piston Gasket	NBR	–
⓬	Packing Retainer	Aluminum Alloy	White Alumite
⓭	Bumper	Urethane	–
⓮	Magnet	–	–

Standard Type (ACPB)

ACPB — Bore size — Stroke — Port Location on Head Cover

ACPB 6

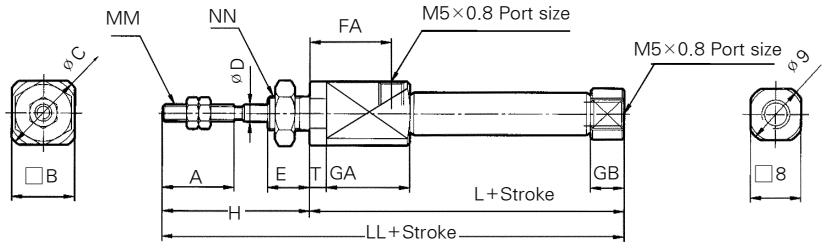

ACPB 10, 16

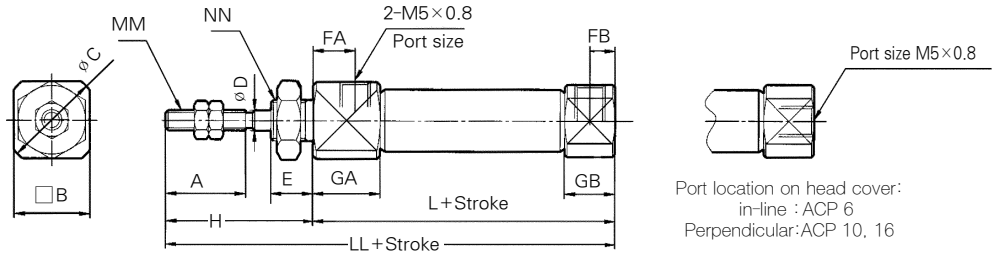

(mm)

Bore size	A	B	C	D	E	FA	FB	H	MM	GA	GB	NN	L	T	LL
ø 6	15	12	14	3	8	14.5	-	28	M3×0.5	16	7	M6×1.0	49	3	77
ø 10	15	12	14	4	8	8	5	28	M4×0.7	12.5	9.5	M8×1.0	45	-	73
ø 16	15	18	20	5	8	8	5	28	M5×0.8	12.5	9.5	M10×1.0	45	-	73

Axial Foot (ACPL)

ACPL — Bore size — Stroke — Port Location on Head Cover

ACPL 6

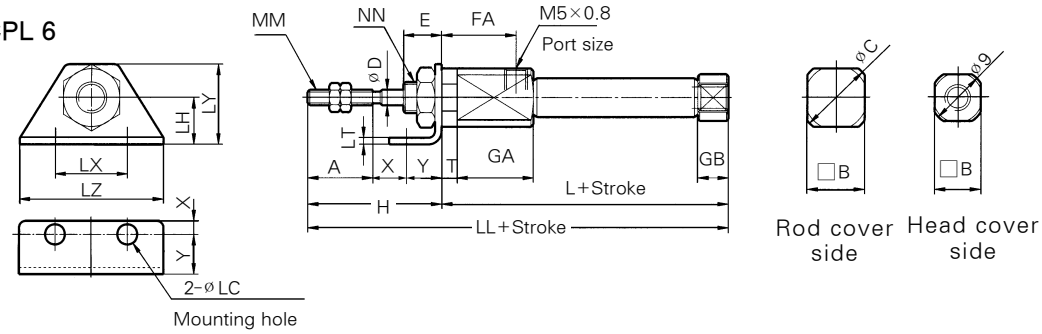

ACPL 10, 16

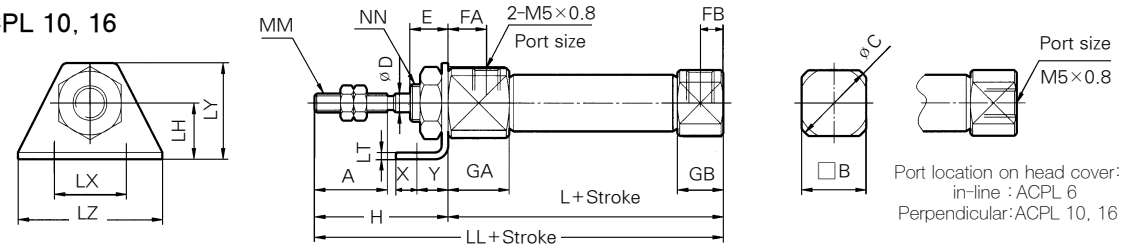

(mm)

Bore size	A	B	C	D	E	FA	FB	H	LC	LH	LT	LX	LY	LZ	MM	GA	GB	NN	L	T	X	Y	LL
ø 6	15	12	14	3	8	14.5	-	28	4.5	9	1.6	24	16.5	32	M3×0.5	16	7	M6×1.0	49	3	5	7	77
ø 10	15	12	14	4	8	8	5	28	4.5	9	1.6	24	16.5	32	M4×0.7	12.5	9.5	M8×1.0	45	-	5	7	73
ø 16	15	18	20	5	8	8	5	28	5.5	14	2.3	33	25	42	M5×0.8	12.5	9.5	M10×1.0	45	-	6	9	73

Rod Side Flange Type (ACPF)

ACPF Bore size — Stroke — Port Location on Head Cover

ACPF 6

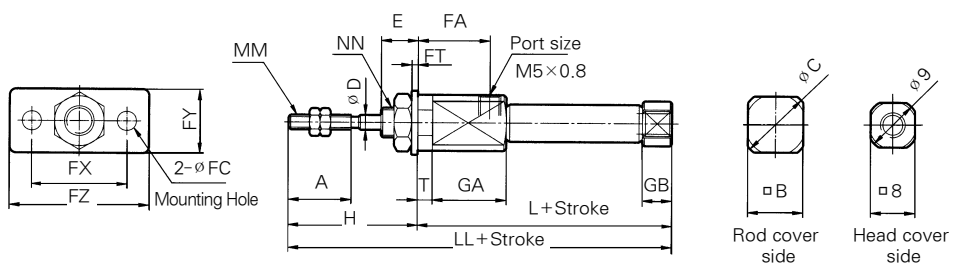

ACPF 10, 16

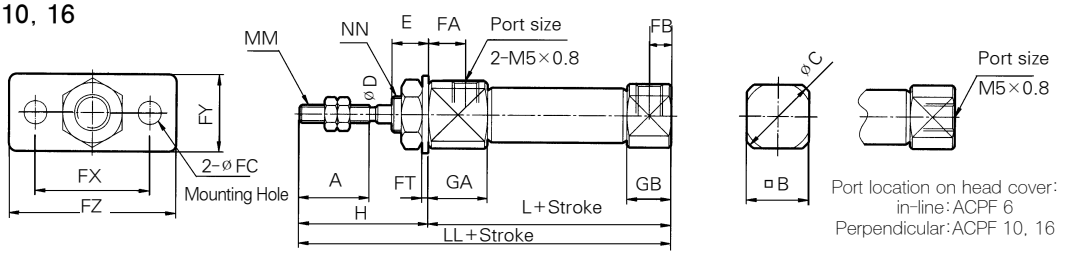

(mm)

Bore size	A	B	C	D	E	FC	FT	FX	FY	FZ	FA	FB	H	MM	GA	GB	NN	L	T	LL
ø 6	15	12	14	3	8	4.5	1.6	24	14	32	14.5	-	28	M3×0.5	16	7	M6×1.0	49	3	77
ø 10	15	12	14	4	8	4.5	1.6	24	14	32	8	5	28	M4×0.7	12.5	9.5	M8×1.0	45	—	73
ø 16	15	18	20	5	8	5.5	2.3	33	20	42	8	5	28	M5×0.8	12.5	9.5	M10×1.0	45	—	73

Double Clevis Type (ACPD)

ACPD Bore size — Stroke

ACPD 10, 16

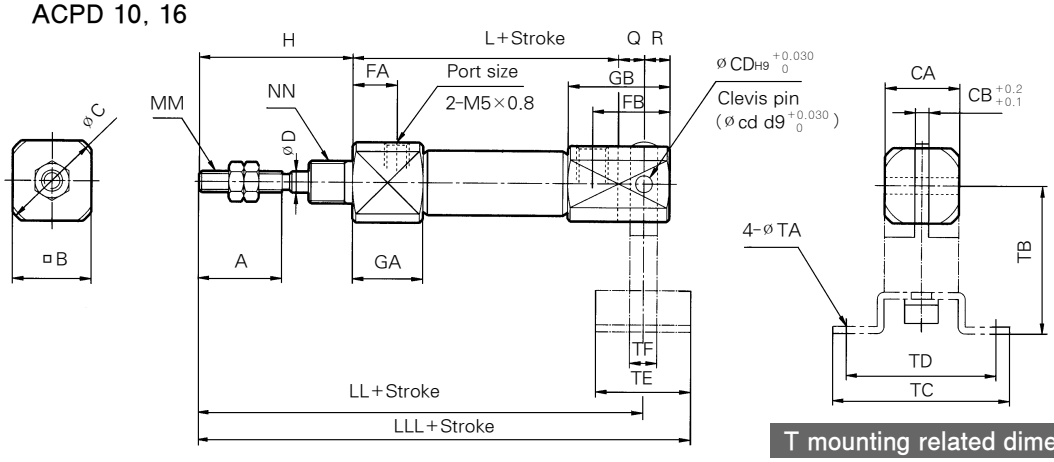

T mounting related dimensions (mm)

Bore size	TA	TB	TC	TE	TD	TF
10	4.5	29	40	22	32	12
16	5.5	35	48	28	38	16

(mm)

Bore size	A	B	C	CD(cd)	CB	CA	D	FA	FB	H	MM	GA	GB	NN	R	L	Q	LL	LLL
ø 10	15	12	14	3.3	3.2	12	4	8	18	28	M4×0.7	12.5	22.5	M8×1.0	5	45	8	81	92
ø 16	15	18	20	5	6.5	18	5	8	23	28	M5×0.8	12.5	27.5	M10×1.0	8	45	10	83	97

Accesories/Parts List

(mm)

Single Knuckle Joint

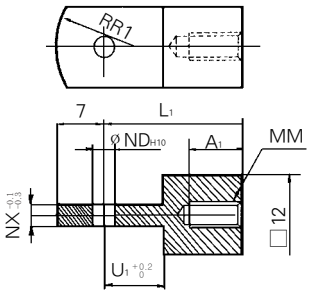

Material:Rolled steel

PART No	Bore	A_1	L_1	MM	ND^{H10}	NX	R_1	U_1
TC1P 010-17	ø 10	8	21	M4×0.7	$3.3^{+0.048}_{0}$	3.1	8	9
TC1P 016-17	ø 16	8	25	M5×0.8	$5^{+0.048}_{0}$	6.4	12	14

Knuckle Pin

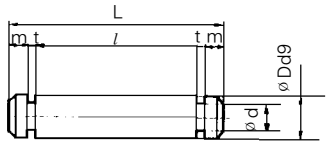

Material:Stainless steel

PART No	Bore	D^{d9}	d	L	l	m	t	Clib
TC1P 010-23B	ø 10	$3.3^{-0.030}_{-0.060}$	3	16.2	12.2	1.7	0.3	CType 3.2
TC1P 016-23B	ø 16	$5^{-0.030}_{-0.060}$	4.8	16.6	12.2	1.5	0.7	CType5

Double Knuckle Joint

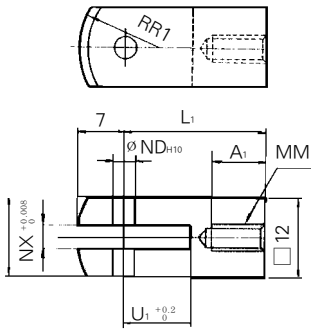

Material:Rolled steel

PART No	Bore	A_1	L_1	MM	ND^{H10}	NX	U_1	R_1
TC1P 010-18	ø 10	8	21	M4×0.7	$3.3^{+0.048}_{0}$	3.2	10	8
TC1P 016-18	ø 16	11	21	M5×0.8	$5^{+0.048}_{0}$	6.5	10	12

Mounting Nut

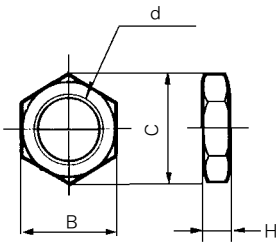

Material:Brass

PART No	Bore	B	C	d	H
TC1P 006-13A	ø 6	8	9.2	M6×1.0	4
TC1P 010-13A	ø 10	11	12.7	M8×1.0	4
TC1P 016-13A	ø 16	14	16.2	M10×1.0	4

Rod End Nut

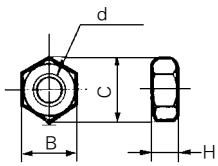

Material:Steel

Bore	B	C	d	H
ø 6	5.5	6.4	M3×0.5	2.4
ø 10	7	8.1	M4×0.7	3.2
ø 16	8	9.2	M5×0.8	4

Series ACPW

Standard Type/Double Acting : Double Rod

Bore Size : ø6, ø10, ø16

- STAINLESS STEEL BODY FOR HIGH CYCLE LIFE & LOW BREAKAWAY
- EASY MOUNTING
- BUMPERS STANDARD
- BUILT-IN MAGNET
- LIGHT COMPACT DESIGN
- MANUFACTURING CERTIFIED TO ISO 9001/9002 STANDARDS

Symbol

Double Acting/Double Rod

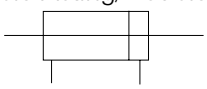

How to Order

ACPW B 16 – 60 – ○ – W5 ○

1 2 3 4 5 6 7

1 Air Cylinder
Built-in magnet, Rubber cushions are Standard

2 Mounting
B : Standard type
L : Axial foot type
F : Rod side flange type

3 Bore Size
6 : ø6
10 : ø10
16 : ø16

4 Stroke/(mm)
※ For Stroke Refer to Page A-10

5 Special Option
Blank : Standard
XC16 : Copper-free

6 Applicable Auto Switch
(Band mounted type)
Blank : without Switch
W5 : Reed Switch(Lead wire of 0.5m)
W5L : Reed Switch(Lead wire of 3m)

7 Number of switches
Blank : 2 pcs.
S : 1 pc.
N : (n) pcs.

PART No. of Mounting Bracket

Mounting Bracket	Bore size(mm)		
	ø6	ø10	ø16
Foot	TC1P006-19	TC1P010-19	TC1P016-19
Flange	TC1P006-20	TC1P010-20	TC1P016-20

PART No. of Auto Switch Mounting Band

Bore Size	PART No. of Auto Switch Mounting Band	Note
ø6	TC1P-006	Common use to all of W5□ types
ø10	TC1P-010	
ø16	TC1P-016	

Standard Type/Double Acting : Double Rod/Series ACPW

Specifications

Action		Double Acting Double Rod
Fluid		Air
Proof Pressure		10.5kgf/㎠ (1.05MPa)
Max. Operating Pressure		7.0kgf/㎠ (0.7MPa)
Min. Operating Pressure	ø6	1.2kgf/㎠ (0.12MPa)
	ø10, ø16	0.6kgf/㎠ (0.06MPa)
Ambient and fluid temperature		40~140°F (5 ~ 60℃)
Cushion		Rubber cushion (Standard)
Lubrication		None (Non-Lube)
Piston Speed		50~750 mm/sec

Auto Switch Specifications

Mounting	Bore Size	Reed switch
		Grommet
Band mounted type	ø6, ø10, ø16	W5 type

Mounting and Accessories

Mounting		Basic type	Foot type	Flange type
Standard	Mounting nut	●	●	●
	Rod end Nut	●	●	●
Option	Single knuckle joint	●	●	●
	Double knuckle joint(with pin)	●	●	●

Standard stroke

Bore size(mm)	Standard stroke(mm)
ø6	10, 15, 20, 25, 30, 35, 40, 45, 50, 60
ø10	10, 15, 20, 25, 30, 35, 40, 45, 50, 60, 75, 100
ø16	

Weight table

(gf)

Bore Size (mm)		ø6	ø10	ø16
※Basic Weight		27	35	70
Additional weight for each 15 of stroke		3	6	9
Mounting Bracket Weight	Foot type	14	14	38
	Flange type	5	5	13

※ Including the weights of mounting nut and rod end nut in the reference weight.
※ Double clevis type is not included with mounting nut.

Construction/Parts List

ACPWB 6

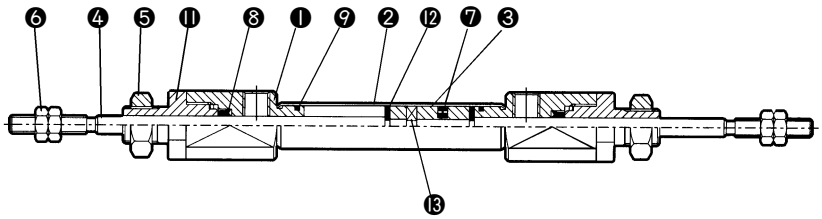

ACPWB 10, 16

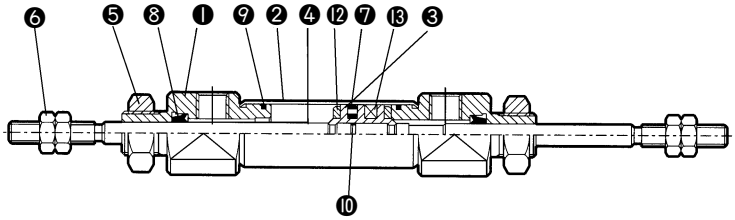

Parts List

No.	Description	Material	Note
❶	Rod Cover	Aluminum Alloy	White Alumite
❷	Cylinder Tube	Stainless Steel	
❸	Piston	Brass	
❹	Piston Rod	Stainless Steel	
❺	Mounting Nut	Brass	Nickel Plated
❻	Rod end Nut	Rolled Steel	Nickel Plated
❼	Piston Packing	NBR	

No.	Description	Material	Note
❽	Rod packing	NBR	
❾	Tube gasket	NBR	
❿	Piston gasket	NBR	
⓫	Packing retainer	Aluminum alloy	
⓬	Bumper	Urethane	
⓭	Magnet	–	

Standard Type (ACPWB)

ACPWB (Bore size)–(Stroke)

ACPWB6
Rod Cover

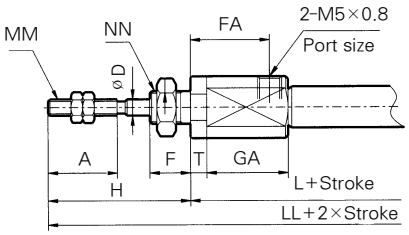

ACPWB10,16

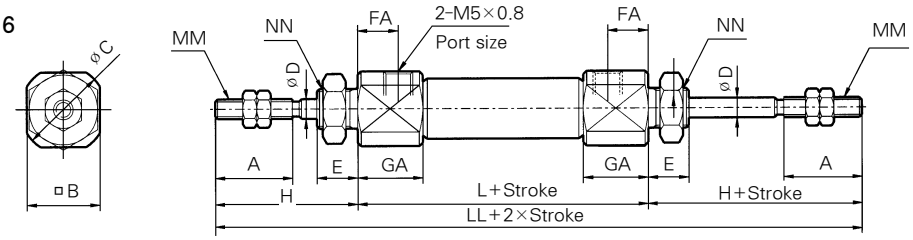

(mm)

Bore size	A	B	C	D	E	FA	H	MM	GA	NN	L	T	LL
ø6	15	12	14	3	8	14.5	28	M3×0.5	16	M6×1.0	68.5	3	124.5
ø10	15	12	14	4	8	8	28	M4×0.7	12.5	M8×1.0	48	–	104
ø16	15	8	20	5	8	8	28	M5×0.8	12.5	M10×1.0	48	–	104

FooT type (ACPWL)

ACPWL (Bore size)-(Stroke)

ACPWL6
Rod Cover

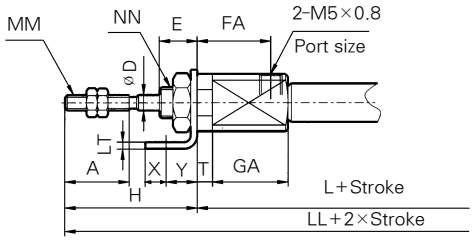

ACPWL10,16

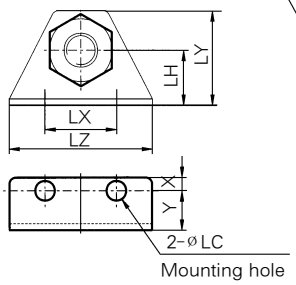

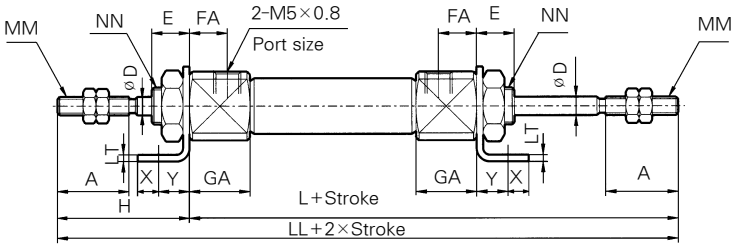

(mm)

Bore size	A	D	E	FA	H	LC	LH	LT	LX	LY	LZ	MM	GA	NN	L	T	X	Y	LL
ø6	15	3	8	14.5	28	4.5	9	1.6	24	16.5	32	M3×0.5	16	M6×1.0	68.5	3	5	7	124.5
ø10	15	4	8	8	28	4.5	9	1.6	24	16.5	32	M4×0.7	12.5	M8×1.0	48	–	5	7	104
ø16	15	5	8	8	28	5.5	14	2.3	33	25	42	M5×0.8	12.5	M10×1.0	48	–	6	9	104

Flange Type (ACPWF)

ACPWF (Bore size)-(Stroke)

ACPWF 6
Rod Cover

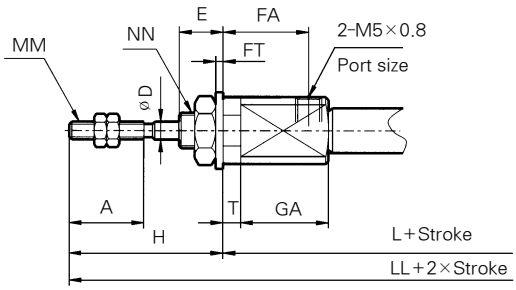

ACPWF10,16

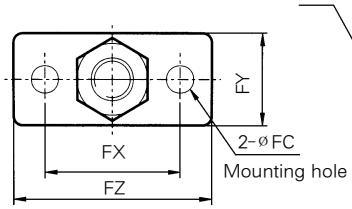

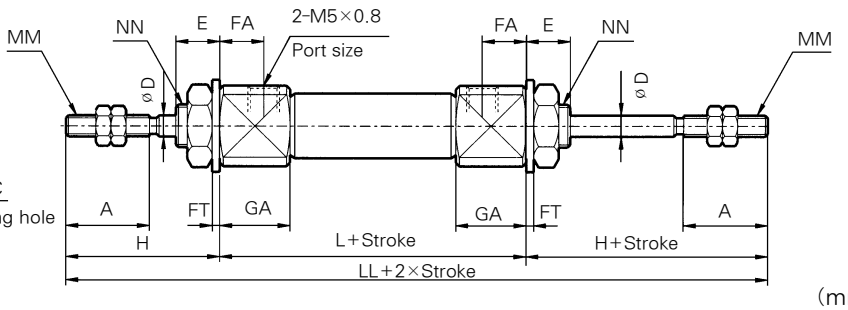

(mm)

Bore size	A	D	E	FC	FT	FX	FY	FZ	FA	H	MM	GA	NN	L	T	LL
ø6	15	3	8	4.5	1.6	24	14	32	14.5	28	M3×0.5	16	M6×1.0	68.5	3	124.5
ø10	15	4	8	4.5	1.6	24	14	32	8	28	M4×0.7	12.5	M8×1.0	48	–	104
ø16	15	5	8	5.5	2.3	33	20	42	8	28	M5×0.8	12.5	M10×1.0	48	–	104

Series ACPS

Standard Type/Single Acting Spring Return, Spring Extended

Bore Size : ø6, ø10, ø16

- STAINLESS STEEL BODY
- HIGH CYCLE LIFE
- BUILT - IN MAGNET
- COMPACT LIGHT DESIGN
- MANUFACTURING CERTIFIED TO ISO 9001&9002

Symbol

Single Acting/Single Rod

• Spring Return

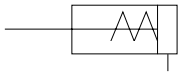

• Spring Extended

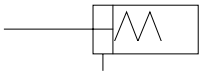

How to Order

ACPS B 16 – 30 S R – ○ – W5 ○

1 2 3 4 5 6 7 8 9

1 Air Cylinder
Built-in magnet, Rubber cushions are Standard

2 Mounting
B : Standard type
L : Axial foot type
F : Rod side flange type
D : Double cievis type (Except for ø6)

3 Bore Size(mm)
6 : ø6
10 : ø10
16 : ø16

4 Stroke (mm)
※ For Stroke Refer to Page A-14

5 Action
S : Single acting spring return
T : Single acting spring extended

6 Port Location on Head Cover

Symbol \ Bore size	ø6	ø10, ø16
R	-	in-line
Blank	in-line	Rear port

※"R" TYPE ø6 Standard

7 Special Options
Blank : Standard
XC16 : Copper-free

8 Applicable Auto Switch
(Band mounted type)
Blank : without Switch
W5 : Reed Switch(Lead wire of 0.5m)
W5L : Reed Switch(Lead wire of 3m)

9 Number of Switches
Blank : 2 pcs.
S : 1 pc
N : (n) pcs.

PART No. of Mounting Bracket

Mounting bracket	Bore size		
	ø6	ø10	ø16
Foot	TC1P006-19	TC1P010-19	TC1P016-19
Flange	TC1P006-20	TC1P010-20	TC1P016-20

PART No. of Auto Switch Mounting Band

Bore size	PART No. of auto switch mounting band	Note
ø6	TC1P-006	Common use to all of W5 types
ø10	TC1P-010	
ø16	TC1P-016	

Standard Type/Single Acting : Single Rod/Series ACPS

Specifications

Action		Spring Return	Spring Extended
Fluid		Air	
Proof Pressure		10.5kgf/㎠ (1.05MPa)	
Max. Operating pressure		7.0kgf/㎠ (0.7MPa)	
Min. Operating pressure	ø6	2.0kgf/㎠ (0.2MPa)	2.5kgf/㎠ (0.25MPa)
	ø10, ø16	1.5kgf/㎠ (0.15MPa)	
Ambient and fluid temperature		40~140°F (5~60℃)	
Cushion		Rubber cushion (Standard)	
Lubrication		None (Non-Lube)	
Piston speed		50~750 mm/sec, (2~29.5 in/sec)	

Auto Switch Specifications

Mounting	Bore Size	Reed switch
		Grommet
Band mounted type	ø6, ø10, ø16	W5 type

Standard stroke (mm)

Bore Size	Standard stroke
ø6	15, 30, 45, 60
ø10	15, 30, 45, 60
ø16	15, 30, 45, 60

Spring Retracting Force (kgf)

Bore Size	Extended position	Retracted position
ø6	0.38	0.18
ø10	0.70	0.36
ø16	1.45	0.70

Mounting and Accessories

Mounting		Basic type	Axial foot type	Rod side flange type	Double clevis type
Standard	Mounting nut	●	●	●	-
	Rod end nut	●	●	●	●
	Clevis pin	-	-	-	●
Option	Single knuckle joint	●	●	●	●
	Double knuckle joint(with pin)	●	●	●	●
	T Mounting	-	-	-	●

Construction/Parts List

Single Acting/Spring Extended
ACPS□□ - □T

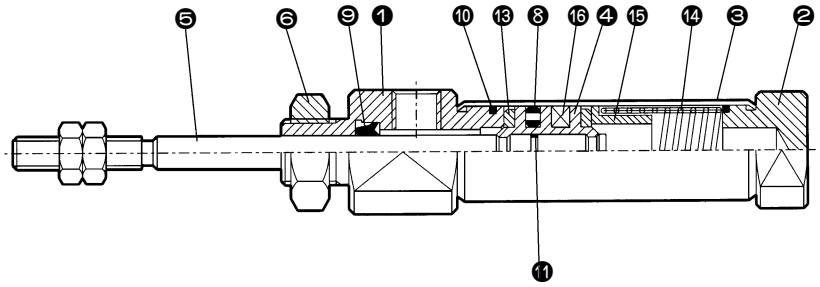

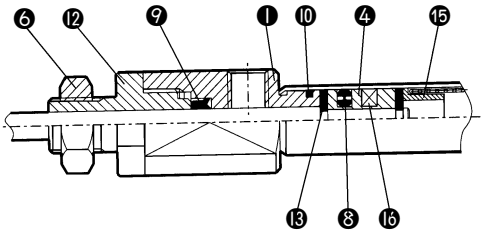

ACPS6 Rod Cover, Piston

Single Acting/Spring Return
ACPS□□ - □S

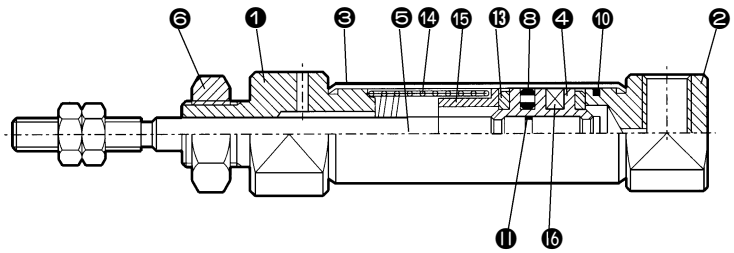

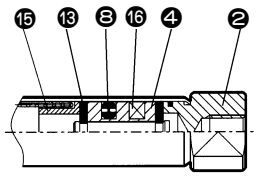

ACPS6 Head cover, Piston

Parts List

No.	Description	Material	Note
❶	Rod Cover	Aluminum Alloy	White Alumite
❷	Head Cover	Aluminum Alloy	White Alumite
❸	Cylinder Tube	Stainless Steel	-
❹	Piston	Brass	-
❺	Piston Rod	Stainless Steel	-
❻	Mounting Nut	Brass	Nickel Plated
❽	Piston Packing	NBR	-

Standard Type/Single Acting : Single Rod/Series UACPSB

No.	Description	Material	Note
❾	Rod packing	NBR	-
❿	Tube gasket	NBR	-
⓫	Piston gasket	NBR	-
⓬	Packing retainer	Aluminum Alloy	White Alumite
⓭	Bumper	Urethane	-
⓮	Return spring	Piano Wire	-
⓯	Spring seat	Brass	-
⓰	Magnet	-	-

Spring Return/Standard Type(ACPSB)

ACPSB Bore Size — Stroke (S) Port Location on Head Cover

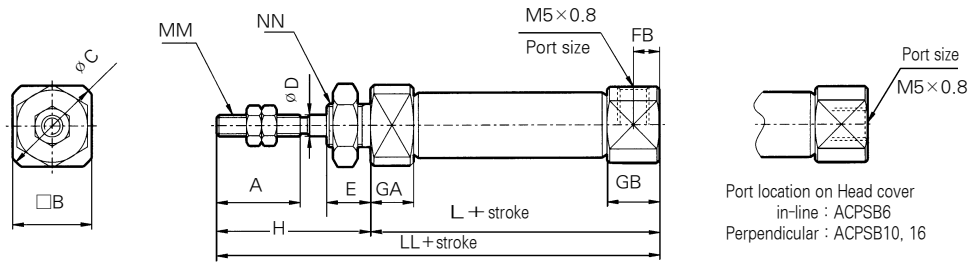

(mm)

Bore size	A	B	C	D	E	FB	H	MM	GA	GB	NN	L				LL			
												5~15ST	16~30ST	31~45ST	46~60ST	5~15ST	16~30ST	31~45ST	46~60ST
ø6	15	8	9	3	8	-	28	M3×0.5	3	7	M6×1.0	39.5	48.5	52.5	66.5	67.5	76.5	80.5	94.5
ø10	15	12	14	4	8	5	28	M4×0.7	5.5	9.5	M8×1.0	46.5	54	66	78	74.5	82	94	106
ø16	15	18	20	5	8	5	28	M5×0.8	5.5	9.5	M10×1.0	46	54.5	66.5	78.5	74	82.5	94.5	106.5

Spring Return/Axial Foot Type(ACPSL)

ACPSL Bore Size — Stroke (S) Port Location on Head Cover

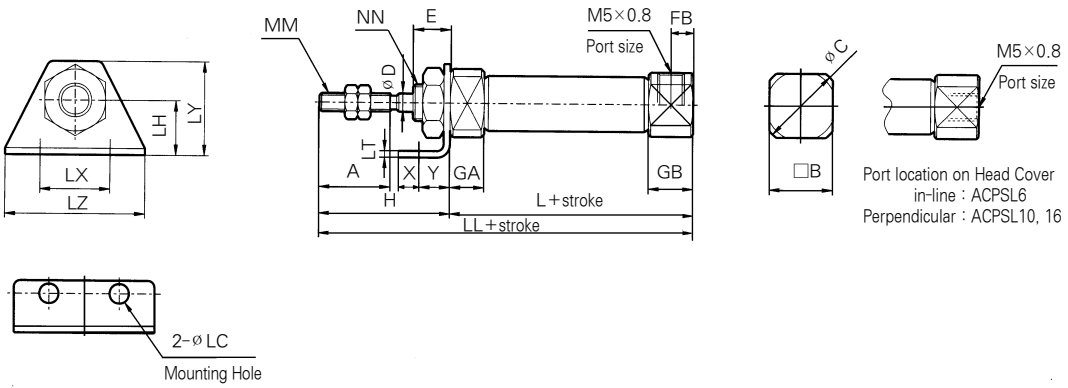

(mm)

Bore size	A	B	C	D	E	FB	H	LC	LH	LT	LX	LY	LZ	MM	GA	GB	NN	X	Y	L				LL			
																				5~15ST	16~30ST	31~45ST	46~60ST	5~15ST	16~30ST	31~45ST	46~60ST
ø6	15	8	9	3	8	-	28	4.5	9	1.6	24	16.5	32	M3×0.5	3	7	M6×1.0	5	7	39.5	48.5	52.5	66.5	67.5	76.5	80.5	94.5
ø10	15	12	14	4	8	5	28	4.5	9	1.6	24	16.5	32	M4×0.7	5.5	9.5	M8×1.0	5	7	46.5	54	66	78	74.5	82	94	106
ø16	15	18	20	5	8	5	28	5.5	14	2.3	33	25	42	M5×0.8	5.5	9.5	M10×1.0	6	9	46	54.5	66.5	78.5	74	82.5	94.5	106.5

Spring Return/Rod side Flange Type(ACPSF)

ACPSF Bore Size — Stroke S Port location on head cover

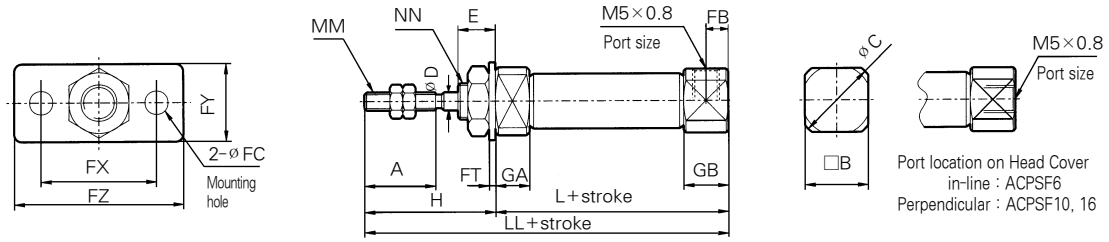

(mm)

Bore size	A	B	C	D	E	FC	FT	FX	FY	FZ	FB	H	MM	GA	GB	NN	L				LL			
																	5~15ST	16~30ST	31~45ST	46~60ST	5~15ST	16~30ST	31~45ST	46~60ST
ø6	15	8	9	3	8	4.5	1.6	24	14	32	-	28	M3×0.5	3	7	M6×1.0	39.5	48.5	52.5	66.5	67.5	76.5	80.5	94.5
ø10	15	12	14	4	8	4.5	1.6	24	14	32	5	28	M4×0.7	5.5	9.5	M8×1.0	46.5	54	66	78	74.5	82	94	106
ø16	15	18	20	5	8	5.5	2.3	33	20	42	5	28	M5×0.8	5.5	9.5	M10×1.0	46	54.5	66.5	78.5	74	82.5	94.5	106.5

Spring Return/Double Clevis Type(ACPSD)

ACPSD Bore Size — Stroke S Port location on head cover

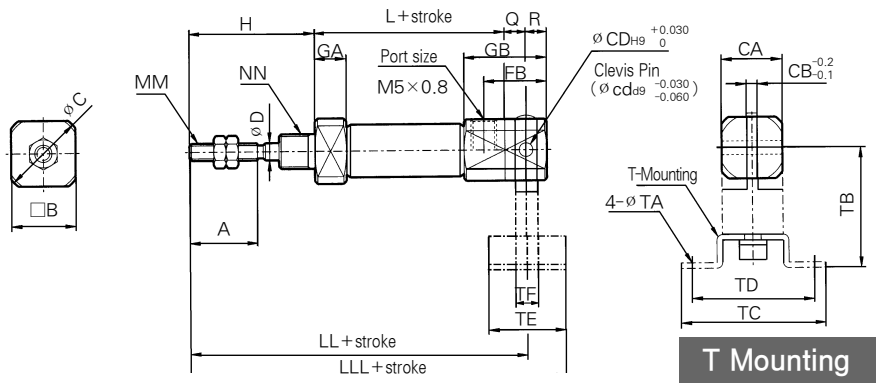

T Mounting (mm)

Bore size	TA	TB	TC	TD	TE	TF
ø10	4.5	29	40	32	22	12
ø16	5.5	35	48	38	28	16

(mm)

Bore size	A	B	C	CA	CB	CD (cd)	D	FB	GA	GB	H	MM	Q	R	L				LL				LLL			
															5~15ST	16~30ST	31~45ST	46~60ST	5~15ST	16~30ST	31~45ST	46~60ST	5~15ST	16~30ST	31~45ST	46~60ST
ø10	15	12	14	12	3.2	3.3	4	18	5.5	22.5	28	M4×0.7	8	5	46.5	54	66	78	82.5	90	102	114	93.5	101	113	125
ø16	15	18	20	18	6.5	5	5	23	5.5	27.5	28	M5×0.8	10	8	46	54.5	66.5	78.5	84	92.5	104.5	116.5	98	106.5	118.5	130.5

Spring Extended/Standard Type (ACPSB)

ACPSB Bore size — Stroke T

ACPSB6 - □T

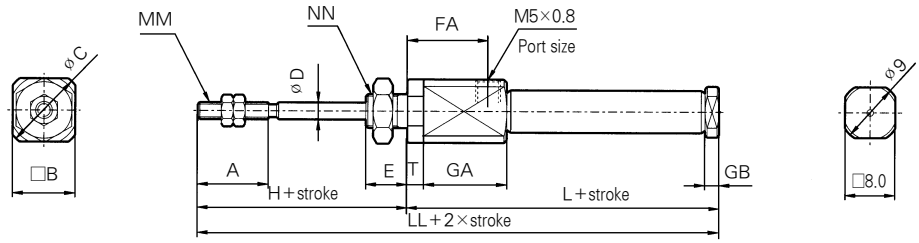

ACPSB 10 - □T
16

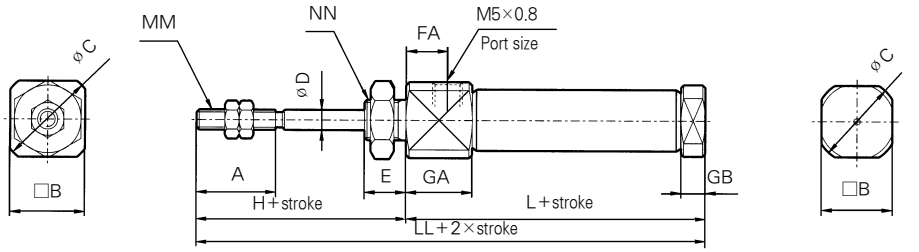

(mm)

Bore size	A	B	C	D	E	FA	H	MM	GA	GB	NDh8	T	NN	L				LL			
														5~15ST	16~30ST	31~45ST	46~60ST	5~15ST	16~30ST	31~45ST	46~60ST
ø6	15	12	14	3	8	14.5	28	M3×0.5	16	3	6 $^{0}_{-0.018}$	3	M6×1.0	51.5	60.5	64.5	78.5	79.5	88.5	92.5	106.5
ø10	15	12	14	4	8	5	28	M4×0.7	12.5	5.5	8 $^{0}_{-0.022}$	-	M8×1.0	49.5	57	69	81	77.5	85	97	109
ø16	15	18	20	5	8	5	28	M5×0.8	12.5	5.5	10 $^{0}_{-0.022}$	-	M10×1.0	49	57.5	69.5	81.5	77	85.5	97.5	109.5

Spring Extended/Axial Foot Type (ACPSL)

ACPSL Bore size — Stroke T

ACPSL6 - □T

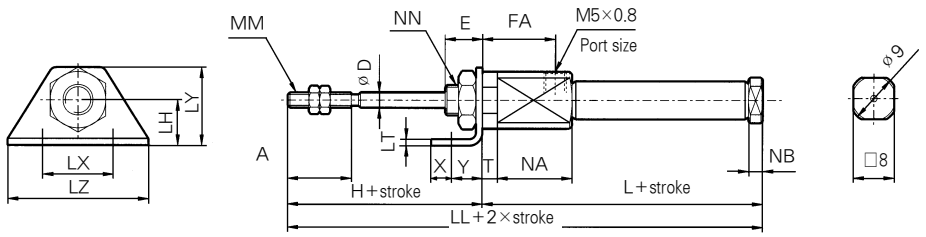

ACPSB 10 - □T
16

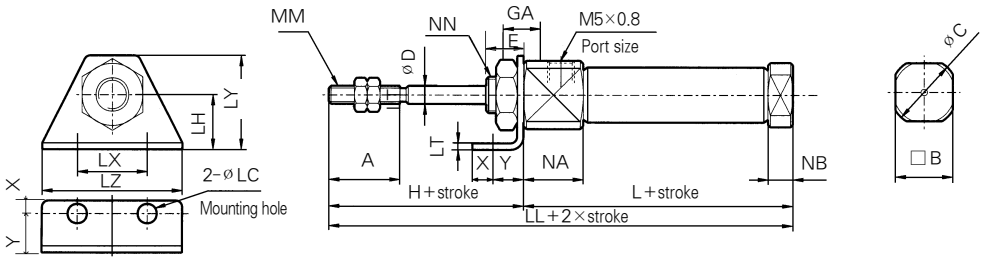

(mm)

Bore size	A	B	C	D	E	GA	H	LC	LH	LT	LX	LY	LZ	MM	NA	NB	T	X	Y	NN	L				LL			
																					5~15ST	16~30ST	31~45ST	46~60ST	5~15ST	16~30ST	31~45ST	46~60ST
ø6	15	12	14	3	8	14.5	28	4.5	9	1.6	24	16.5	32	M3×0.5	16	3	3	5	7	M6×1.0	51.5	60.5	64.5	78.5	79.5	88.5	92.5	106.5
ø10	15	12	14	4	8	8	28	4.5	9	1.6	24	16.5	32	M4×0.7	12.5	5.5	-	5	7	M8×1.0	49.5	57	69	81	77.5	85	97	109
ø16	15	18	20	5	8	8	28	5.5	14	2.3	33	25	42	M5×0.8	12.5	5.5	-	6	9	M10×1.0	49	57.5	69.5	81.5	77	85.5	97.5	109.5

Spring Extended/Rod Side Flange Type (ACPSF)

ACPSF Bore Size — Stroke T

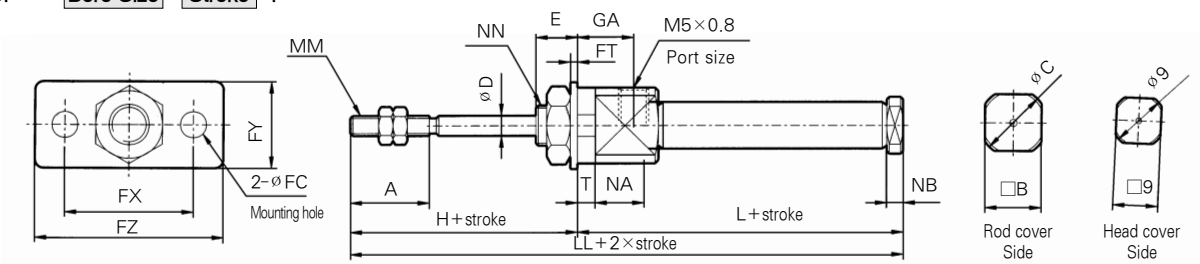

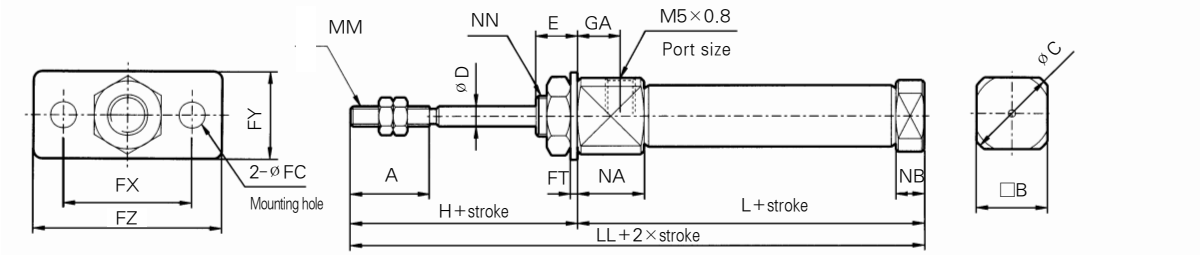

(mm)

Bore size	A	B	C	D	E	FC	FT	FX	FY	FZ	GA	H	MM	NA	NB	T	NN	L				LL			
																		5~15ST	16~30ST	31~45ST	46~60ST	5~15ST	16~30ST	31~45ST	46~60ST
ø6	15	12	14	3	8	4.5	1.6	24	14	32	14.5	28	M3×0.5	16	3	3	M6×1.0	51.5	60.5	64.5	78.5	79.5	88.5	92.5	106.5
ø10	15	12	14	4	8	4.5	1.6	24	14	32	8	28	M4×0.7	12.5	5.5	-	M8×1.0	49.5	57	69	81	77.5	85	97	109
ø16	15	18	20	5	8	5.5	2.3	33	20	42	8	28	M5×0.8	12.5	5.5	-	M10×1.0	49	57.5	69.5	81.5	77	85.5	97.5	109.5

Spring Extended/Double Clevis Type (ACPSD)

ACPSD Bore Size — Stroke T

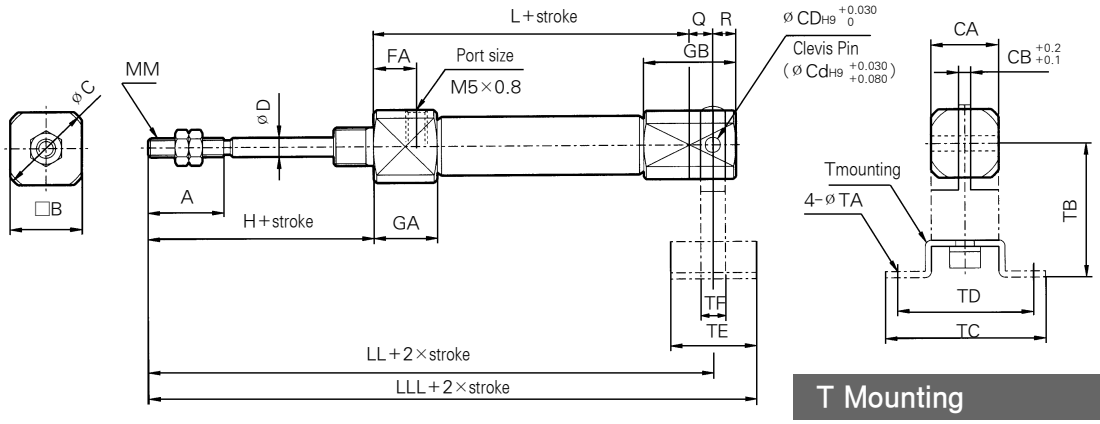

T Mounting

Bore size	TA	TB	TC	TD	TE	TF
ø10	4.5	29	40	32	22	12
ø16	5.5	35	48	38	28	16

(mm)

Bore size	A	B	C	CA	CB	CD (cd)	D	FB	GA	GB	H	MM	Q	R	L				LL				LLL			
															5~15ST	16~30ST	31~45ST	46~60ST	5~15ST	16~30ST	31~45ST	46~60ST	5~15ST	16~30ST	31~45ST	46~60ST
ø10	15	12	14	12	3.2	3.3	4	8	12.5	22.5	28	M4×0.7	8	5	53.5	61	73	85	89.5	97	109	121	100.5	108	120	132
ø16	15	18	20	18	6.5	5	5	8	12.5	27.5	28	M5×0.8	10	8	53	61.5	73.5	85.5	91	99.5	111.5	123.5	105	113.5	125.5	137.5

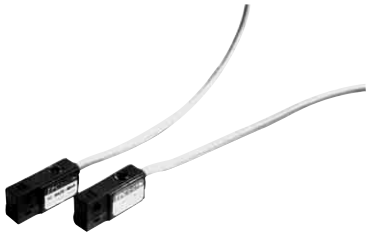

Specifications W5 Type(With indicator lamp)

Auto Switch Model	W5	
Application	Relay, Sequence Control	
Load Voltage	DC24V	AC110V
Max. Load Current/Range of Load Current	5~40mA	5~20mA
Protection Circuit for Contact Breaker Point	None	
Internal Voltage Drop	2.4V or less	
Indicator Lamp	ON:Red light emitting diode	

- Leakage Current – None
- Response Time – 1.2ms
- Lead Wire – Oil proof vinyl, ø3.4 0.2㎟, 2 Wire(red, black), 0.5m(18in)
- Impact Resistance– 30G
- Insulation Resistance – 50MΩ or more under the test voltage 500VDC (Between case and cable)
- Withstand Voltage – 1500VAC 1min (between case and cable)
- Ambient Temperature – -10~60℃
- Protection Structure – IEC spec IP67, Water-proof(JISCO920), oil-proof.

※ If 3m lead wire is required, L is put at the end of numbers.
Example : W5L

Auto Switch/Internal Circuit

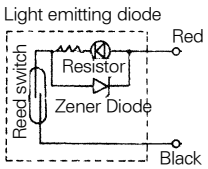

Auto Switch Dimensions (mm)

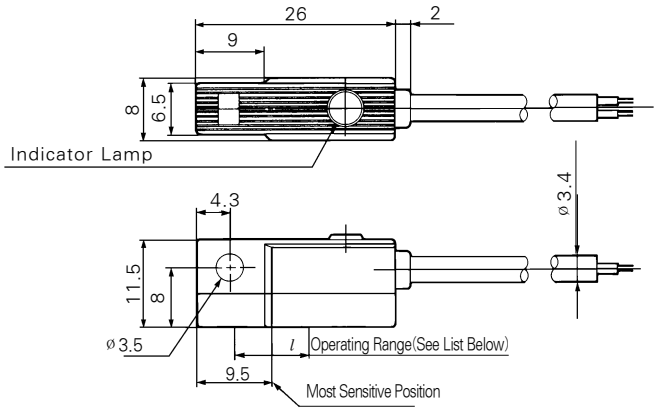

Operating Range(l Dimension) (mm)

Series	Bore size		
	ø6	ø10	ø16
ACP	6	7	7

Series AX

Standard Type/Double Acting : Single Rod

Bore Size(mm) : ø20, ø25, ø32, ø40

- STAINLESS STEEL BODY
- HIGH CYCLE LIFE
- LOW BREAKAWAY
- NUMEROUS MOUNTING OPTIONS
- MAGNET STANDARD FOR AUTO SWITCH
- BUMPERS STANDARD (AIR CUSHION OPTIONAL)
- DESIGNED FOR NON-LUBRICATED SERVICE
- COMPACT LIGHT DESIGN
- REPLACEABLE ROD GLAND
- MANUFACTURING CERTIFIED TO ISO 9001 / 9002

Symbol

Double acting/Single rod

How to Order

AX L 40 – 150 A J – ○ – W5 ○

1 2 3 4 5 6 7 8 9

1 Air Cylinder

2 Mounting
- B : Basic type
- L : Axial foot type
- F : Rod side flange type
- G : Head side flange type
- C : Single clevis type
- D : Double clevis type
- T : Head side trunnion type
- U : Rod side trunnion type
- E : Integrated clevis type
- BZ : Boss-cut basic type
- FZ : Boss-cut flange type
- UZ : Boss-cut trunnion type

3 Bore Size(mm)
- 20 : ø20
- 25 : ø25
- 32 : ø32
- 40 : ø40

4 Stroke(mm)
※ For Stroke Refer to page 22.

5 Cushion
- Blank : Rubber Cushion
- A : Air Cushion

6 Rod Boot Option
- Blank : Without Boot
- J : Nylon Tarpaulin
- K : Neoprene Cloth

Max. Ambient Temperature

J	60℃
K	※ 110℃

※ The Max. Ambient Temperature of Gaiters Only

7 Special Option
- Blank : Standard Type
- XC16 : Copper-Free

8 Applicable Auto Switch
(Band mounted type)
- Blank : without Switch
- W5 : Reed Switch(Lead wire of 0.5m)
- W5L : Reed Switch(Lead wire of 3m)

9 Number of Switches
- Blank : 2 pcs.
- S : 1 pc.
- N : (n) pcs.

PART No. of Mounting Bracket

Bore Size(mm)	ø20	ø25	ø32	ø40
※Axial foot	TCM-L020B	TCM-L032B		TCM-L040B
Flange	TCM-F020B	TCM-F032B		TCM-F040B
Single Clevis	TCM-C020B	TCM-C032B		TCM-C040B
Double Clevis	TCM-D020B	TCM-D032B		TCM-D040B
Trunnion(With nut)	TCM-T020B	TCM-T032B		TCM-T040B

※ 2 pcs. Required Per Cylinder

PART No. of Auto Switch Mounting Band

Auto Switch Model	Bore Size(mm)			
	ø20	ø25	ø32	ø40
W5	TBM2-020	TBM2-025	TBM2-032	TBM2-040

Model

Bore Size (mm)	Ø20	Ø25	Ø32	Ø40
Type	Air Cylinder			
Cushion	Rubber Cushion, Air Cushion			
Piping Method	1/8 Rc(PT)	1/8 Rc(PT)	1/8 Rc(PT)	1/4 Rc(PT)

Specifications

Action	Double Acting Single Rod
Fluid	Air
Proof Pressure	15kgf/cm² {1.5MkPa}
Max. Operating Pressure	9.9kgf/cm² {1.0MPa}
Min. Operating Pressure	0.5kgf/cm² {0.05MPa}
Ambient and Fluid Temperature	5~60 °C
Lubrication	None (Non-Lube)
Thread Tolerance	KS 2 Class
Stroke Tolerance	$^{+1.4}_{0}$ mm

Piston Speed (Rubber Cushion)

Bore Size (mm)	Ø20	Ø25	Ø32	Ø40
Piston Speed	50~750 mm/sec			
Allowable Kinetic Energy(kgf-cm)	2.7	4	6.5	12

Auto Switch Specifications

Mounting	Lead Wire Entry	Reed Switch
Band Mounting Type	Grommet	W5

Bore Size-Standard Stroke

(Unit : mm)

Bore Size	※ Standard Stroke	※ Long Stroke	Production Max. Stroke
Ø20	25, 50, 75, 100, 125, 150, 200, 250, 300	400	500
Ø25		450	
Ø32		450	
Ø40		500	

※ A long stroke applies to the foot type and the rod side flange type.

Boss-Cut Type

Boss for the head cover bracket is eliminated and the total length of the cylinder is shortened.

Compared to The Total Length of Cylinder

(Compared to The Basic Type)

ø20	ø25	ø32	ø40
▲13	▲13	▲13	▲16

Mounting

- ●Boss-Cut Basic Type(BZ) ●Boss-Cut Flange Type(FZ)
- ●Boss-Cut Trunnion Type(UZ)

Mounting and Accessovies

Mounting \ Accessories	Standard			Option		
	Mounting Nut	Rod End Nut	Clevis Pin	Single Kn-Uckle Joint	Double Kn-Uckle Joint	Boot
Basic Type	●(1pc.)	●	–	●	●	●
Axial Foot Type	●(2)	●	–	●	●	●
Rod Side Flange Type	●(1)	●	–	●	●	●
Head Side Flange Type	●(1)	●	–	●	●	●
Integrated Clevis Type	–	●	–	●	●	●
Single Clevis Type	–	●	–	●	●	●
Double Clevis Type	–	●	●	●	●	●
Head Side Trunnion Type	●(1)	●	–	●	●	●
Rod Side Trunnion Type	●(1)	●	–	●	●	●
Boss-Cut Basic Type	●(1)	●	–	●	●	●
Boss-Cut Flange Type	●(1)	●	–	●	●	●
Boss-Cut Trunnion Type	●(1)	●	–	●	●	●
Note					With pin	

Weight Table

(kgf)

Bore Size(mm)		ø20	ø25	ø32	ø40
Basic Weight	Basic Type	0.14	0.21	0.28	0.56
	Axial Foot Type	0.29	0.37	0.44	0.83
	Flange Type	0.20	0.30	0.37	0.68
	Integrated Clevis Type	0.12	0.19	0.27	0.52
	Single Clevis Type	0.18	0.25	0.32	0.65
	Double Clevis Type	0.19	0.27	0.33	0.69
	Trunnion Type	0.18	0.28	0.34	0.66
	Boss-Cut basic Type	0.13	0.19	0.26	0.53
	Boss-Cut flange Type	0.19	0.28	0.35	0.65
	Boss-Cut trunnion Type	0.17	0.26	0.32	0.63
Additional weight for each 50 of stroke		0.04	0.06	0.08	0.13
Mounting bracket	Single Knuckle Joint	0.06	0.06	0.06	0.23
	Single Knuckle Joint	0.07	0.07	0.07	0.20

Calculation Example: AXL32-100

- Basic weight : 0.44 (Foot type, ø32)
- Additional weight : 0.08/50 stroke
- Cylinder stroke: 100 stroke
  0.44+0.08×100/50=0.06kgf

Boss - Cut Type

AX ◯ Z Bore Size — Stroke Boot

Specifications

Action	Double Acting Single Rod
Bore Size (mm)	ø20, ø25, ø32, ø40
Max. Operating Pressure	9.9kgf/cm² (1.0MPa)
Min. Operating Pressure	1.8kgf/cm² (0.18MPa)
Piston Speed	0.5~300 mm/sec
Cushion	Rubber cushion (standard)
Piping Method	Screwed type
Mounting	Basic Type, Rod Side Flange Type, Head Side Flange Type, Rod Side Trunnion Type.

※ Auto Switch Available.

With Air Cushion

AX Mounting Bore Size — Stroke A Boot

With Air Cushion

Specifications

Action	Double Acting Single Rod
Bore Size(mm)	ø20, ø25, ø32, ø40
Max. Operating Pressure	9.9kgf/cm² (1.0MPa)
Min. Operating Pressure	0.5kgf/cm² (0.05MPa)
Cushion	Air Cushion
Piping Method	Screwed Type
Piston Speed	50~1,000 mm/sec
Mounting	Basic Type, Axial Foot Type, Rod Side Flange Type, Head Side Flange Type, Single Clevis Type, Double Clevis Type, Head Side Trunnion Type, Rod Side Trunnion Type, Integrated Clevis Type, Boss-Cut Type.

※ Auto Switch Available.

Cushion Mechanism

Bore size (mm)	Effective Cushion Length(mm)	Cushion Effective Oriffice(cm²)	Allowable Kinetic Energy(kgf-cm)
ø20	11.0	2.09	5.5
ø25	11.0	3.30	8.0
ø32	11.0	5.86	13
ø40	11.8	9.08	24

Construction/Parts List

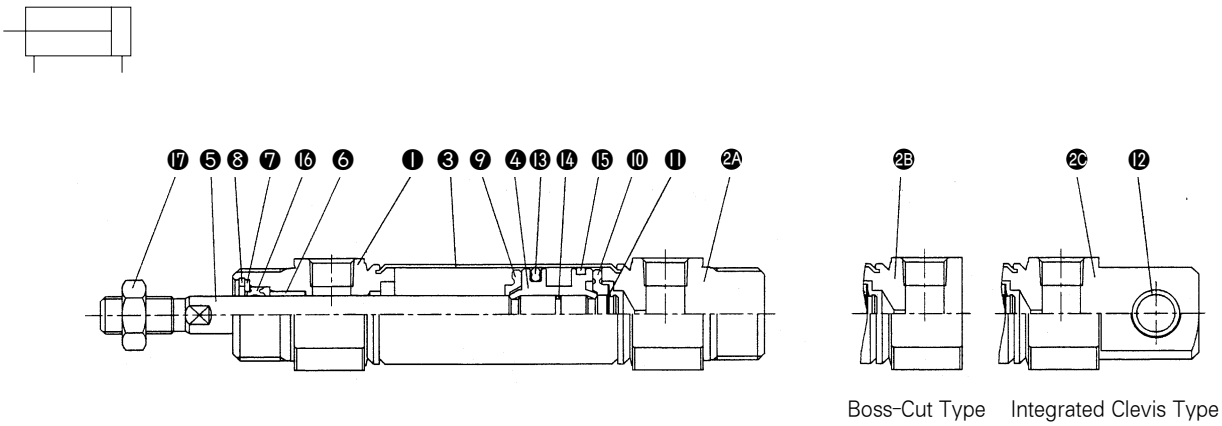

With Air Cushion

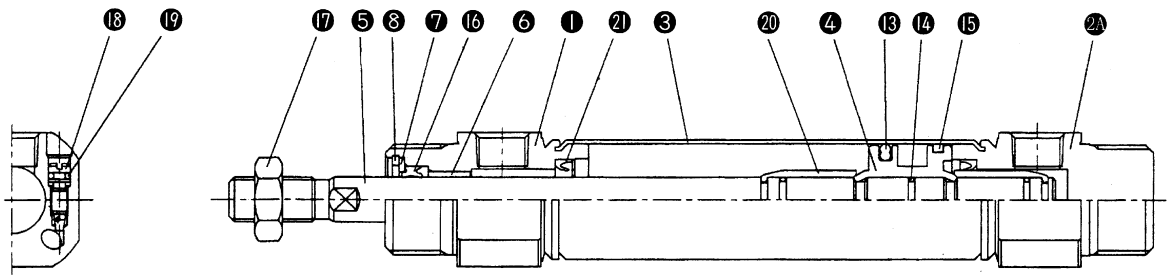

Parts list

No.	Descripion	Material	Note
❶	Rod Cover	Aluminum Alloy	White Alumite
2A	Head Cover A	Aluminum Alloy	White Alumite (Standard type)
2B	Head Cover B	Aluminum Alloy	White Alumite (Boss-cut type)
2C	Head Cover C	Aluminum Alloy	White Alumite (Integrated clevis type)
❸	Cylinder Tube	Stainless Steel	
❹	Piston	Aluminum Alloy	Chromate
❺	Piston Rod	Carbon Steel	Hard Chrome plated
❻	Bush	Lead Bronze Casting	
❼	Packing Retainer	Rolled Steel	Nickel plated
❽	Retaining Pin	Carbon Stee	Nickel plated
❾	Damper A	Urethane	
❿	Damper B	Urethane	
⓫	Stopper Ring	Carbon Steel	

No.	Descripion	Material	Note
⓬	Clevis Bush	Lead Bronze Casting	
⓭	Piston Packing	NBR	
⓮	Piston Gasket	NBR	
⓯	Wearing	Resin	
⓱	Rod Nut	Nickel Plated	
⓲	Cushion Value Gasket	NBR	
⓳	Cushion Ring		
⓴	Cushion Packing	NBR	

Spare parts/Packing List

• **With Rubber Cushion/With Air Cushion**

No.	Desc-ription	Mate-rial	Bore Size(mm)			
			ø 20	ø 25	ø 32	ø 40
⓰	Rod Packing	NBR	PDU-8Z	PDU-10Z	PDU-12LZ	PDU-14LZ

Basic Type (B)

AXB (Bore Size)—(Stroke)

Standard Type

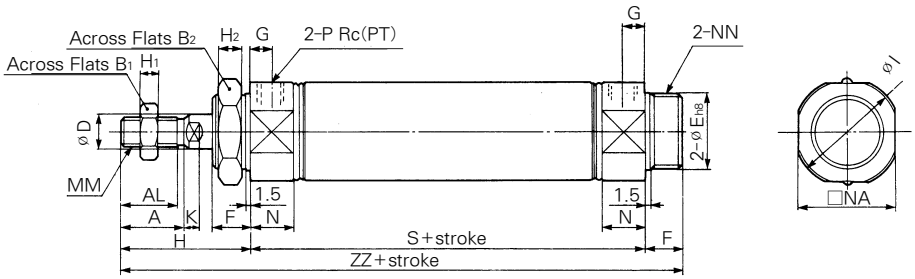

Rod Boot

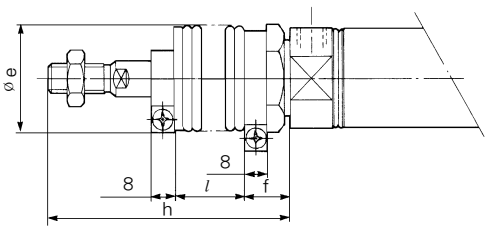

With Air Cushion

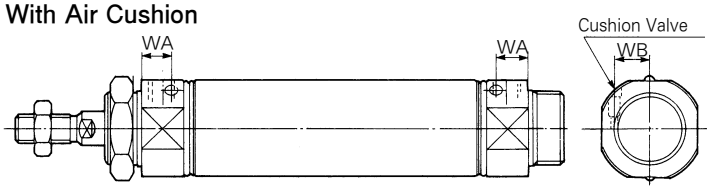

Boss-Cut Type

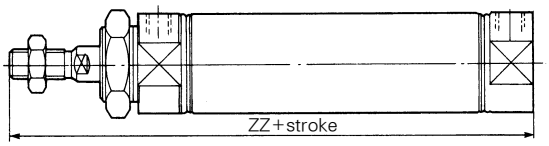

(Unit : mm)

Bore Size	Stroke Range	A	AL	B_1	B_2	D	E	F	G	H	H_1	H_2	I	K	MM	N	NA	NN	P	S	ZZ
ø20	~300	18	15.5	13	26	8	$20^{0}_{-0.033}$	13	8	41	5	8	27	5	M8×1.25	15	24	M20×1.5	1/8	62	116
ø25	~300	22	19.5	17	32	10	$26^{0}_{-0.033}$	13	8	45	6	8	33	5.5	M10×1.25	15	30	M26×1.5	1/8	62	120
ø32	~300	22	19.5	17	32	12	$26^{0}_{-0.033}$	13	8	45	6	8	37.5	5.5	M10×1.25	15	34.5	M26×1.5	1/8	64	122
ø40	~300	24	21	22	41	14	$32^{0}_{-0.039}$	16	11	50	8	10	46.5	7	M14×1.5	21.5	42.5	M32×2	1/4	88	154

With Boot

(Unit : mm)

Bore Size	e	f	h							l						
			1~50	51~100	101~150	151~200	201~300	301~400	401~500	1~50	51~100	101~150	151~200	201~300	301~400	401~500
ø20	30	16	68	81	93	106	131	156	–	12.5	25	37.5	50	75	100	–
ø25	30	16	72	85	97	110	135	160	185	12.5	25	37.5	50	75	100	125
ø32	30	16	72	85	97	110	135	160	185	12.5	25	37.5	50	75	100	125
ø40	40	18	77	90	102	115	140	165	190	12.5	25	37.5	50	75	100	125

Boss-Cut Type

Bore Size	ZZ
ø20	103
ø25	107
ø32	109
ø40	138

With Air Cushion

Bore Size	WA	WB
ø20	11.5	8.5
ø25	11.5	10
ø32	11.5	11.5
ø40	14.5	15

Axial Foot Type(L)

AXL (Bore Size) — (Stroke) ◯

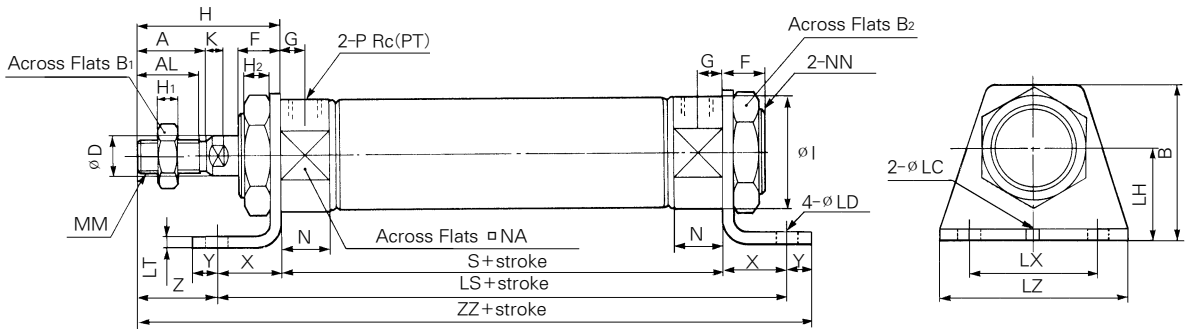

With Air Cushion

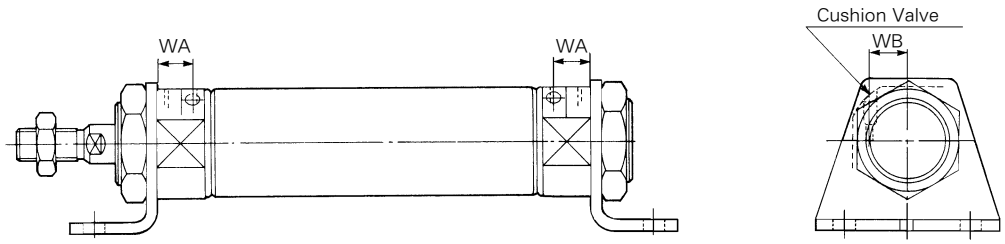

(Unit : mm)

Bore Size	Stroke Range	A	AL	B	B_1	B_2	D	F	G	H	H_1	H_2	I	K	LC	LD	LH	LS	LT	LX	LZ	MM	N	NA	NN	P	S	X	Y	Z	ZZ
ø20	~400	18	15.5	40	13	26	8	13	8	41	5	8	27	5	4	6.8	25	102	3.2	40	55	M8×1.25	15	24	M20×1.5	1/8	62	20	8	21	131
ø25	~450	22	19.5	47	17	32	10	13	8	45	6	8	33	5.5	4	6.8	28	102	3.2	40	55	M10×1.25	15	30	M26×1.5	1/8	62	20	8	25	135
ø32	~450	22	19.5	47	17	32	12	13	8	45	6	8	37.5	5.5	4	6.8	28	104	3.2	40	55	M10×1.25	15	34.5	M26×1.5	1/8	64	20	8	25	137
ø40	~500	24	21	54	22	41	14	16	11	50	8	10	46.5	7	4	7	30	134	3.2	55	75	M14×1.5	21.5	42.5	M32×2	1/4	88	23	10	27	171

With Air Cushion

Bore Size	WA	WB
ø20	11.5	8.5
ø25	11.5	10
ø32	11.5	11.5
ø40	14.5	15

Rod Side Flange Type (F)

AXF (Bore Size)—(Stroke) ◯

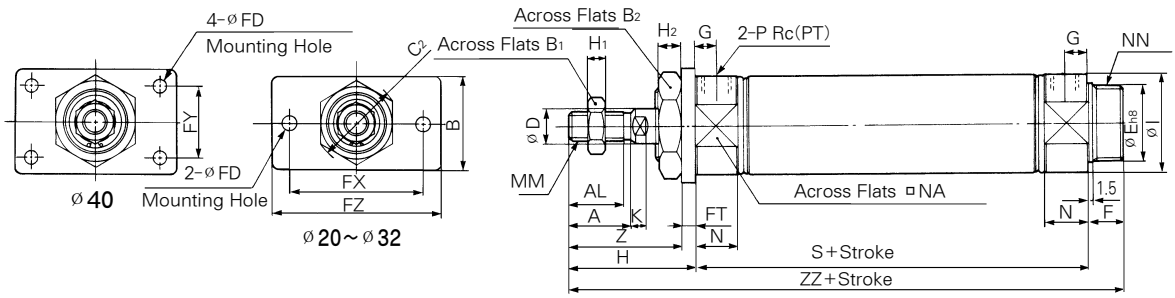

Boss-Cut Type

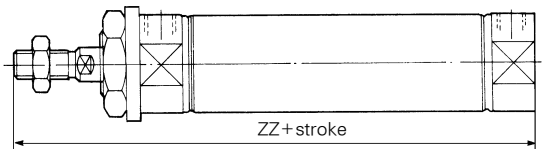

With Air Cushion

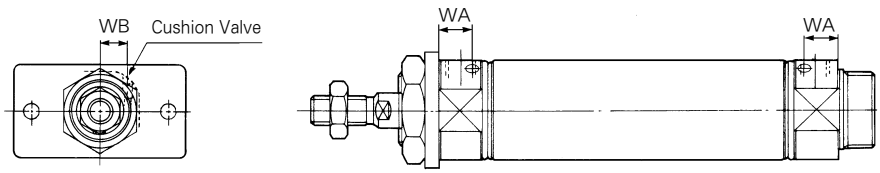

(Unit : mm)

Bore Size	Stroke Range	A	AL	B	B_1	B_2	C_2	D	E	F	FD	FT	FX	FY	FZ	G	H	H_1	H_2	I	K	MM
ø 20	～400	18	15.5	34	13	26	30	8	$20^{0}_{-0.033}$	13	7	4	60	—	75	8	41	5	8	27	5	M8×1.25
ø 25	～450	22	19.5	40	17	32	37	10	$26^{0}_{-0.033}$	13	7	4	60	—	75	8	45	6	8	33	5.5	M10×1.25
ø 32	～450	22	19.5	40	17	32	37	12	$26^{0}_{-0.033}$	13	7	4	60	—	75	8	45	6	8	37.5	5.5	M10×1.25
ø 40	～500	24	21	52	22	41	47.3	14	$32^{0}_{-0.039}$	16	7	5	66	36	82	11	50	8	10	46.5	7	M14×1.5

(Unit : mm)

Bore Size	N	NA	NN	P	S	Z	ZZ
ø 20	15	24	M20×1.5	1/8	62	37	116
ø 25	15	30	M26×1.5	1/8	62	41	120
ø 32	15	34.5	M26×1.5	1/8	64	41	122
ø 40	21.5	42.5	M32×2	1/4	88	45	154

Boss-Cut Type

Bore Size	ZZ
ø 20	103
ø 25	107
ø 32	109
ø 40	138

With Air Cushion

Bore Size	WA	WB
ø 20	11.5	8.5
ø 25	11.5	10
ø 32	11.5	11.5
ø 40	14	15

Head Side Flange Type (G)

AXG (Bore Size) — (Stroke) ◯

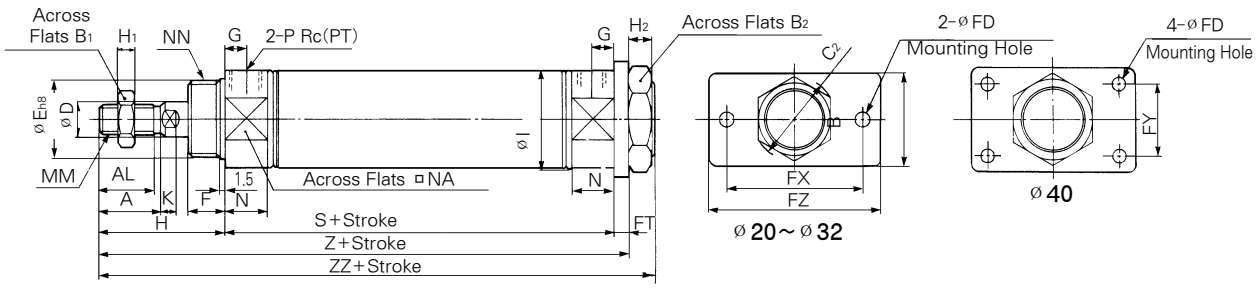

With Air Cushion

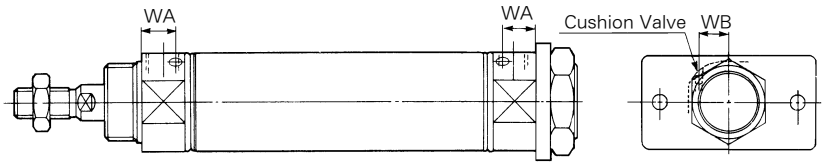

(Unit : mm)

Bore Size	Stroke Range	A	AL	B	B_1	B_2	C_2	D	E	F	FD	FT	FX	FY	FZ	G	H	H_1	H_2	I
ø 20	～300	18	15.5	34	13	26	30	8	20 $^{0}_{-0.033}$	13	7	4	60	—	75	8	41	5	8	27
ø 25	～300	22	19.5	40	17	32	37	10	26 $^{0}_{-0.033}$	13	7	4	60	—	75	8	45	6	8	33
ø 32	～300	22	19.5	40	17	32	37	12	26 $^{0}_{-0.033}$	13	7	4	60	—	75	8	45	6	8	37.5
ø 40	～300	24	21	52	22	41	47.3	14	32 $^{0}_{-0.039}$	16	7	5	66	36	82	11	50	8	10	46.5

(Unit : mm)

Bore Size	K	MM	N	NA	NN	P	S	Z	ZZ
ø 20	5	M8×1.25	15	24	M20×1.5	1/8	62	107	116
ø 25	5.5	M10×1.25	15	30	M26×1.5	1/8	62	111	120
ø 32	5.5	M10×1.25	15	34.5	M26×1.5	1/8	64	113	122
ø 40	7	M14×1.5	21.5	42.5	M32×2	1/4	88	143	154

With Air Cushion

Bore Size	WA	WB
ø 20	11.5	8.5
ø 25	11.5	10
ø 32	11.5	11.5
ø 40	14.5	15

Single Clevis Type (C)

AXC (Bore Size)—(Stroke) ◯

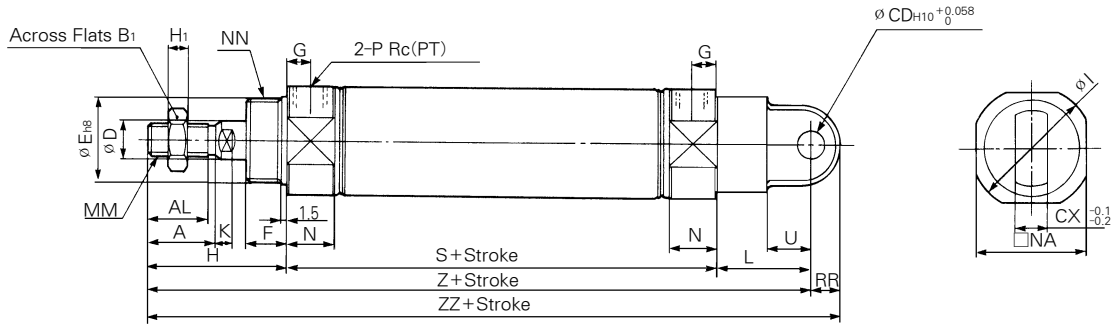

With Air Cushion

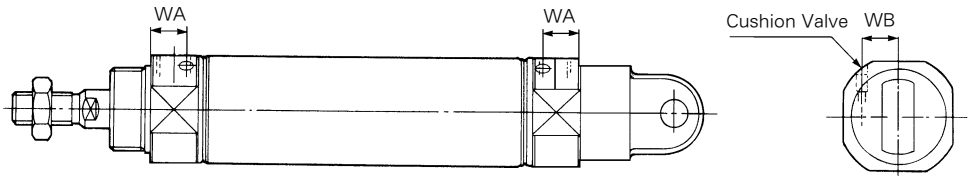

(Unit : mm)

Bore Size	Stroke Range	A	AL	B_1	CD	CX	D	E	F	G	H	H_1	I	K	L	MM
ø20	~300	18	15.5	13	9	10	8	$20^{0}_{-0.033}$	13	8	41	5	27	5	30	M8×1.25
ø25	~300	22	19.5	17	9	10	10	$26^{0}_{-0.033}$	13	8	45	6	33	5.5	30	M10×1.25
ø32	~300	22	19.5	17	9	10	12	$26^{0}_{-0.033}$	13	8	45	6	37.5	5.5	30	M10×1.25
ø40	~300	24	21	22	10	15	14	$32^{0}_{-0.039}$	16	11	50	8	46.5	7	39	M14×1.5

(Unit : mm)

Bore Size	N	NA	NN	P	RR	S	U	Z	ZZ
ø20	15	24	M20×1.5	1/8	9	62	14	133	142
ø25	15	30	M26×1.5	1/8	9	62	14	137	146
ø32	15	34.5	M26×1.5	1/8	9	64	14	139	148
ø40	21.5	42.5	M32×2	1/4	11	88	18	177	188

With Air Cushion

Bore Size	WA	WB
ø20	11.5	8.5
ø25	11.5	10
ø32	11.5	11.5
ø40	14.5	15

Double Clevis Type (D)

AXD (Bore Size) — (Stroke) ◯

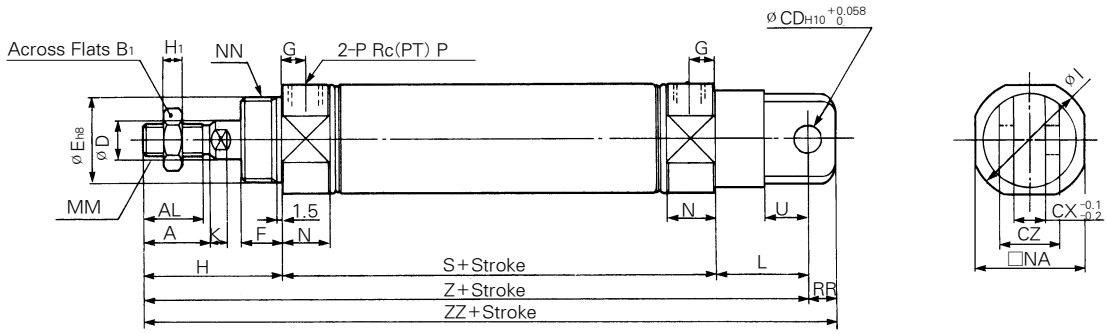

With Air Cushion

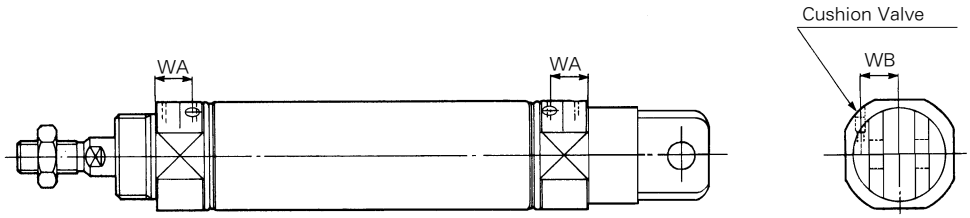

(Unit : mm)

Bore Size	Stroke Range	A	AL	B1	CD	CX	CZ	D	E	F	G	H	H1	I	K	L	MM	N	NA	NN	P	RR	S	U	Z	ZZ
Ø 20	~300	18	15.5	13	9	10	19	8	$20^{0}_{-0.033}$	13	8	41	5	27	5	30	M8×1.25	15	24	M20×1.5	1/8	9	62	14	133	142
Ø 25	~300	22	19.5	17	9	10	19	10	$26^{0}_{-0.033}$	13	8	45	6	33	5.5	30	M10×1.25	15	30	M26×1.5	1/8	9	62	14	137	146
Ø 32	~300	22	19.5	17	9	10	19	12	$26^{0}_{-0.033}$	13	8	45	6	37.5	5.5	30	M10×1.25	15	34.5	M26×1.5	1/8	9	64	14	139	148
Ø 40	~300	24	21	22	10	15	30	14	$32^{0}_{-0.039}$	16	11	50	8	46.5	7	39	M14×1.5	21.5	42.5	M32×2	1/4	11	88	18	177	188

With Air Cushion

Bore Size	WA	WB
Ø 20	11.5	8.5
Ø 25	11.5	10
Ø 32	11.5	11.5
Ø 40	14.5	15

Rod Side Trunnion Type (U)

AXU (Bore Size) — (Stroke) ◯

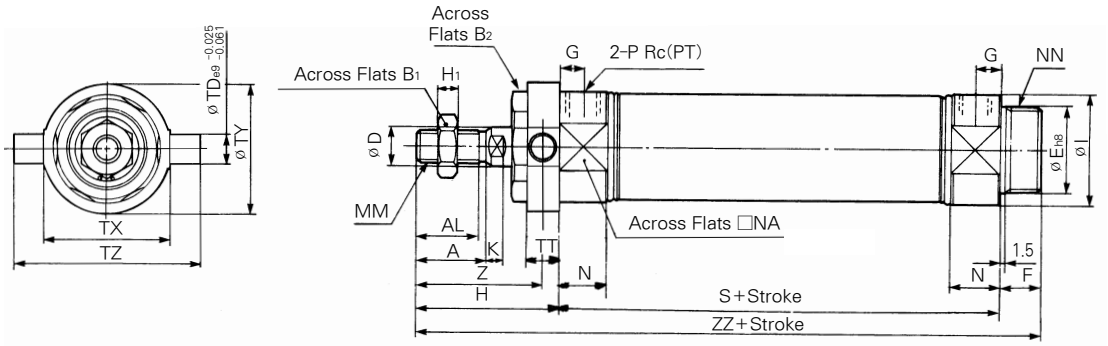

Boss-Cut Type

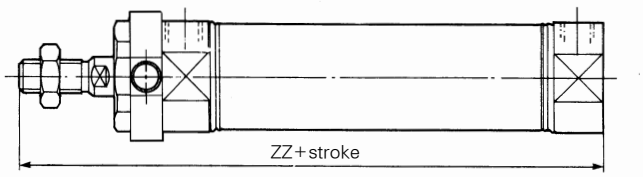

With Air Cushion

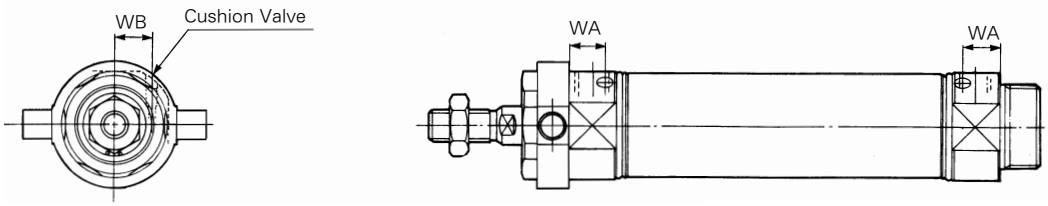

(Unit : mm)

Bore Size	Stroke Range	A	AL	B_1	B_2	D	E	F	G	H	H_1	I	K	MM	N	NA	NN	P
ø20	~300	18	15.5	13	26	8	$20^{0}_{-0.033}$	13	8	41	5	27	5	M8×1.25	15	24	M20×1.5	1/8
ø25	~300	22	19.5	17	32	10	$26^{0}_{-0.033}$	13	8	45	6	33	5.5	M10×1.25	15	30	M26×1.5	1/8
ø32	~300	22	19.5	17	32	12	$26^{0}_{-0.033}$	13	8	45	6	37.5	5.5	M10×1.25	15	34.5	M26×1.5	1/8
ø40	~300	24	21	22	41	14	$32^{0}_{-0.039}$	16	11	50	8	46.5	7	M14×1.5	21.5	42.5	M32×2	1/4

(Unit : mm)

Bore Size	S	TD	TT	TX	TY	TZ	Z	ZZ
ø20	62	8	10	32	32	52	36	116
ø25	62	9	10	40	40	60	40	120
ø32	64	9	10	40	40	60	40	122
ø40	88	10	11	53	53	77	44.5	154

Boss-cut type

Bore Size	ZZ
ø20	103
ø25	107
ø32	109
ø40	138

With air cushion

Bore Size	WA	WB
ø20	11.5	8.5
ø25	11.5	10
ø32	11.5	11.5
ø40	14.5	15

Head Side Trunnion Type (T)

AXT (Bore Size)—(Stroke) ◯

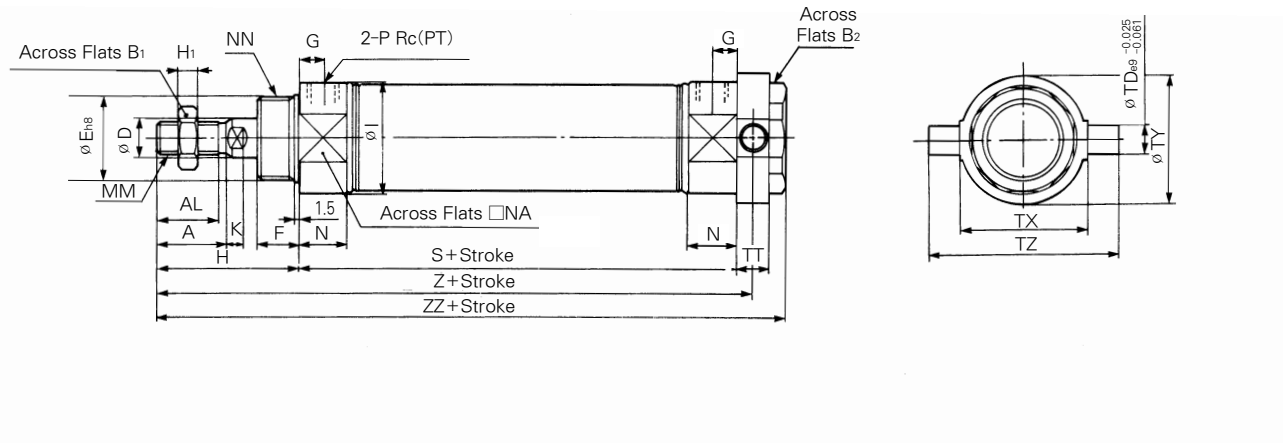

With Air Cushion

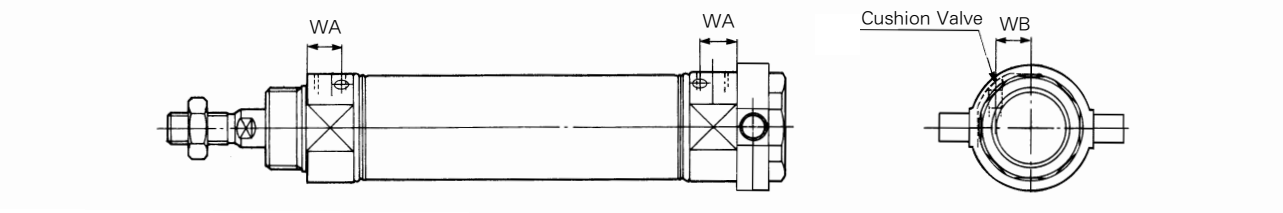

(Unit : mm)

Bore Size	Stroke Range	A	AL	B1	B2	D	E	F	G	H	H1	I	K	MM	N	NA	NN	P
ø20	~300	18	15.5	13	26	8	$20^{0}_{-0.033}$	13	8	41	5	27	5	M8×1.25	15	24	M20×1.5	1/8
ø25	~300	22	19.5	17	32	10	$26^{0}_{-0.033}$	13	8	45	6	33	5.5	M10×1.25	15	30	M26×1.5	1/8
ø32	~300	22	19.5	17	32	12	$26^{0}_{-0.033}$	13	8	45	6	37.5	5.5	M10×1.25	15	34.5	M26×1.5	1/8
ø40	~300	24	21	22	41	14	$32^{0}_{-0.039}$	16	11	50	8	46.5	7	M14×1.5	21.5	42.5	M32×2	1/4

(Unit : mm)

Bore Size	S	TD	TT	TX	TY	TZ	Z	ZZ
ø20	62	8	10	32	32	52	108	118
ø25	62	9	10	40	40	60	112	122
ø32	64	9	10	40	40	60	114	124
ø40	88	10	11	53	53	77	143.5	154

With Air Cushion

Bore Size	WA	WB
ø20	11.5	8.5
ø25	11.5	10
ø32	11.5	11.5
ø40	14.5	15

Integrated Clevis Type (E)

AXE Bore Size — Stroke

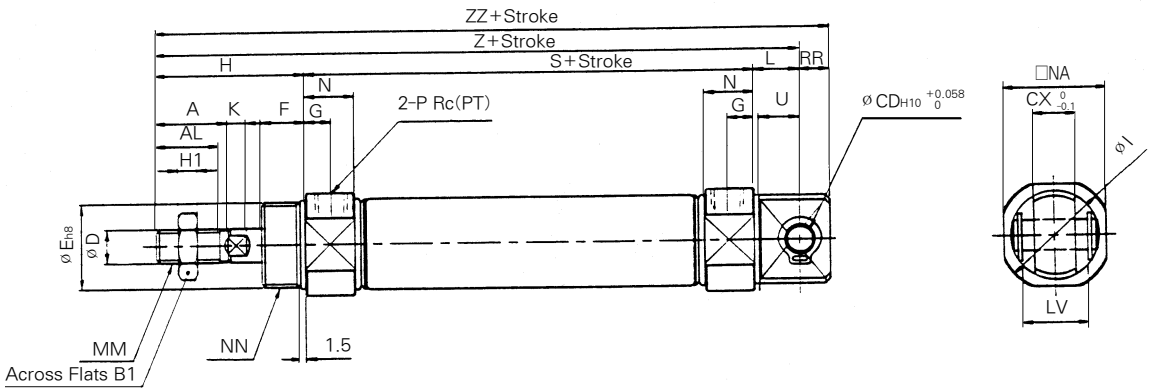

With Air Cushion

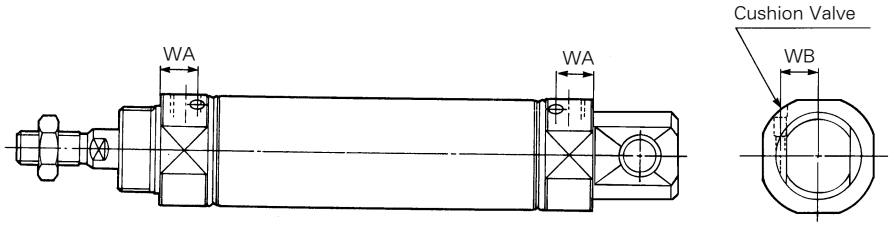

(Unit : mm)

Bore Size	Stroke Range	A	AL	B_1	CD	CX	D	E	F	G	H	H_1	I	K	L	MM	N	NA	NN
ø20	~300	18	15.5	13	8	12	8	$20^{0}_{-0.033}$	13	8	41	5	27	5	12	M8×1.25	15	24	M20×1.5
ø25	~300	22	19.5	17	8	12	10	$26^{0}_{-0.033}$	13	8	45	6	33	5.5	12	M10×1.25	15	30	M26×1.5
ø32	~300	22	19.5	17	10	20	12	$26^{0}_{-0.033}$	13	8	45	6	37.5	5.5	15	M10×1.25	15	34.5	M26×1.5
ø40	~300	24	21	22	10	20	14	$32^{0}_{-0.039}$	16	11	50	8	46.5	7	15	M14×1.5	21.5	42.5	M32×2

(Unit : mm)

Bore Size	P	RR	S	U	Z	ZZ	LV
ø20	1/8	9	62	11.5	115	124	18.4
ø25	1/8	9	62	11.5	119	128	18.4
ø32	1/8	12	64	14.5	124	136	28
ø40	1/4	12	88	14.5	153	165	28

With Air Cushion

Bore Size	WA	WB
ø20	11.5	8.5
ø25	11.5	10
ø32	11.5	11.5
ø40	14.5	15

Accessories/Dimensions

Single Knuckle Joint

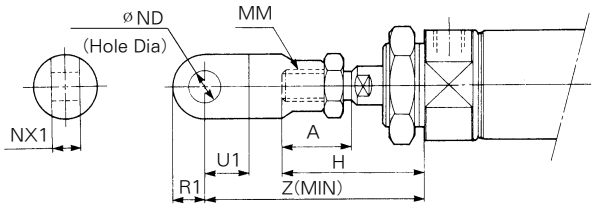

Bore Size	A	H	MM	ø ND^{H10}	NX$_1$	U$_1$	R$_1$	Z
ø 20	18	41	M8×1.25	$9^{+0.058}_{0}$	$9^{-0.1}_{-0.2}$	14	10	66
ø 25 · ø 32	22	45	M10×1.25	$9^{+0.058}_{0}$	$9^{-0.1}_{-0.2}$	14	10	69
ø 40	24	50	M14×1.5	$12^{+0.070}_{0}$	$16^{-0.1}_{-0.3}$	20	15.5	92

Single Knuckle Joint

TI-020B, 032B

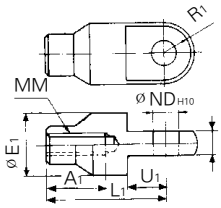

TI-040B

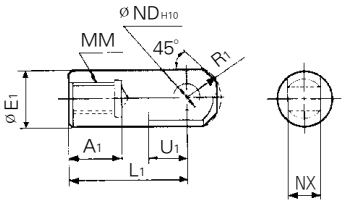

Material : Rolled Steel

Material : Free Cutting Sulfur Steel

Part No.	Applicable Bore size	A$_1$	E$_1$	L$_1$	MM	ND^{H10}	NX	R$_1$	U$_1$
TI-020B	ø 20	16	20	36	M8×1.25	$9^{+0.058}_{0}$	$9^{-0.1}_{-0.2}$	10	14
TI-032B	ø25 · ø32	18	20	38	M10×1.25	$9^{+0.058}_{0}$	$9^{-0.1}_{-0.2}$	10	14
TI-040B	ø 40	22	24	55	M14×1.5	$12^{+0.070}_{0}$	$16^{-0.1}_{-0.3}$	15.5	20

Double Knuckle Joint

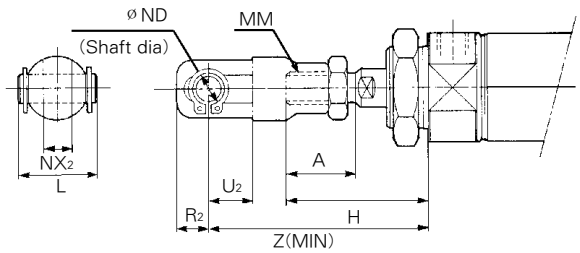

Bore Size	A	H	L	MM	ø NDd$_9$	NX$_2$	R$_2$	U$_2$	Z
ø 20	18	41	25	M8×1.25	$9^{-0.040}_{0.076}$	$9^{+0.2}_{+0.1}$	10	14	66
ø 25 · ø 32	22	45	25	M10×1.25	$9^{-0.040}_{0.076}$	$9^{+0.2}_{+0.1}$	10	14	69
ø 40	24	50	49.7	M14×1.5	$12^{-0.050}_{0.093}$	$16^{+0.3}_{+0.1}$	13	25	92

Double Knuckle Joint

TY-020B, 032B

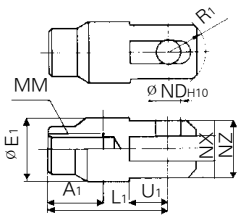

TY-040B

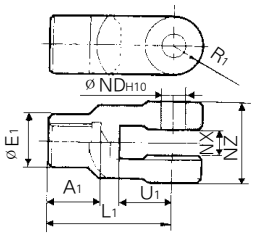

Material : Rolled steel

Material : Cast iron

Part No.	Applicable Bore size	A$_1$	E$_1$	L$_1$	MM	ND^{H10}	NX	NZ	R$_1$	U$_1$	Applicable pin part NO.
TY-020B	ø 20	16	20	36	M8×1.25	$9^{+0.058}_{0}$	$9^{+0.2}_{+0.1}$	18	12	14	TCDP-1
TY-032B	ø 25 · ø 32	18	20	38	M10×1.25	$9^{+0.058}_{0}$	$9^{+0.2}_{+0.1}$	18	12	14	TCDP-1
TY-040B	ø 40	22	24	55	M14×1.5	$12^{+0.070}_{0}$	$16^{+0.3}_{+0.1}$	38	13	25	TCDP-3

Clevis Pin, Knuckle Pin

Applicable Bore Size : ø 20, ø 25, ø 32

TCDP-1

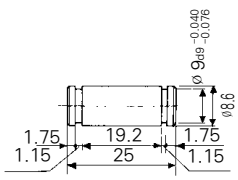

Material:Carbon Steel
Retaining Pin:C9 Type For Pivot

Clevis Pin, Knuckle Pin

Applicable Bore Size : ø 40

TCDP-2

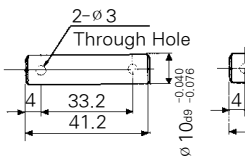

TCDP-3

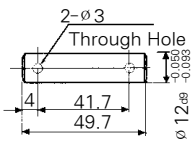

Material:Carbon Steel
Material:Carbon Steel
Applicable Split Pin : ø 0.12×0.71 l

TPC PNEUMATICS

Accessories/Dimensions

Rod End Nut

Material : Carbon Steel

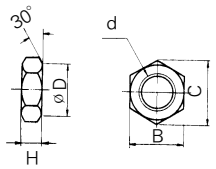

Mounting Nut

Material : Carbon Steel

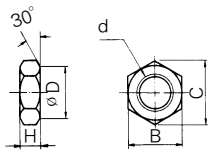

Trunnion Nut

Material : Carbon Steel

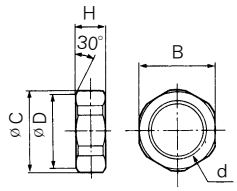

(Unit : mm)

Part No.	Applicable bore size	B	C	D	d	H
TNT-02	ø 20	13	15.5	12.5	M8×1.25	5
TNT-03	ø 25 · ø 32	17	19.6	16.5	M10×1.25	6
TNT-04	ø 40	22	25.4	21.0	M14×1.5	8

Part No.	Applicable bore size	B	C	D	d	H
TSN-020B	ø 20	26	30	25.5	M20×1.5	8
TSN-032B	ø 25 · ø 32	32	37	31.5	M26×1.5	8
TSN-040B	ø 40	41	47.3	40.5	M32×2.0	10

Part No.	Applicable bore size	B	C	D	d	H
TN-020B	ø 20	26	28	25.5	M20×1.5	10
TN-032B	ø 25 · ø 32	32	34	31.5	M26×1.5	10
TN-040B	ø 40	41	45	40.5	M32×2	10

Reed Switch Setting Position (Stroke End)

W5

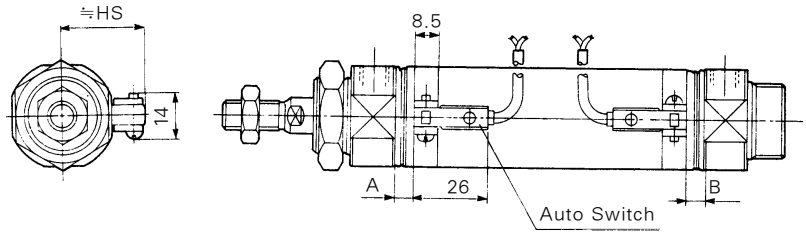

Bore Size

Bore Size	W5		
	A	B	Hs
ø 20	7	6	22.5
ø 25	7	6	25
ø 32	8	7	28.5
ø 40	13	12	32.5

Auto Switch Mounting, Minimum Possible Cylinder Strokes (mm)

Auto Switch Type	No. of Auto Switch				1pc.
	2pcs.		n pcs.		
	Different Surface	Same Surface	Different Orientation	Same Orientation	
W5	15	50	$15+45(\frac{n-2}{2})$ (n=2, 4, 6, 8 ···)	50+45(n-2)	10

① Adjustable Stroke Cylinder/Extension Adjustable Type

AX (Mounting) (Type) (Bore Size) — (Stroke) (Additional Symbol) (Stroke Adjusting Symbol) — XC8

Additional Symbol
Blank-With Boot
J-With Boot(Nylon Tarpaulin)
K-With Boot(Neoprene Cloth)

Stroke Adjusting Symbol
A-Stroke Adjusting Range 0~25mm
B-Stroke Adjusting Range 0~50mm

The Extended Stroke of the cylinder can be adjusted by the stopper in the head side.

Symbol

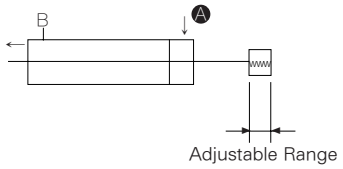

Specifications

Fluid	Air
Proof Pressure	15kgf/cm² (1.5MPa)
Max. Operating Pressure	9.9kgf/cm² (1.0MPa)
Min. Operating Pressure	0.5kgf/cm² (0.05MPa)
Piston Speed	50~750 mm/sec
Cushion	Rubber Cushion(Standard)
Stroke Adjusting System	Adjusting Stopper
Stroke Adjusting Range	A : 0~25mm, B : 0~50mm
Mounting	Basic Type, Axial Foot Type, Rod Side Flange Type, Head Side Flange Type, Rod Side Trunnion Type
Applicable Bore Size(mm)	ø20, ø25, ø32, ø40

Construction, Dimensions/Basic Type

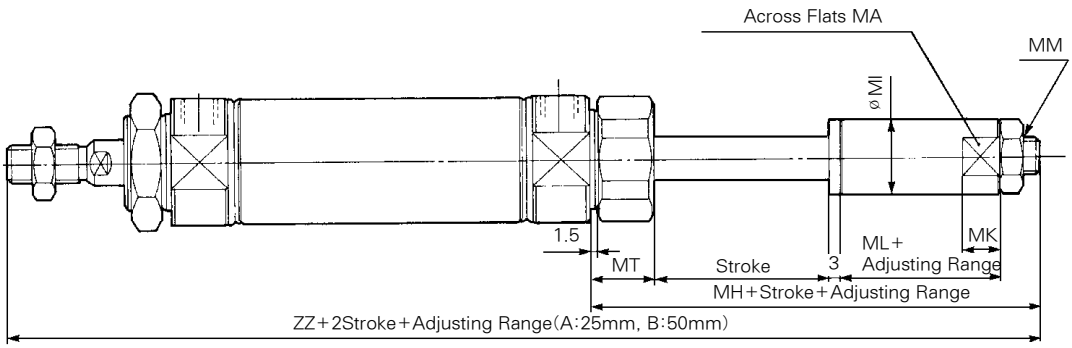

(Unit: mm)

Bore Size	MA	MK	MI	MM	MT	MH	ML	ZZ
ø20	12	8	15	M8×1.25	16.5	47	18	150
ø25	17	10	20	M10×1.25	17.5	49	18	156
ø32	17	10	20	M10×1.25	17.5	49	18	158
ø40	22	12	25	M14×1.5	21.5	60	22	198

※ Other dimensions are the same as for standard type.

② Adjustable Stroke Cylinder/Retraction Adjustable Type

AX (Mounting) (Type) (Bore Size) — (Stroke) (Additional Symbol) (Stroke Adjusting Symbol) — XC9

Additional symbol
Blank-Without Boot
J-With Boot(Nylon tarpaulin)
K-With Boot(Neoprene cloth)

Stroke Adjusting Symbol
A-Stroke Adjusting Range 0~25mm
B-Stroke Adjusting Range 0~50mm

The Retracted Stroke of the cylinder can be adjusted from (0~25)mm or (0~50)mm by the adjusting bolt

Symbol

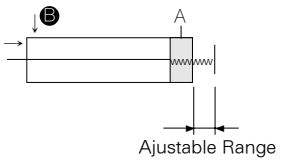

Specifications

Fluid	Air
Proof Pressure	15kgf/cm² (1.5MPa)
Max. Operating Pressure	9.9kgf/cm² (1.0MPa)
Min. Operating Pressure	0.5kgf/cm² (0.05MPa)
Piston Speed	50~750mm/sec
Cushion	Rubber cushion(Standard)
Stroke Adjusting System	Stopper adjustment
Stroke Adjusting Range	A : 0~25mm, B : 0~50mm
Mounting	Basic Type, Axial Foot Type, Rod Side Flange Type, Head Side Flange Type, Rod Side Trunnion Type, Head Side Trunnion Type
Applicable Bore Size(mm)	ø20, ø25, ø32, ø40
Stroke Range	~300 mm

Construction, Dimensions/Basic Type

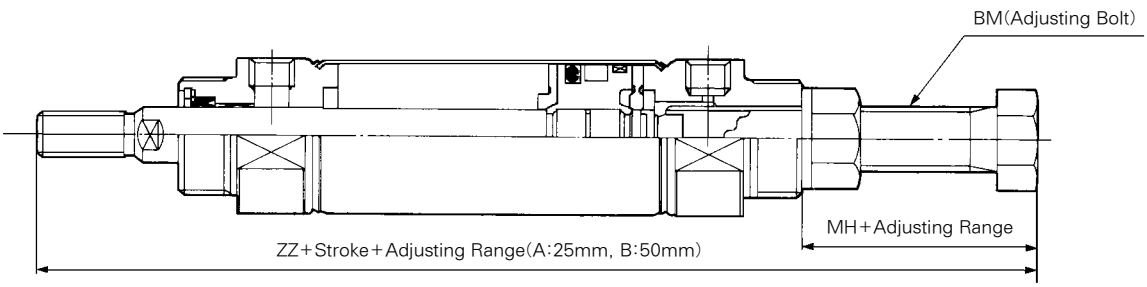

(Unit : mm)

Bore Size	BM	MH	ZZ
ø20	M8×1.25	20	136
ø25	M8×1.25	20	140
ø32	M8×1.25	20	142
ø40	M12×1.75	24	178

※ Other dimensions are the same as for standard type.

③ Dual Stroke Cylinder/Single Rod Type

AX (Mounting) (Type) (Bore Size) — (Stroke A) (Additional Symbol) + (Stroke B) (Additional Symbol) — XC10

Additional symbol ●
Blank-With Boot
J-With Boot(Nylon tarpaulin)
K-With Boot(Neoprene cloth)

Two cylinders are constructed as one cylinder in a back-to-back configuraton allowing the cylinder stroke to be controlled in three steps.

Symbol

Function

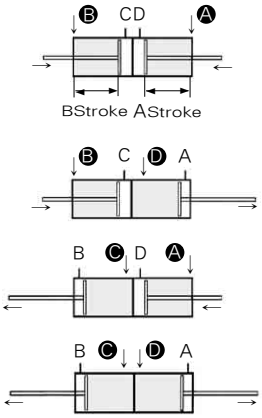

When air pressure is supplied to ports Ⓐ and Ⓑ, both A and B strokes retract.

When air pressure is supplied to ports Ⓑ and Ⓓ, A stroke extends.

When air pressure is supplied to ports Ⓐ and ⓒ, B stroke extemds.

When air pressure is supplied to ports ⓒ and Ⓓ, both strokes A and B out strokes.

Specifications

Type	Non-lube
Fluid	Air
Proof Pressure	15kgf/cm² (1.5MPa)
Max. Operating Pressure	9.9kgf/cm² (1.0MPa)
Min. Operating Pressure	0.5kgf/cm² (0.05MPa)
Piston Speed	50~750 mm/sec
Cushion	Rubber cushion(Standard)
Mounting	Basic type, Foot type, Flange type
Applicable Bore Size(mm)	ø20, ø25, ø32, ø40
Stroke A, B	~300 mm

Construction, Dimensions/Basic Type

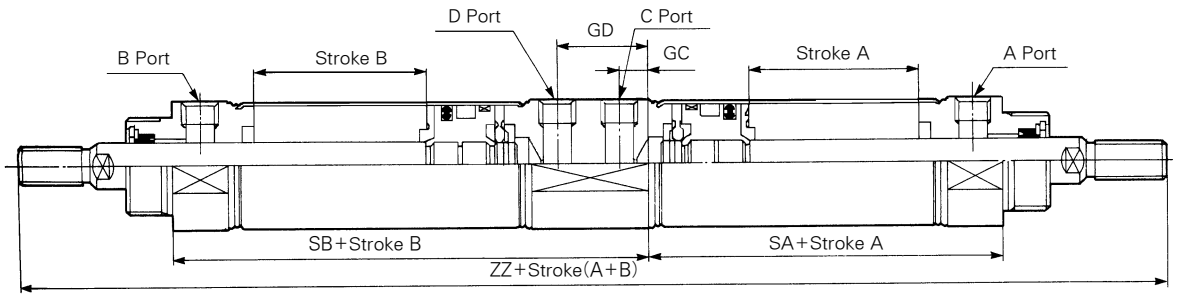

(Unit : mm)

Bore Size	GC	GD	SA	SB	ZZ
ø20	7	24	47	78	207
ø25	7	24	47	78	215
ø32	7	24	49	80	219
ø40	10.5	33.5	66.5	110.5	277

※ Other dimensions are the same as for standard type.

④ Dual Stroke Cylinder/Single Rod Type

AX (Mounting) (Type) (Bore Size) — (Stroke A) + (Stroke B - A) (Additional Symbol) — XC11

Additional Symbol ●
Blank-With Boot
J-With Boot(Nylon tarpaulin)
K-With Boot(Neoprene cloth)

Symbol

Function

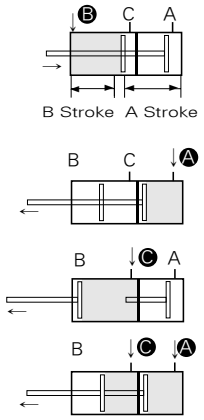

When air pressure is supplied to the Ⓑ port, both A and B strokes retract.

When air pressure is supplied to the Ⓐ port, the rod extends by A Stroke.

When air pressure is supplied to the ⓒ port, the rod extends.

When air pressure is supplied to both ports Ⓐ and ⓒ double output force is obtainable in the range of the A stroke length.

Specifications

Fluid	Air
Proof Pressure	15kgf/cm² (1.5MPa)
Max. Operating Pressure	9.9kgf/cm² (1.0MPa)
Min. Operating Pressure	0.5kgf/cm² (0.05MPa)
Piston Speed	50~750 mm/sec
Cushion	Rubber Cushion (Standard)
Mounting	Basic Type, Foot Type, Rod Side Flange Type Head Side Flange type Single Clevis Type, Double Clevis Type.
Applicable Bore Size(mm)	ø20, ø25, ø32, ø40
Stroke	~300 mm

Construction, Dimensions/Basic Type

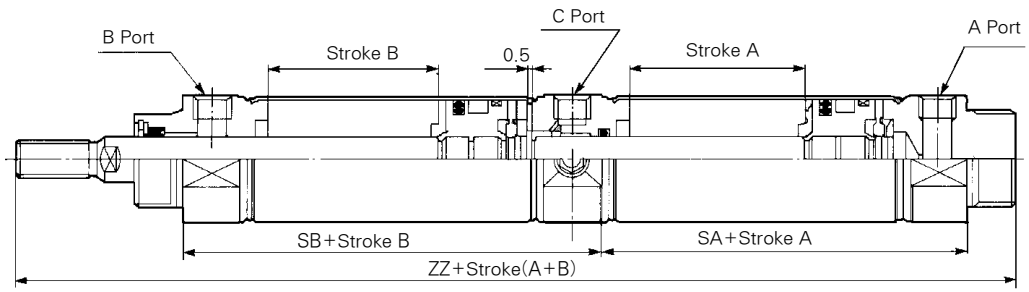

(Unit : mm)

Bore Size	SA	SB	ZZ
ø20	48	62	164
ø25	48	62	168
ø32	50	64	172
ø40	67.5	88.5	222

※ Other dimensions are the same as for standard type.

⑤ Tandem Type Air Cylinder

AX (Mounting) (Type) (Bore Size) — (Stroke) — XC12

This is a cylinder produced with two air cylinders in line allowing double the output force.

Symbol

Function

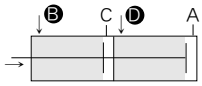

When air pressure is supplied to ports Ⓑ and Ⓓ, the output force is doubled in the retract stroke.

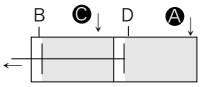

When air pressure is supplied to ports Ⓐ and ⓒ, the output force is doubled in the extend stroke.

Specifications

Type	Air cylinder
Applicable Bore Size	ø20, ø25, ø32, ø40
Max. Operating Pressure	9.9kgf/cm² (1.0 MPa)
Min. Operating Pressure	0.8kgf/cm² (0.08 MPa)
Cushion	Rubber Cushion (Standard)
Action	Double Acting
Mounting	Basic Type, Axial Foot Type, Rod Side Flange Type, Head Side Flange Type, Single Clevis Type, Double Clevis Type

Construction

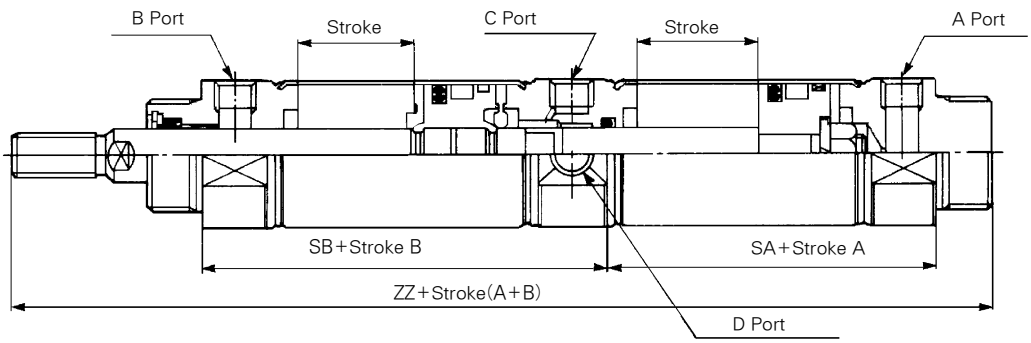

(Unit : mm)

Bore Size	SA	SB	ZZ
ø20	48	62	164
ø25	48	62	168
ø32	50	64	172
ø40	67.5	88.5	222

※ Other dimensions are the same as for standard type.

Series AXW

Standard Type/Double Acting : Double Rod

Bore Size(mm) : ø20, ø25, ø32, ø40

- STAINLESS STEEL BODY
- HIGH CYCLE LIFE
- LOW BREAKAWAY
- NUMEROUS MOUNTING OPTION
- MAGNET STANDARD FOR AUTO SWITCH
- BUMPERS STANDARD (AIR CUSHION OPTIONAL)
- DESIGNED FOR NON-LUBRICATED SERVICE
- COMPACT LIGHT DESIGN
- REPLACEABLE ROD GLAND
- MANUFACTURING CERTIFIED TO ISO 9001 / 9002

Symbol

Double Acting/Double Rod

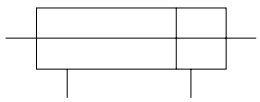

How to Order

AXW ○ 40 - 75 A J - ○ - W5 ○

1 2 3 4 5 6 7 8 9

1 Double Rod Type
(Built-in Magnet Standard)

2 Mounting
B : Basic Type
L : Foot Type
F : Flange Type
U : Trunnion Type

3 Bore Size(mm)
20 : ø20
25 : ø25
32 : ø32
40 : ø40

4 Stroke(mm)
※ For Stroke Refer to page 23.

5 Cushion
Blank : Rubber Cushion
A : Air Cushion

6 Rod Boot Option
Blank : Without Boot
J : Nylon Tarpaulin(Single side)
JJ : Nylon Tarpaulin(Both side)
K : Neoprene Cloth(Single side)
KK : Neoprene Cloth(Both side)

7 Special Option
Blank : Standard type
XC16 : Copper-free

8 Applicable Auto Switch
Reed Switch
(Band mounted type)
(Grommet)
Blank : Without auto switch
W5 : W5
※Standard Lead Length 0.5m
(up to 3m optional)

9 Number of Switches
Blank : 2 pcs.
S : 1 pc.
n : (n) pcs.

Model

Bore size(mm)	ø20	ø25	ø32	ø40
Type	Air Cylinder			
Cushion	Rubber Cushion, Air Cushion			
Piping Method	1/8 Rc(PT)	1/8 Rc(PT)	1/8 Rc(PT)	1/4 Rc(PT)

Standard Stroke List

Action	Double Acting Double Rod
Fluid	Air
Proof Pressure	15kgf/cm² (1.5 MPa)
Max. Operating Pressure	9.9kgf/cm² (1.0 MPa)
Min. Operating Pressure	0.5kgf/cm² (0.05 MPa)
Ambient and Fluid Temperature	40~140° F (5~60° C)
Lubrication	None (Non-Lube)
Thread Tolerance	KS 2 Class
Storke Tolerance	$^{+1.4}_{0}$ mm

Piston Speed

Bore Size(mm)	ø20	ø20	ø32	ø32
Piston Speed(mm/sec)	50~750			
Allowable Kinetic Energy(kgf/cm)	2.7	4	6.5	12

Auto Switch Specifications

Mounting	Lead Wire Entry	Reed Switch
Band Mounted Type	Grommet	W5

Standard Stroke

Bore Size(mm)	Standard Stroke	※Long stroke	Production Max.Stroke
ø20	25, 50, 75, 100, 125, 150, 200, 250, 300	400	500
ø25		450	
ø32		450	
ø40		500	

※ A long stroke applies to the foot type and the flange type. For other mountings and case exceeding the Standard stroke limit, the max.

Mounting and Accessories

Mounting \ Accessories	Standard		Option		
	Mounting Nut	Rod end Nut	Single Knuckle Joint	Double Knuckle Joint	Rod Boot
Basic Type	●(2pcs)	●(2pcs)	●	●	●
Foot Type	●(2pcs)	●(2pcs)	●	●	●
Flange Type	●(1pc)	●(2pcs)	●	●	●
Trunnion Type	●(1pc)	●(2pcs)	●	●	●
Note				With pin	Single, Both side

Material of gaiter

Symbol		Material of Boot	Max. Ambient Temperature
Single Side	Both Side		
J	JJ	Nylon tarpaulin	140°F(60°C)
K	KK	Neoprene cloth	※230°F(110°C)

※ The max. ambient temperature of Boot only.

Weight Table

(kgf)

Bore Size(mm)		ø20	ø25	ø32	ø40
Basic Weight	Basic Type	0.16	0.25	0.32	0.65
	Foot Type	0.31	0.41	0.48	0.92
	Flange Type	0.22	0.34	0.41	0.77
	Trunnion Type	0.20	0.32	0.38	0.75
Additional weight for each 50 of stroke		0.06	0.09	0.13	0.19
Mounting Bracket	Single Knuckle Joint	0.06	0.06	0.06	0.23
	Double Knuckle Joint(with pin)	0.07	0.07	0.07	0.20

Calculation (Example) **AXWL32-100**

- Basic weight-0.48(Foot type, ø32)
- Additional weight-0.13/50 stroke
- Cylinder stroke -100 stroke
- 0.48+0.13x100/50=0.74kgf

With Air Cushion

AXW (Mounting)(Bore Size)(Piping Method)—(Stroke) A (Boot)

A: With Air Cushion

With covers on both sides equipped with the cushion function, the cylinder absorbs the impact during high-speed operation without vibrating the section around it, and the cylinder provides longer life.

Specifications

Action	Double acting double rod
Bore Size	ø20, ø25, ø32, ø40
Max. Operating Pressure	140PSI (1.0MPa)
Min. Operating Pressure	70PSI (0.05MPa)
Cushion	Air Cushion
Piping Method	Screwed Type
Piston Speed	50~1,000mm/sec
Mounting	Basic Type, Foot Type, Flange Type, Trunnion Type

※Auto switch Available

Cushion Mechanism

Bore Size (mm)	Effective Cushion Length(mm)	Cushion Effective oriffice(mm^2)	Allowable Kinetic Energy(kgf-cm)
ø20	11.0	2.09	5.5
ø25	11.0	3.30	8.0
ø32	11.0	5.86	13
ø40	11.8	9.08	24

Construction/Parts List

Standard

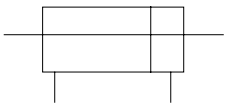

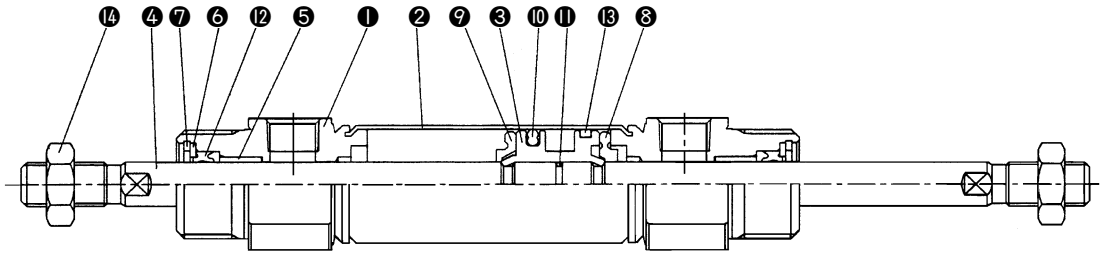

With Air Cushion

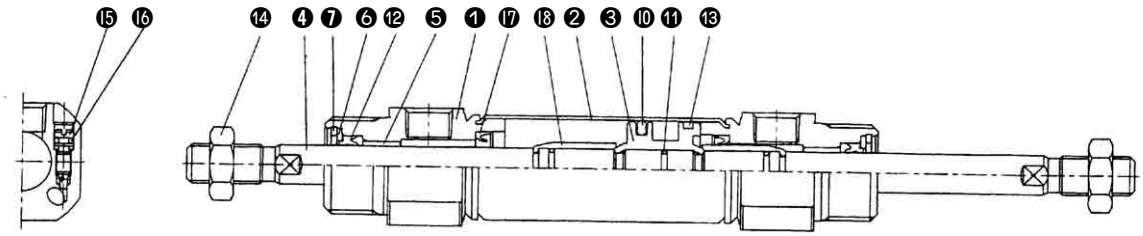

Parts List

No.	Description	Material	Note
❶	Rod Cover	Aluminum Alloy	White Alumite
❷	Cylinder Tube	Stainless Steel	
❸	Piston	Aluminum Alloy	Chromate
❹	Pistin Rod	Carbon Steel	Hard Chrome Plated
❺	Bush	Sintered Metal	
❻	Packing Retainer	Rolled Steel	Nickel Plated
❼	Stopper Ring	Carbon Steel	Nickel Plated
❽	Damper A	Urethane	
❾	Damper B	Urethane	
❿	Piston Packing	NBR	
⓫	Piston Gasket	NBR	
⓭	Wear Ring	-	

No.	Descripion	Material	Note
⓮	Rod End Nut	-	Nickel Plated
⓯	Cushion Valve	-	Nickel Plated
⓰	Cushion Valve Gasket	NBR	
⓱	Cushion Packing	NBR	
⓲	Cushion Ring	-	

Spare Parts/ Packing List

•With Rubber Cushion /With Air Cushion

No.	Description	Material	Bore Size(mm)			
			Ø 20	Ø 25	Ø 32	Ø 40
⓬	Rod Packing	NBR	PDU-8Z	PDU-10Z	PDU-12LZ	PDU-14LZ

Basic Type(B)

AXWB (Bore Size)—(Stoke)

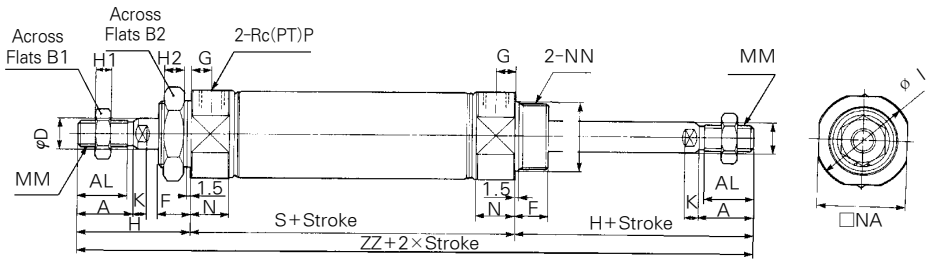

With Rod Boot(Both side)

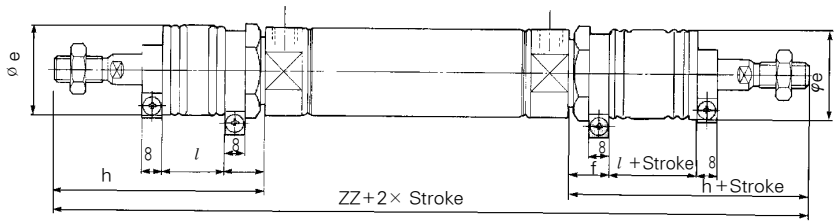

With air cushion

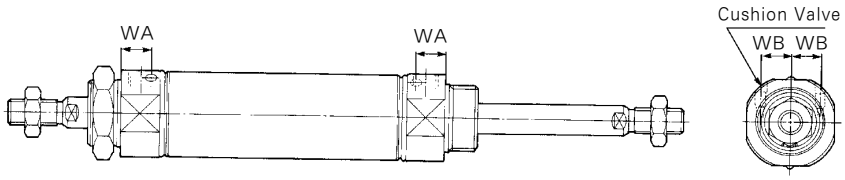

※ 301mm Stroke or more : Long Stroke

(Unit : mm)

Bore Size	Stroke Range	A	AL	B_1	B_2	D	E	F	G	H	H_1	H_2	I	K	MM	N	NA	NN	P	S	ZZ
ø20	~300	18	15.5	13	26	8	$20^{0}_{-0.033}$	13	8	41	5	8	27	5	M8×1.25	15	24	M20×1.5	1/8	62	144
ø25	~300	22	19.5	17	32	10	$26^{0}_{-0.033}$	13	8	45	6	8	33	5.5	M10×1.25	15	30	M26×1.5	1/8	62	152
ø32	~300	22	19.5	17	32	12	$26^{0}_{-0.033}$	13	8	45	6	8	37.5	5.5	M10×1.25	15	34.5	M26×1.5	1/8	64	154
ø40	~300	24	21	22	41	14	$32^{0}_{-0.039}$	16	11	50	8	10	46.5	7	M14×1.5	21.5	42.5	M32×2	1/4	88	188

With Gaiter

Bore Size	e	f	h							l							ZZ						
			1~50	51~100	101~150	151~200	201~300	301~400	401~500	1~50	51~100	101~150	151~200	201~300	301~400	401~500	1~50	51~100	101~150	151~200	201~300	301~400	401~500
ø20	30	16	68	81	93	106	131	156	–	12.5	25	37.5	50	75	100	–	198	224	248	274	324	374	–
ø25	30	16	72	85	97	110	135	160	185	12.5	25	37.5	50	75	100	125	206	232	256	282	332	382	432
ø32	30	16	72	85	97	110	135	160	185	12.5	25	37.5	50	75	100	125	208	234	258	284	334	384	434
ø40	40	18	77	90	102	115	140	165	190	12.5	25	37.5	50	75	100	125	242	268	292	318	368	418	468

With Air Cushion

Bore size	WA	WB
ø20	11.5	8.5
ø25	11.5	10
ø32	11.5	11.5
ø40	14.5	15

Foot Type(L)

AXWL Bore Size — Stroke

Standard

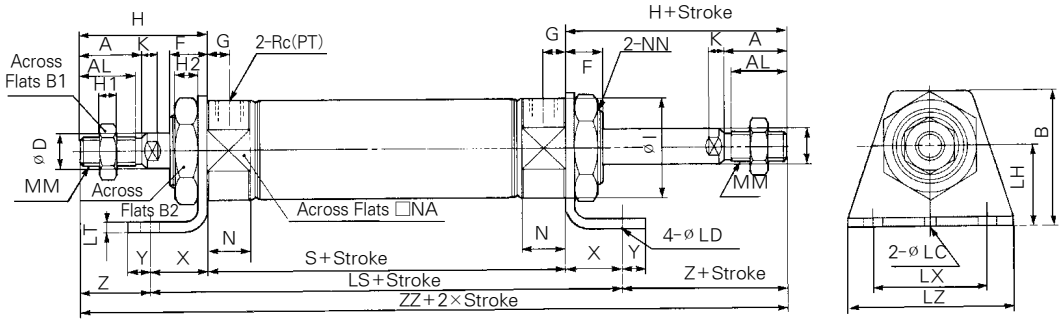

With Air Cushion

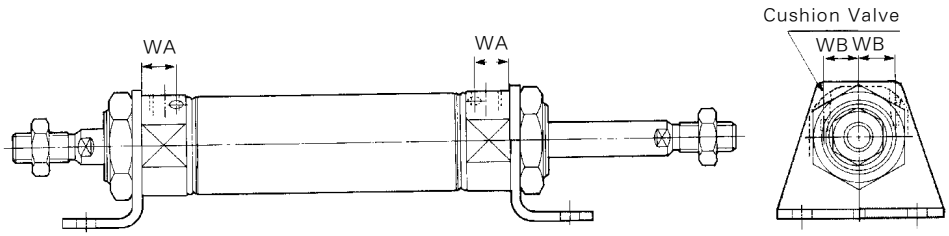

(Unit : mm)

Bore Size	Stroke Rangde	A	AL	B	B_1	B_2	D	F	G	H	H_1	H2	I	K	LC	LD	LH	LS	LT	LX	LZ	MM	N	NA	NN	P	S	X	Y	Z	ZZ
ø20	~400	18	15.5	40	13	26	8	13	8	41	5	8	27	5	4	6.8	25	102	3.2	40	55	M8×1.25	15	24	M20×1.5	1/8	62	20	8	21	144
ø25	~450	22	19.5	47	17	32	10	13	8	45	6	8	33	5.5	4	6.8	28	102	3.2	40	55	M10×1.25	15	30	M26×1.5	1/8	62	20	8	25	152
ø32	~450	22	19.5	47	17	32	12	13	8	45	6	8	37.5	5.5	4	6.8	28	104	3.2	40	55	M10×1.25	15	34.5	M26×1.5	1/8	64	20	8	25	154
ø40	~500	24	21	54	22	41	14	16	11	50	8	10	46.5	7	4	7	30	134	3.2	55	75	M14×1.5	21.5	42.5	M32×2	1/4	88	23	10	27	188

With air cushion

Bore size	WA	WB
ø20	11.5	8.5
ø25	11.5	10
ø32	11.5	11.5
ø40	14.5	15

Foot Type(F)

AXWF (Bore Size) — (Stroke) ◯

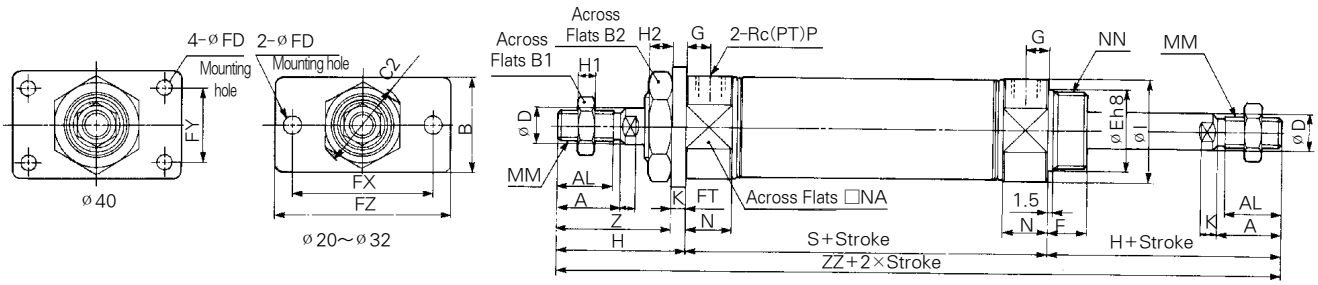

With Air Cushion

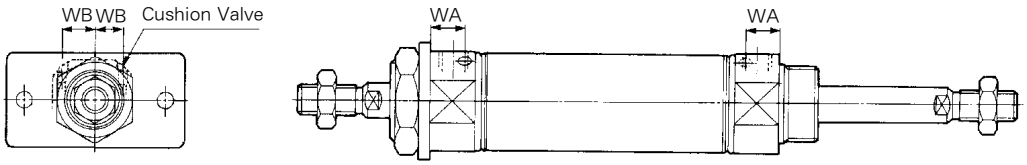

(Unit : mm)

Bore Size	Stroke Range	A	AL	B	B_1	B_2	C_2	D	E	F	FD	FT	FX	FY	FZ	G	H	H_1	H_2	I	K	MM
ø**20**	～300	18	15.5	34	13	26	30	8	$20^{0}_{-0.033}$	13	7	4	60	—	75	8	41	5	8	27	5	M8×1.25
ø**25**	～300	22	19.5	40	17	32	37	10	$26^{0}_{-0.033}$	13	7	4	60	—	75	8	45	6	8	33	5.5	M10×1.25
ø**32**	～300	22	19.5	40	17	32	37	12	$26^{0}_{-0.033}$	13	7	4	60	—	75	8	45	6	8	37.5	5.5	M10×1.25
ø**40**	～300	24	21	52	22	41	47.3	14	$32^{0}_{-0.039}$	16	7	5	66	36	82	11	50	8	10	46.5	7	M14×1.5

(Unit : mm)

Bore Size	N	NA	NN	P	S	Z	ZZ
ø**20**	15	24	M20×1.5	1/8	62	37	144
ø**25**	15	30	M26×1.5	1/8	62	41	152
ø**32**	15	34.5	M26×1.5	1/8	64	41	154
ø**40**	21.5	42.5	M32×2	1/4	88	45	188

With Air Cushion

Bore size	WA	WB
ø**20**	11.5	8.5
ø**25**	11.5	10
ø**32**	11.5	11.5
ø**40**	14.5	15

Trunnion Type(U)

AXWU (Bore Size) — (Stroke) ◯

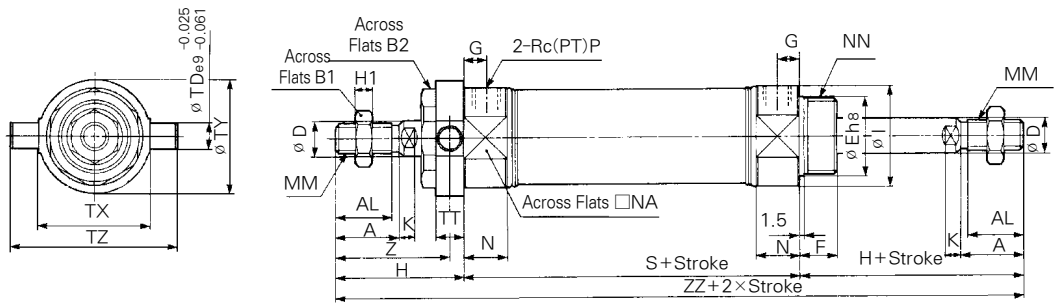

With Air Cushion

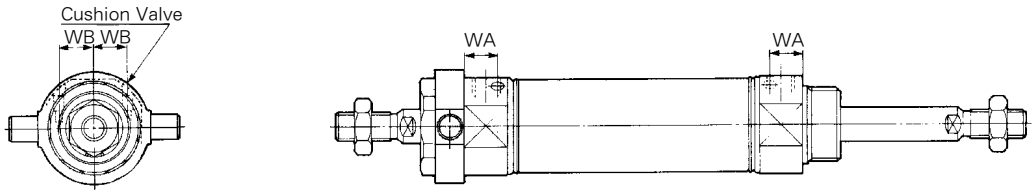

(Unit : mm)

Bore Size	Stroke Range	A	AL	B_1	B_2	D	E	F	G	H	H_1	I	K	MM	N	NA	NN	P	S
ø20	~300	18	15.5	13	26	8	$20^{0}_{-0.033}$	13	8	41	5	27	5	M8×1.25	15	24	M20×1.5	1/8	62
ø25	~300	22	19.5	17	32	10	$26^{0}_{-0.033}$	13	8	45	6	33	5.5	M10×1.25	15	30	M26×1.5	1/8	62
ø32	~300	22	19.5	17	32	12	$26^{0}_{-0.033}$	13	8	45	6	37.5	5.5	M10×1.25	15	34.5	M26×1.5	1/8	64
ø40	~300	24	21	22	41	14	$32^{0}_{-0.039}$	16	11	50	8	46.5	7	M14×1.5	21.5	42.5	M32×2	1/4	88

(Unit : mm)

Bove Size	TD	TT	TX	TY	TZ	Z	ZZ
ø20	8	10	32	32	52	36	144
ø25	9	10	40	40	60	40	152
ø32	9	10	40	40	60	40	154
ø40	10	11	53	53	77	44.5	188

With Air Cushion

Bore Size	WA	WB
ø20	11.5	8.5
ø25	11.5	10
ø32	11.5	11.5
ø40	14.5	15

Series AXS

Standard Type/Single Acting:Spring Return, Spring Extended

Bore Size(mm) : ø20, ø25, ø32, ø40

- STAINLESS STEEL BODY
- HIGH CYCLE LIFE
- LOW BREAKAWAY
- NUMEROUS MOUNTING OPTION
- MAGNET STANDARD FOR AUTO SWITCH
- BUMPERS STANDARD
- DESIGNED FOR NON-LUBRICATED SERVICE
- COMPACT LIGHT DESIGN
- REPLACEABLE ROD GLAND
- MANUFACTURING CRETIFIED TO ISO 9001 / 9002

Symbol

· Single acting spring return

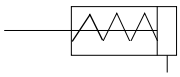

· Single acting spring exterded

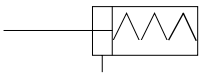

How to Order

AXS L 32 — 40 S — ○ — W5 □

1 2 3 4 5 6 7 8

1 Type:Single Acting

2 Mounting
- B : Basic Type
- L : Axial Foot Type
- F : Rod Side Flange Type
- G : Head Side Flange Type
- C : Single Clevis Type
- D : Double Clevis Type
- T : Head Side Trunnion Type
- U : Rod Side Trunnion Type
- E : Integrated Clevis Type
- BZ : Boss-Cut Basic Type
- FZ : Boss-Cut Flange Type
- UZ : Boss-Cut Trunnion Type

3 Bore Size(mm)
- 20 : ø20
- 25 : ø25
- 32 : ø32
- 40 : ø40

4 Stroke
※ For Stroke Refer to page A-51.

5 Action
- S : Single Acting Spring Return
- T : Single Acting Spring Extended

6 Special Option
- Blank : Standard type
- XC16 : Copper-free

7 Applicable Auto Switch Reed Switch
- Blank : Without auto switch
- W5 : W5

Standard Lead Length 0.5m
(Up to 3m Optional)

8 Number of Switches
- Blank : 2 pcs.
- S : 1 pc.
- n : (n) pcs.

PART No. of Mounting Bracket

Bore Size(mm)	ø20	ø25	ø32	ø40
※Axial foot	TCM-L020B	TCM-L032B		TCM-L040B
Flange	TCM-F020B	TCM-F032B		TCM-F040B
Single Clevis	TCM-C020B	TCM-C032B		TCM-C040B
Double Clevis	TCM-D020B	TCM-D032B		TCM-D040B
Trunnion(With Nut)	TCM-T020B	TCM-T032B		TCM-T040B

※ 2pcs. Required Per Cylinder

PART No. of Auto Switch Mounting Band

Auto Switch Model	Bore Size(mm)			
	ø20	ø25	ø32	ø40
W5	TBM2-020	TBM2-025	TBM2-032	TBM2-040

Model

Bore Size(mm)	Ø20	Ø25	Ø32	Ø40
Type	Air Cylinder			
Cushion	Rubber Cushion			
Piping Method	Rc(PT)1/8	Rc(PT)1/8	Rc(PT)1/8	Rc(PT)1/4

Specifications

Action	Spring Return	Spring Extended
Fluid	Air	
Proof Pressure	15kgf/cm² {1.5MPa}	
Max. Operating Pressure	9.9kgf/cm² {0.9MPa}	
Min. Operating Pressure	1.8kgf/cm² {0.18 MPa}	2.3kgf/cm² {0.23 MPa}
Ambient and Fluid Temperature	40~140°F (5~60°C)	
Lubrication	None(Non-lube)	
Thread Tolerance	KS 2 class	
Stroke Tolerance	$^{+1.4}_{0}$ mm	

Piston Speed

Bore Size(mm)	Ø20	Ø25	Ø32	Ø40
Piston speed(mm/sec)	50~500			
Allowable kinetic energy(kgf-cm)	2.7	4	6.5	12

Standard Stroke

Bore Size(mm)	Standard Stroke(mm)
Ø20	25, 50, 75, 100, 125, 150
Ø25	25, 50, 75, 100, 125, 150
Ø32	25, 50, 75, 100, 125, 150, 200
Ø40	25, 50, 75, 100, 125, 150, 200, 250

Auto Switch Specification

Mounting	Lead Wire Entry	Reed Switch
Band Mounting Type	Grommet	W5

Boss-Cut Type

Boss for the head cover bracket is eliminated and the total length of the cylinder is shortened.

Compared to the Total Length of Cylinder

(Compared to the Basic Type) (mm)

20	25	32	40
▲13	▲13	▲13	▲16

Mounting

- Boss-Cut Basic Type(BZ)
- Boss-Cut Flange Type(FZ)
- Boss-Cut Trunnion Type(UZ)

Mounting and Accessories

Mounting \ Accessories	Standard			Option	
	Mounting Nut	Rod end Nut	Clevis Pin	Single Knuckle Joint	Double Knuckle Joint
Basic Type	●1pc.	●	–	●	●
Axial Foot Type	●2pcs.	●	–	●	●
Rod Side Flange Type	●1pc.	●	–	●	●
Head Side Flange Type	●1pc.	●	–	●	●
Integrated Clevis Type	–	●	–	●	●
Single Clevis Type	–	●	–	●	●
Double Clevis Type	–	●	●	●	●
Head Side Trunnion Type	●1pc.	●	–	●	●
Rod Side Trunnion Type	●1pc.	●	–	●	●
Boss-Cut Basic Type	●1pc.	●	–	●	●
Boss-Cut Flange Type	●1pc.	●	–	●	●
Boss-Cut Trunnion Type	●1pc.	●	–	●	●
Note					With Pin

Weight Table

Spring Return (kgf)

	Bore Size (mm)	ø20	ø25	ø32	ø40
Basic weight	25 stroke	0.20	0.30	0.42	0.77
	50 stroke	0.22	0.33	0.46	0.84
	75 stroke	0.27	0.42	0.58	1.03
	100 stroke	0.29	0.45	0.63	1.09
	125 stroke	0.35	0.54	0.76	1.29
	150 stroke	0.37	0.57	0.80	1.36
	200 stroke	–	–	0.97	1.61
	250 stroke	–	–	–	1.87
Mounting Bracket Weight	Foot Type	0.15	0.16	0.16	0.27
	Flange Type	0.06	0.09	0.09	0.12
	Single Clevis Type	0.04	0.04	0.04	0.09
	Double Clevis Type	0.05	0.06	0.06	0.13
	Trunnion Type	0.04	0.07	0.07	0.10
	Integrated Clevis Type	-0.02	-0.02	-0.01	-0.04
	Boss-Cut Basic Type	-0.01	-0.02	-0.02	-0.03
	Boss-Cut Flange Type	0.05	0.07	0.07	0.09
	Boss-Cut Trunnion Type	0.03	0.05	0.05	0.07
Acces-sories	Single Knuckle Joint	0.06	0.06	0.06	0.23
	Double Knuckle Joint(with pin)	0.07	0.07	0.07	0.20

Spring Extended (kgf)

	Bore Size(mm)	ø20	ø25	ø32	ø40
Basic weight	25 stroke	0.19	0.29	0.40	0.74
	50 stroke	0.21	0.32	0.44	0.81
	75 stroke	0.25	0.39	0.54	0.97
	100 stroke	0.27	0.42	0.58	1.03
	125 stroke	0.32	0.49	0.69	1.20
	150 stroke	0.34	0.52	0.73	1.27
	200 stroke	–	–	0.88	1.49
	250 stroke	–	–	–	1.72
Mounting Bracket Weight	Foot Type	0.15	0.16	0.16	0.27
	Flange Type	0.06	0.09	0.09	0.12
	single Clevis Type	0.04	0.04	0.04	0.09
	Double Clevis Type	0.04	0.06	0.06	0.13
	Trunnion Type	0.04	0.07	0.07	0.10
	Integrated Clevis Type	-0.02	-0.02	-0.01	-0.04
	Boss-Cut Basic Type	-0.01	-0.02	-0.02	-0.03
	Boss-Cut Flange Type	0.05	0.07	0.07	0.09
	Boss-Cut Trunnion Type	0.03	0.05	0.05	0.07
Acces-sories	Single Knuckle Joint	0.06	0.06	0.06	0.23
	Double Knuckle Joint(with pin)	0.07	0.07	0.07	0.20

Calculation Example : AXL32-100S

Basic weight …0.63 kgf(Foot type ø32)

Cylinder stroke …100 stroke

0.63+0.16=0.79kgf

Construction/Parts List

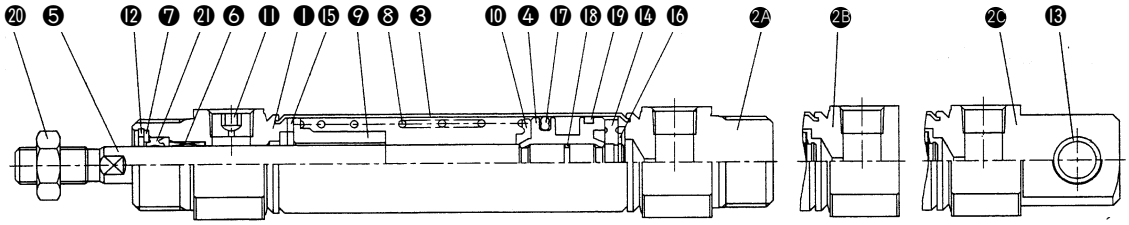

Boss-Cut Type Intergrated Clevis Type

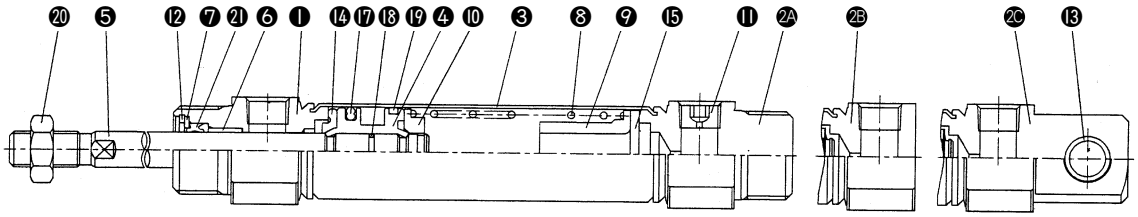

Boss-Cut Type Intergrated Clevis Type

Part List

No.	Description	Material	Remarks
❶	Rod Cover	Aluminum Alloy	White Alumite
2A	Head Cover-A	Aluminum Alloy	White Alumite
2B	Head Cover-B	Aluminum Alloy	White Alumite
2C	Head Cover-C	Aluminum Alloy	White Alumite
❸	Cylinder Tube	Stainless Steel	-
❹	Piston	Aluminum Alloy	Chromate
❺	Piston Rod	Carbon Steel	Hard Chrome Plating
❻	Guide Bush		
❼	Retaining Ring		Nickel Plating
❽	Spring		
❾	Spring Guide	Aluminum Alloy	Chromate
❿	Spring Supporter	Aluminum Alloy	〃
⓫	Plug		
⓬	Stopper Ring		Nickel Plating

No.	Description	Material	Remarks
⓭	Bushing		
⓮	Damper A	Urethane	
⓯	Damper B	Urethane	
⓰	Retaining Ring	Carbon Tool Steel	
⓱	Piston Packing	NBR	
⓲	Piston Gasket	NBR	
⓳	Wear Ring	Resin	
⓪	Rod End Nut	Carbon Steel	Nickel Plating

Packing List

No.	Description	Material	Bore Size(mm)			
			20	25	32	40
㉑	Rod Packing	NBR	PDU-8Z	PDU-10Z	PDU-12LZ	PDU-14LZ

Basic(B)

AXSB (Bore Size) — (Stroke) S/T

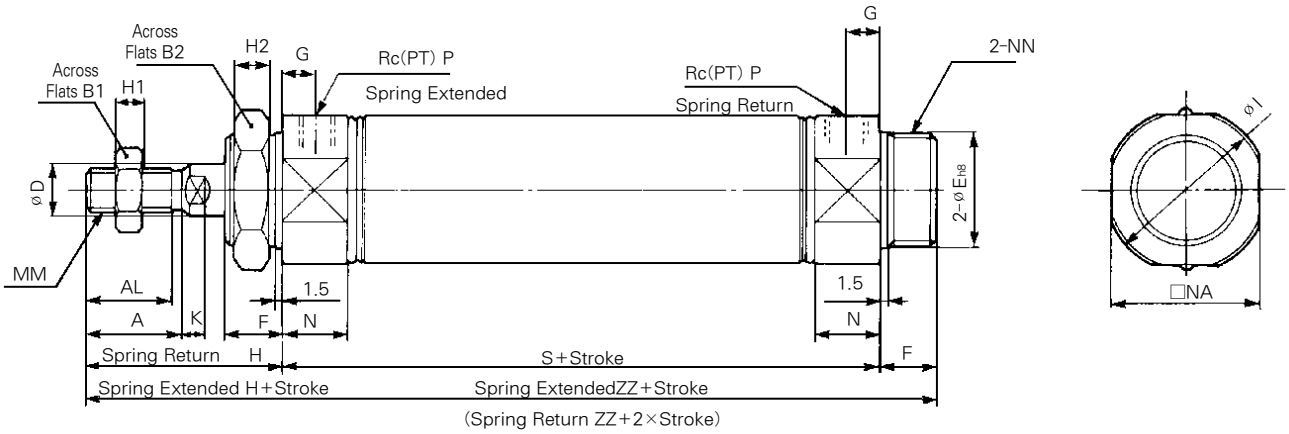

Boss-Cut Type

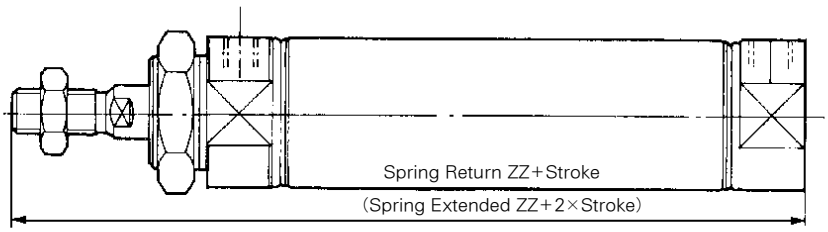

※ This Drawing is Spring Extended.

(Unit : mm)

Bore Size	A	AL	B_1	B_2	D	E	F	G	H	H_1	H_2	I	K	MM	N	NA	NN	P
ø20	18	15.5	13	26	8	$20^{0}_{-0.033}$	13	8	41	5	8	27	5	M8×1.25	15	24	M20×1.5	1/8
ø25	22	19.5	17	32	10	$26^{0}_{-0.033}$	13	8	45	6	8	33	5.5	M10×1.25	15	30	M26×1.5	1/8
ø32	22	19.5	17	32	12	$26^{0}_{-0.033}$	13	8	45	6	8	37.5	5.5	M10×1.25	15	34.5	M26×1.5	1/8
ø40	24	21	22	41	14	$32^{0}_{-0.039}$	16	11	50	8	10	46.5	7	M4×1.5	21.5	42.5	M32×2	1/4

Stroke Dimension Adder

(Unit : mm)

Bore Size \ Stroke / Symbol	1~50		51~100		101~150		151~200		201~250	
	S	ZZ	S	ZZ	S	ZZ	S	ZZ	S	ZZ
ø20	87	141	112	166	137	191	–	–	–	–
ø25	87	145	112	170	137	195	–	–	–	–
ø32	89	147	114	172	139	197	164	222	–	–
ø40	113	179	138	204	163	229	188	254	213	279

Boss-Cut Type

(Unit : mm)

Bore Size \ Stroke / Symbol	1~50	51~100	101~150	151~200	201~250
	ZZ	ZZ	ZZ	ZZ	ZZ
ø20	128	153	178	–	–
ø25	132	157	182	–	–
ø32	134	159	184	209	–
ø40	163	188	213	238	263

Axial Foot Type (L)

AXSL (Bore Size)—(Stroke) S/T

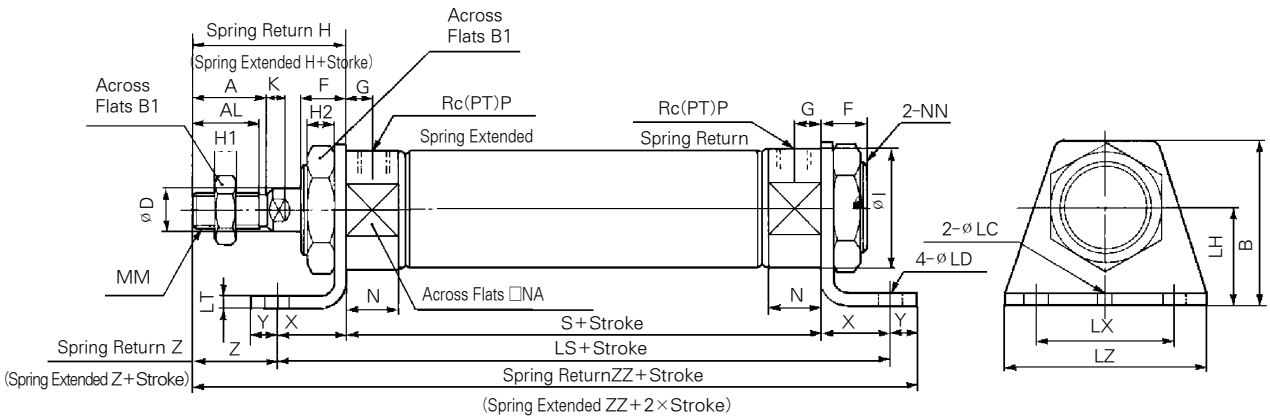

※ This Drawing is Spring Extended

(Unit : mm)

Bore Size	A	AL	B	B_1	B_2	D	F	G	H	H_1	H_2	I	K	LC	LD	LH	LT	LX	LZ	MM	N	NA	NN	P	X	Y	Z
ø20	18	15.5	40	13	26	8	13	8	41	5	8	27	5	4	6.8	25	3.2	40	55	M20×1.25	15	24	M20×1.5	1/8	20	8	21
ø25	22	19.5	47	17	32	10	13	8	45	6	8	33	5.5	4	6.8	28	3.2	40	55	M20×1.25	15	30	M20×1.5	1/8	20	8	25
ø32	22	19.5	47	17	32	12	13	8	45	6	8	37.5	5.5	4	6.8	28	3.2	40	55	M20×1.25	15	34.5	M20×1.5	1/8	20	8	25
ø40	24	21	54	22	41	14	16	11	50	8	10	46.5	7	4	7	30	3.2	55	75	M20×1.25	21.5	42.5	M20×1.5	1/8	23	8	25

Stroke Dimension Adder

(Unit : mm)

Bore size \ Stroke / Symbol	1~50			51~100			101~150			151~200			201~250		
	S	LS	ZZ	S	LS	ZZ	S	LS	ZZ	S	LS	ZZ	S	LS	ZZ
ø20	87	127	156	112	152	181	137	177	206	–	–	–	–	–	–
ø25	87	127	160	112	152	185	137	177	210	–	–	–	–	–	–
ø32	89	129	162	114	154	187	139	179	212	164	204	237	–	–	–
ø40	113	159	196	138	184	221	163	209	246	188	234	271	213	259	296

Rod Side Flange Type(F)

AXSF (Bore Size)—(Stroke) S/T

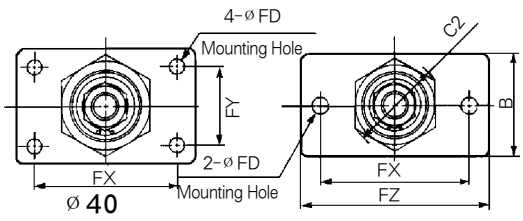

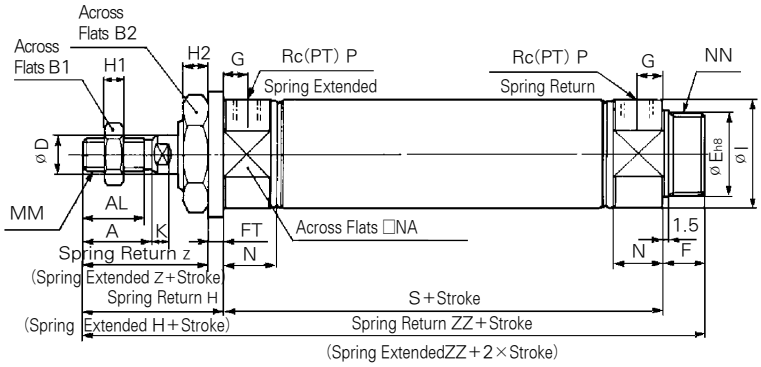

Boss-Cut Type

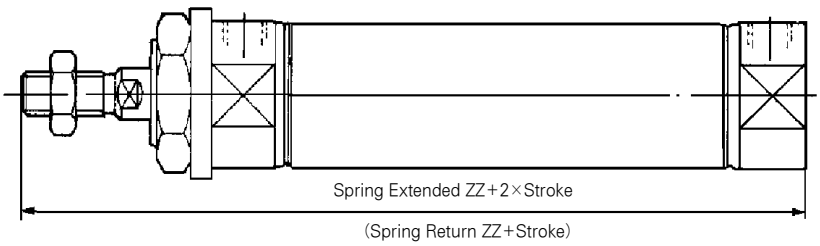

※ This drawing is spring extended

(Unit : mm)

Bore Size	A	AL	B	B^1	B^2	C^2	D	E	F	FD	FT	FX	FY	FZ	G	H	H^1	H^2	I	K	MM	N	NA	NN	P	Z
ø 20	18	15.5	34	13	26	30	8	$20^{0}_{-0.033}$	13	7	4	60	–	75	8	41	5	8	27	5	M8×1.25	15	24	M20×1.5	1/8	37
ø 25	22	19.5	40	17	32	37	10	$26^{0}_{-0.033}$	13	7	4	60	–	75	8	45	6	8	33	5.5	M10×1.25	15	30	M26×1.5	1/8	41
ø 32	22	19.5	40	17	32	37	12	$26^{0}_{-0.033}$	13	7	4	60	–	75	8	45	6	8	37.5	5.5	M10×1.25	15	34.5	M26×1.5	1/8	41
ø 40	24	21	52	22	41	47.3	14	$32^{0}_{-0.039}$	16	7	5	66	36	82	11	50	8	10	46.5	7	M14×1.5	21.5	42.5	M32×2	1/4	45

Stroke Dimension Adder

Bore size \ Stroke / Symbol	1~50		51~100		101~150		151~200		201~250	
	S	ZZ	S	ZZ	S	ZZ	S	ZZ	S	ZZ
ø 20	87	141	112	166	137	191	–	–	–	–
ø 25	87	145	112	170	137	195	–		–	–
ø 32	89	147	114	172	139	197	164	222	–	–
ø 40	113	179	138	204	163	229	188	254	213	279

Boss-Cut Type

Bore size \ Stroke / Symbol	1~50	51~100	101~150	151~200	201~250
	ZZ	ZZ	ZZ	ZZ	ZZ
ø 20	128	153	178	–	–
ø 25	132	157	182	–	–
ø 32	134	159	184	209	–
ø 40	163	188	213	238	263

Head Side Flange Type(G)

AXSG (Bore Size) — (Stroke) S/T

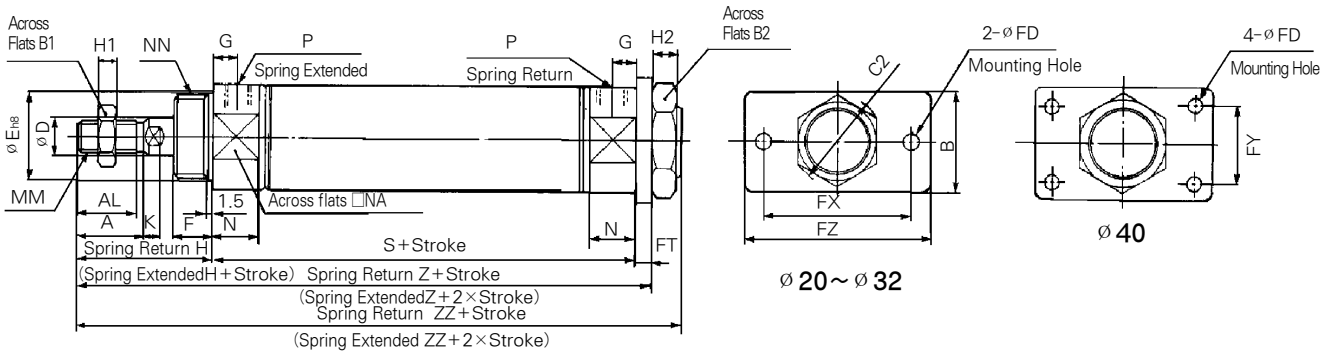

※This Drawing is Spring Extended. (Unit : mm)

Bore Size	A	AL	B	B_1	B_2	C_2	D	E	F	FD	FT	FX	FY	FZ	G	H	H_1	H_2	I	K	MM	N	NA	NN	P	Z
ø 20	18	15.5	34	13	26	30	8	$20^{0}_{-0.033}$	13	7	4	60	–	75	8	41	5	8	27	5	M8×1.25	15	24	M20×1.5	1/8	37
ø 25	22	19.5	40	17	32	37	10	$26^{0}_{-0.033}$	13	7	4	60	–	75	8	45	6	8	33	5.5	M10×1.25	15	30	M26×1.5	1/8	41
ø 32	22	19.5	40	17	32	37	12	$26^{0}_{-0.033}$	13	7	4	60	–	75	8	45	6	8	37.5	5.5	M10×1.25	15	34.5	M26×1.5	1/8	41
ø 40	24	21	52	22	41	47.3	14	$32^{0}_{-0.039}$	16	7	5	66	36	82	11	50	8	10	46.5	7	M14×1.5	21.5	42.5	M32×2	1/4	45

Stroke Dimension Adder

Bore size \ Stroke / Symbol	1～50			51～100			101～150			151～200			201～250		
	S	Z	ZZ	S	Z	ZZ	S	Z	ZZ	S	Z	ZZ	S	Z	ZZ
ø 20	87	132	141	112	157	166	137	182	191	–	–	–	–	–	–
ø 25	87	136	145	112	161	170	137	186	195	–	–	–	–	–	–
ø 32	89	138	147	114	163	172	139	188	197	164	213	222	–	–	–
ø 40	113	168	179	138	193	204	163	218	229	188	243	254	213	268	279

Single Clevis Type(C)

AXSC (Bore Size)—(Stroke) S/T

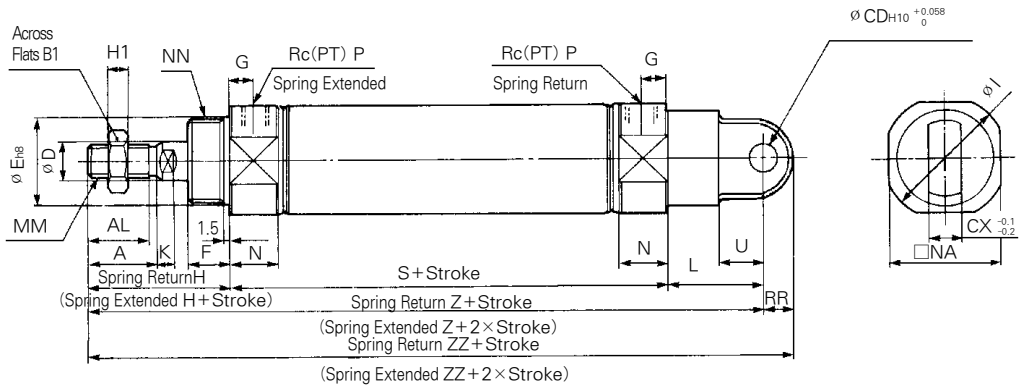

※ This Drawing is Spring Extended (Unit : mm)

Bore Size	A	AL	B_1	CD	CX	D	E	F	G	H	H_1	I	K	L	MM	N	NA	NN	P	RR	U
ø20	18	15.5	13	9	10	8	$20^{0}_{-0.033}$	13	8	41	5	27	5	30	M8×1.25	15	24	M20×1.5	1/8	9	14
ø25	22	19.5	17	9	10	10	$26^{0}_{-0.033}$	13	8	45	6	33	5.5	30	M10×1.25	15	30	M26×1.5	1/8	9	14
ø32	22	19.5	17	9	10	12	$26^{0}_{-0.033}$	13	8	45	6	37.5	5.5	30	M10×1.25	15	34.5	M26×1.5	1/8	9	14
ø40	24	21	22	10	15	14	$32^{0}_{-0.039}$	16	11	50	8	46.5	7	39	M14×1.5	21.5	42.5	M32×2	1/4	11	18

Stroke Dimension Adder

Bore size \ Stroke / Symbol	1~50			51~100			101~150			151~200			201~250		
	S	Z	ZZ	S	Z	ZZ	S	Z	ZZ	S	Z	ZZ	S	Z	ZZ
ø20	87	158	167	112	183	192	137	208	217	–	–	–	–	–	–
ø25	87	162	171	112	187	196	137	212	221	–	–	–	–	–	–
ø32	89	164	173	114	189	198	139	214	223	164	239	248	–	–	–
ø40	113	202	213	138	227	238	163	252	263	188	277	288	213	302	313

Double Clevis Type(D)

AXSD (Bore Size)—(Stroke) S/T

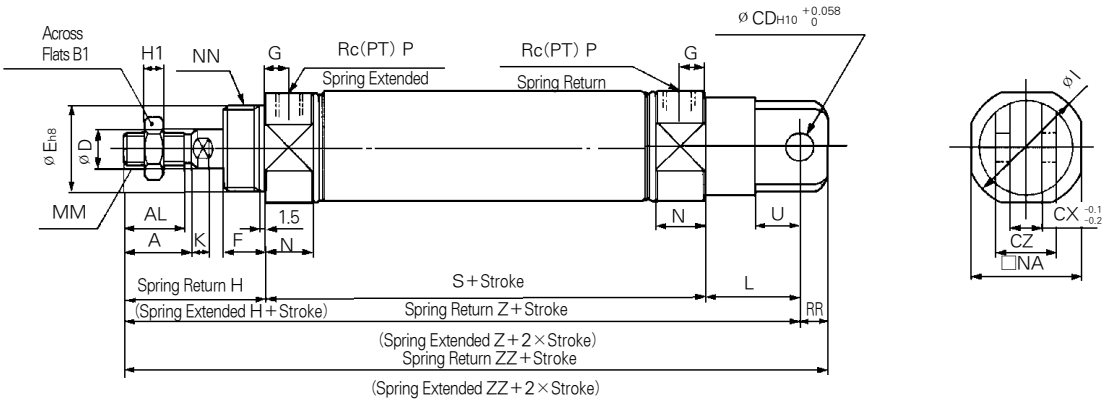

※ This Drawing is Spring Extemded

(Unit : mm)

Bore Size	A	AL	B_1	CD	CX	CZ	D	E	F	G	H	H_1	I	K	L	MM	N	NA	NN	P	RR	U
Ø20	18	15.5	13	9	10	19	8	$20^{0}_{-0.033}$	13	8	41	5	27	5	30	M8×1.25	15	24	M20×1.5	1/8	9	14
Ø25	22	19.5	17	9	10	19	10	$26^{0}_{-0.033}$	13	8	45	6	33	5.5	30	M10×1.25	15	30	M26×1.5	1/8	9	14
Ø32	22	19.5	17	9	10	19	12	$26^{0}_{-0.033}$	13	8	45	6	37.5	5.5	30	M10×1.25	15	34.5	M25×1.5	1/8	9	14
Ø40	24	21	22	10	15	30	14	$32^{0}_{-0.039}$	16	11	50	8	46.5	7	39	M14×1.5	21.5	42.5	M32×2	1/4	11	18

Stroke Dimension Adder

Bore size \ Stroke / Symbol	1~50			51~100			101~150			151~200			201~250		
	S	Z	ZZ	S	Z	ZZ	S	Z	ZZ	S	Z	ZZ	S	Z	ZZ
Ø20	87	158	167	112	183	192	137	208	217	–	–	–	–	–	–
Ø25	87	162	171	112	187	196	137	212	221	–	–	–	–	–	–
Ø32	89	164	173	114	189	198	139	214	223	164	239	248	–	–	–
Ø40	113	202	213	138	227	238	163	252	263	188	277	288	213	302	313

Rod Side Trunnion Type(U)

AXSU (Bore Size) — (Stroke) S/T

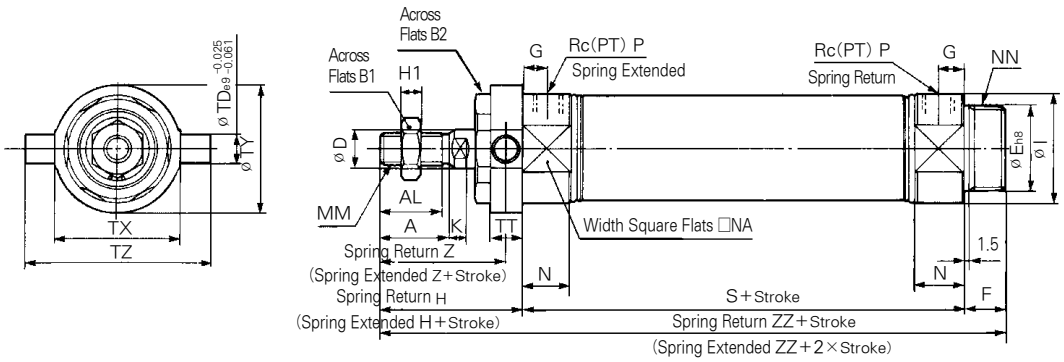

Boss-Cut Type

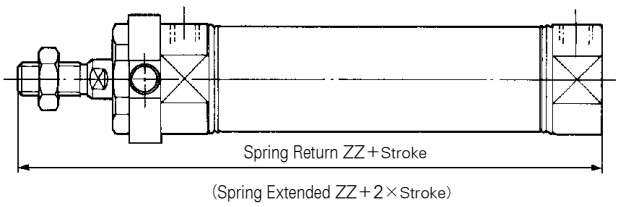

※This drawing spring extended

(Unit : mm)

Bore size	A	AL	B_1	B_2	D	E	F	G	H	H_1	I	K	MM	N	NA	NN	P	TD	TT	TX	TY	TZ	Z
ø20	18	15.5	13	26	8	$20^{0}_{-0.033}$	13	8	41	5	27	5	M8×1.25	15	24	M20×1.5	1/8	8	10	32	32	52	36
ø25	22	19.5	17	32	10	$26^{0}_{-0.033}$	13	8	45	6	33	5.5	M10×1.25	15	30	M26×1.5	1/8	9	10	40	40	60	40
ø32	22	19.5	17	32	12	$26^{0}_{-0.033}$	13	8	45	6	37.5	5.5	M10×1.25	15	34.5	M26×1.5	1/8	9	10	40	40	60	40
ø40	24	21	22	41	14	$32^{0}_{-0.039}$	16	11	50	8	46.5	7	M14×1.5	21.5	42.5	M32×2	1/4	10	11	53	53	77	44.5

Stroke Dimension Adder

Bore size \ Stroke / Symbol	1~50		51~100		101~200		151~200		201~250	
	S	ZZ	S	ZZ	S	ZZ	S	ZZ	S	ZZ
ø20	87	141	112	166	137	191	–	–	–	–
ø25	87	145	112	170	137	195	–		–	–
ø32	89	147	114	172	139	197	164	222	–	–
ø40	113	179	138	204	163	229	188	254	213	279

Boss-Cut Type

Bore size \ Stroke / Symbol	1~50	51~100	101~150	151~200	201~250
	ZZ	ZZ	ZZ	ZZ	ZZ
ø20	128	153	178	–	–
ø25	132	157	182	–	–
ø32	134	159	184	209	–
ø40	163	188	213	238	263

Integrated Clevis Type(E)

AXSE (Bore Size) — (Stroke) S/T

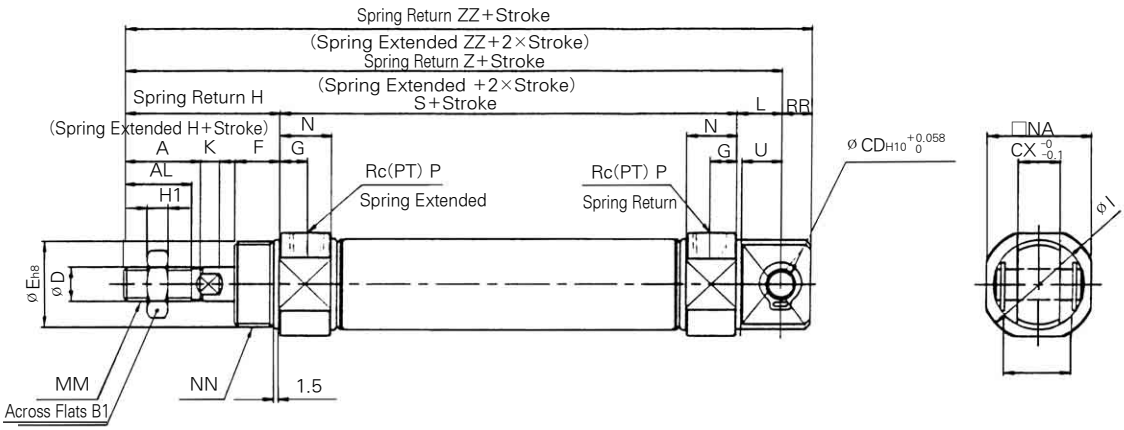

※ This drawing is spring extended.

(Unit : mm)

Bore Size	A	AL	B_1	CD	CX	D	E	F	G	H	H_1	I	K	L	LV	MM	N	NA	NN	P	RR	U
ø20	18	15.5	13	8	12	8	$20^{0}_{-0.033}$	13	8	41	5	27	5	12	18.4	M8×1.25	15	24	M20×1.5	1/8	9	11.5
ø25	22	19.5	17	8	12	10	$26^{0}_{-0.033}$	13	8	45	6	33	5.5	12	18.4	M10×1.25	15	30	M26×1.5	1/8	9	11.5
ø32	22	19.5	17	10	20	12	$26^{0}_{-0.033}$	13	8	45	6	37.5	5.5	15	28	M10×1.25	15	34.5	M26×1.5	1/8	12	14.5
ø40	24	21	22	10	20	14	$32^{0}_{-0.039}$	16	11	50	8	46.5	7	15	28	M14×1.5	21.5	42.5	M32×2	1/4	12	14.5

Stroke Dimension Adder

(Unit : mm)

Bore size \ Stroke / Symbol	1~50			51~100			101~150			151~200			201~250		
	S	Z	ZZ	S	Z	ZZ	S	Z	ZZ	S	Z	ZZ	S	Z	ZZ
ø20	87	140	149	112	165	174	137	190	199	–	–	–	–	–	–
ø25	87	144	153	112	169	178	137	194	203	–	–	–	–	–	–
ø32	89	149	161	114	174	186	139	199	211	164	224	236	–	–	–
ø40	113	178	190	138	203	215	163	228	240	188	253	265	213	278	290

Head Side Trunnion Type(T)

AXST (Bore Size) — (Stroke) S/T

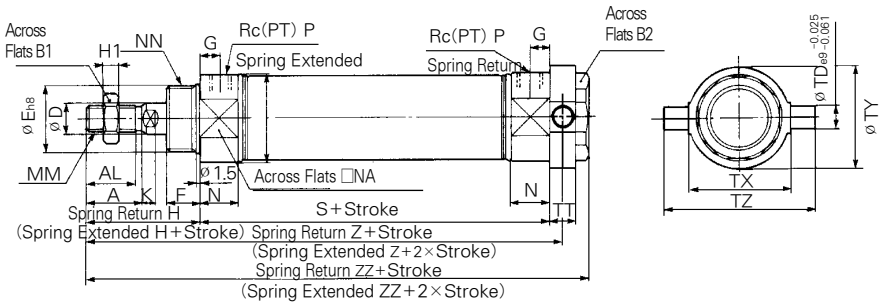

※ This Drawing is Spring Extended (Unit : mm)

Bore Size	A	AL	B1	B2	D	E_{h8}	F	G	H	H_1	I	K	MM	N	NA	NN	P	TD	TT	TX	TY	TZ
ø20	18	15.5	13	26	8	$20^{0}_{-0.033}$	13	8	41	5	27	5	M8×1.25	15	24	M20×1.5	1/8	8	10	32	32	52
ø25	22	19.5	17	32	10	$26^{0}_{-0.033}$	13	8	45	6	33	5.5	M10×1.25	15	30	M26×1.5	1/8	9	10	40	40	60
ø32	22	19.5	17	32	12	$26^{0}_{-0.033}$	13	8	45	6	37.5	5.5	M10×1.25	15	34.5	M26×1.5	1/8	9	10	40	40	60
ø40	24	21	22	41	14	$32^{0}_{-0.039}$	16	11	50	8	46.5	7	M14×1.5	21.5	42.5	M32×2	1/4	10	11	53	53	77

Stroke / Symbol / Bore size	1~50			51~100			101~150			151~200			201~250		
	S	Z	ZZ	S	Z	ZZ	S	Z	ZZ	S	Z	ZZ	S	Z	ZZ
ø20	87	133	143	112	158	168	137	183	193	–	–	–	–	–	–
ø25	87	137	147	112	162	172	137	187	197	–	–	–	–	–	–
ø32	89	139	149	114	164	174	139	189	199	164	214	224	–	–	–
ø40	113	168.5	179	138	193.5	204	163	218.5	229	188	243.5	254	213	268.5	279

Reed Switch Setting Position (Stroke End)

W5

(Unit : mm)

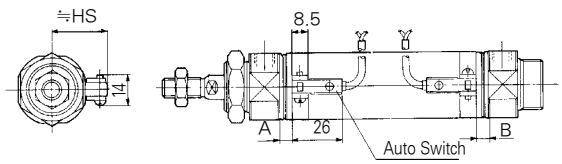

Auto Switch Mounting, Minimum Possible Cylinder Stroke

Auto Switch Type	No. of auto switch				1pc
	2pcs.		npcs.		
	Different Surface	Same Surface	Different Surface	Same Surface	
W5	15	50	$15+45(\frac{n-2}{2})$ (n=2,4,6,8 ···)	50+45(n-2)	10

Auto switch setting position(Stroke end)

(Unit : mm)

Auto Switch Type	Bore Size	Spring Return						Spring Extended						Hs
		A					B	A	B					
		~50ST	51~100ST	101~150ST	151~200ST	201 ~250ST			~50ST	51~100ST	101~150ST	151~200ST	201 ~250ST	
W5	ø20	32	57	82	107	132	6	7	31	56	81	106	131	22.5
	ø25	32	57	82	107	132	6	7	31	56	81	106	131	25
	ø32	33	58	83	108	133	7	8	32	57	82	107	132	28.5
	ø40	38	63	88	113	138	12	13	37	62	87	112	137	32.5

Series AXK

Non-Rotating Piston Rod Type/Double Acting:Single Rod

Bore Size(mm) : ø20, ø25, ø32, ø40

- NUMBEROUS MOUNTING OPTION
- MAGENT STANDARD FOR AUTO SWITCH
- BUMPERS STNADARD
- DESIGED FOR NON-LUBRICATED SERVICE
- COMPACT LIGHT DESIGN
- REPLACEABLE ROD GLAND
- CUSTOM DESIGNED PISTON ROD FOR NON-ROTATION
- MANUFACTURING CERTIFIED TO ISO 9001 / 9002

Symbol

Double Acting/Single Rod

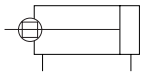

How to Order

AXK (1) L (2) 40 (3) – 150 (4) J (5) – ○ (6) – W5 (7) ○ (8)

1 Non-Rotating Piston Rod Type

2 Mounting
- B : Basic Type
- L : Axial Foot Type
- F : Rod Side Flange Type
- G : Head Side Flange Type
- C : Single Clevis Type
- D : Double Clevis Type
- T : Head Side Trunnion Type
- U : Rod Side Trunnion Type
- E : Integrated Clevis Type
- BZ : Boss-Cut Basic Type
- FZ : Boss-Cut Flange Type
- UZ : Boss-Cut Trunnion Type

3 Bore size(mm)
- 20 : ø20
- 25 : ø25
- 32 : ø32
- 40 : ø40

4 Stroke (mm)
※ For Stroke Refer to Page 64.

5 Rod Boot Option
- Blank : Without Boot
- J : Nylon Tarpaulin
- K : Neoprene Cloth

6 Special Option
- Blank : Standard type
- XC16 : Copper-free

7 Applicable Auto Switch Reed Switch
(Band mounted type)
(Grommet)
- Blank : Without auto switch
- W5 : W5

Standard Lead 0.5m
(Up to 3m Optional)

8 Number of Switches
- Blank : 2 pcs.
- S : 1 pc.
- N : (n) pcs.

PART No. of Mounting Bracket

Bore size(mm)	ø20	ø25	ø32	ø40
※Axial foot	TCM-L020B	TCM-L032B		TCM-L040B
Flange	TCM-F020B	TCM-F032B		TCM-F040B
Single clevis	TCM-C020B	TCM-C032B		TCM-C040B
Double clevis	TCM-D020B	TCM-D032B		TCM-D040B
Trunnion(With nut)	TCM-T020B	TCM-T032B		TCM-T040B

※ 2 pcs. Required Per Cylinder

PART No. of Auto Switch Mounting Band

Auto Switch Model	Bore size(mm)			
	ø20	ø25	ø32	ø40
W5	TBM2-020	TBM2-025	TBM2-032	TBM2-040

Model

Bore Size(mm)	Ø20	Ø25	Ø32	Ø40
Action	Double Acting Single Rod			
Cushion	Rubber Cushion (Standard)			
Piping Method	Rc(PT)1/8	Rc(PT)1/8	Rc(PT)1/8	Rc(PT)1/4

Specifications

Action		Double Acting Single Rod
Fluid		Air
Proof pressure		15kgf/cm² (1.5 MPa)
Max. Operating Pressure		9.9kgf/cm² (1.0 MPa)
Min. Operating Pressure		0.5kgf/cm² (0.05 MPa)
Ambient and Fluid Temperature		40~140°F (5~ 60℃)
Lubrication		None (Non-Lube)
Stroke Tolerance		$^{+1.4}_{0}$ mm
Mounting		Basic Type, Axial Foot Type, Rod Side Flange Type, Head Side Flange Type, Single Clevis Type, Head Side Trunnion Type, Rod Side Trunnion Type, Integrated Clevis, Type Boss-Cut Type
Non-Rotating Accuracy	Ø20, Ø25	±0.8°
	Ø32, Ø40	±0.5°

Piston Speed

Bore Size(mm)	Ø20	Ø25	Ø32	Ø40
Piston Speed(mm/sec)	50 ~ 500			
Allowable Kinetic Energy(kgf/cm)	2.7	4	6.5	12

Auto Switch Specifications

Mounting	Lead Wire Entry	Reed Switch
Band Mounting Type	Grommet	W5

Standard stroke(mm)

Bore size(mm)	Standard stroke
Ø20	25, 50, 75, 100, 125, 150
Ø25	25, 50, 75, 100, 125, 150, 200
Ø32	25, 50, 75, 100, 125, 150, 200
Ø40	25, 50, 75, 100, 125, 150, 200, 250, 300

Material of Boot

Symbol	Material of Boot	Max. Ambient Temperature
J	Nylon Tarpaulin	140°F (60℃)
K	Neoprene Cloth	※230°F (110℃)

※ The max. ambient temperature of gaiters only.

Boss-cut Type

Boss for the head cover bracket is eliminated and the total length of the cylinder is shortened.

Compared to the total length of cylinder (mm)

ø20	ø25	ø32	ø40
▲13	▲13	▲13	▲13

Mounting : ■ Boss-Cut Basic Type(BZ) ■ Boss-Cut Flange Type(FZ)
■ Boss-Cut Trunnion Type(UZ)

Mounting and Accessories

Mounting \ Accessories	Standard			Option		
	Mounting Nut	Rod End Nut	Clevis Pin	Knuckle Joint	Double Knuckle Joint	Boot
Basic Type	●(1pc.)	●	–	●	●	●
Axial Foot Type	●(2)	●	–	●	●	●
Rod Side Flange Type	●(1)	●	–	●	●	●
Head Side Flange Type	●(1)	●	–	●	●	●
Intergrated Clevis Type	–	●	–	●	●	●
Single Clevis Type	–	●	–	●	●	●
Double Clevis Type	–	●	●	●	●	●
Head Side Trunnion Type	●(1)	●	–	●	●	●
Rod Side Trunnion Type	●(1)	●	–	●	●	●
Boss-Cut Basic Type	●(1)	●	–	●	●	●
Boss-Cut Flange Type	●(1)	●	–	●	●	●
Boss-Cut Trunnion Type	●(1)	●	–	●	●	●
Note					With pin	

Weight Table

(kgf)

Bore Size(mm)		ø20	ø25	ø32	ø40
Basic weight	Basic Type	0.14	0.21	0.28	0.57
Mornting Bracket Weight	Axial Foot Type	0.29	0.37	0.44	0.84
	Flange Type	0.20	0.30	0.37	0.69
	Integrated Clevis Type	0.12	0.19	0.27	0.53
	Single Clevis Type	0.18	0.25	0.32	0.66
	Double Clevis Type	0.19	0.27	0.33	0.70
	Trunnion Type	0.18	0.28	0.34	0.67
	Boss-Cut Basic Type	0.13	0.19	0.26	0.54
	Boss-Cut Flange Type	0.19	0.28	0.35	0.66
	Boss-Cut Trunnion Type	0.17	0.26	0.32	0.64
Additional weight for each 50 mm of stroke		0.14	0.07	0.09	0.14
Accessories Weight	Single Knuckle joint	0.06	0.06	0.06	0.23
	Double Knuckle Joint (with pin)	0.07	0.07	0.07	0.20

Calculation Example

AXKL 32-100
- Basic weight : 0.44(Foot type ø32)
- Additional weight : 0.09/50 stroke
- Cylinder stroke : 100 stroke

0.44+0.09×100/50=0.62kgf

Basic Type(B)

AXKB (Bore Size) — (Stroke) ◯

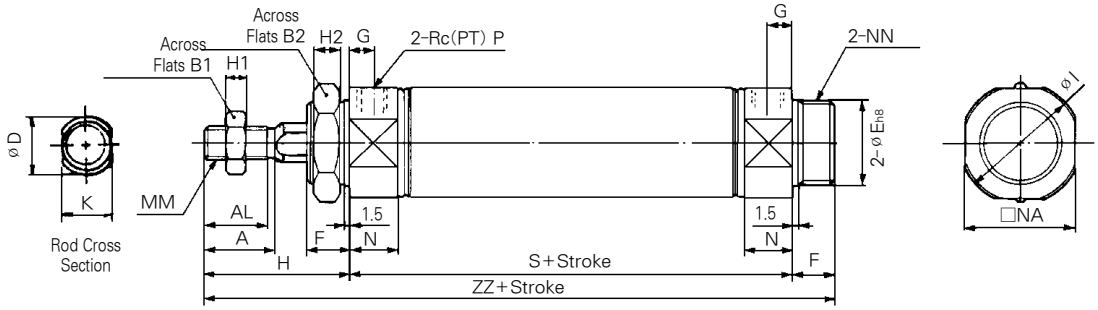

Boss-cut type

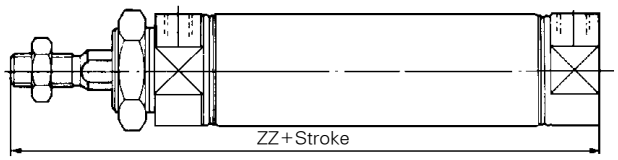

With Rod Boot

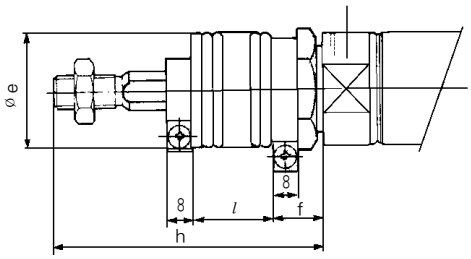

(mm)

Bore Size	A	AL	B_1	B_2	D	E	F	G	H	H_1	H_2	I	K	MM	N	NA	NN	P	S	ZZ
ø**20**	18	15.5	13	26	$10^{-0.01}_{-0.05}$	$20^{0}_{-0.033}$	13	8	41	5	8	27	$8^{-0.01}_{-0.05}$	M8×1.25	15	24	M20×1.5	1/8	62	116
ø**25**	22	19.5	17	32	$10^{-0.01}_{-0.05}$	$26^{0}_{-0.033}$	13	8	45	6	8	33	$8^{-0.01}_{-0.05}$	M8×1.25	15	30	M26×1.5	1/8	62	120
ø**32**	22	19.5	17	32	$12^{-0.01}_{-0.05}$	$26^{0}_{-0.033}$	13	8	45	6	8	37.5	$10^{-0.01}_{-0.05}$	M10×1.25	15	34.5	M26×1.5	1/8	64	122
ø**40**	24	21	22	41	$16^{-0.01}_{-0.05}$	$32^{0}_{-0.039}$	16	11	50	8	10	46.5	$14^{-0.01}_{-0.05}$	M14×1.5	21.5	42.5	M32×2	1/4	88	154

With Rod Boot

(mm)

Bore Size	e	f	h					l				
			1~50st	51~100st	101~150st	151~200st	201~300st	1~50st	51~100st	101~150st	151~200st	201~300st
ø**20**	30	16	68	81	93	106	131	12.5	25	37.5	50	75
ø**25**	30	16	72	85	97	110	135	12.5	25	37.5	50	75
ø**32**	30	16	72	85	97	110	135	12.5	25	37.5	50	75
ø**40**	40	18	77	90	102	115	140	12.5	25	37.5	50	75

Boss-Cut Type

Bore Size	ZZ
ø**20**	103
ø**25**	107
ø**32**	109
ø**40**	138

Axial Foot Type(L)

AXKL Bore Size — Stroke

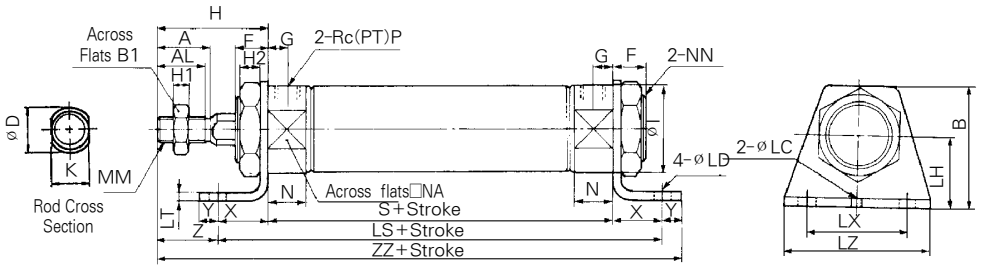

(mm)

Bore Size	A	AL	B	B_1	B_2	D	F	G	H	H_1	H_2	I	K	LC	LD	LH	LS	LT	LX	LZ	MM	N	NA	NN	P	S	X	Y	Z	ZZ
ø20	18	15.5	40	13	26	$10^{-0.01}_{-0.05}$	13	8	41	5	8	27	$8^{-0.01}_{-0.05}$	4	6.8	25	102	3.2	40	55	M8×1.25	15	24	M20×1.5	1/8	62	20	8	21	131
ø25	22	19.5	47	17	32	$10^{-0.01}_{-0.05}$	13	8	45	6	8	33	$8^{-0.01}_{-0.05}$	4	6.8	28	102	3.2	40	55	M8×1.25	15	30	M26×1.5	1/8	62	20	8	25	135
ø32	22	19.5	47	17	32	$12^{-0.01}_{-0.05}$	13	8	45	6	8	37.5	$10^{-0.01}_{-0.05}$	4	6.8	28	104	3.2	40	55	M10×1.25	15	34.5	M26×1.5	1/8	64	20	8	25	137
ø40	24	21	54	22	41	$16^{-0.01}_{-0.05}$	16	11	50	8	10	46.5	$14^{-0.01}_{-0.05}$	4	7	30	134	3.2	55	75	M14×1.5	21.5	42.5	M32×2	1/4	88	23	10	27	171

Rod Side Flange Type(F)

AXKF Bore Size — Stroke

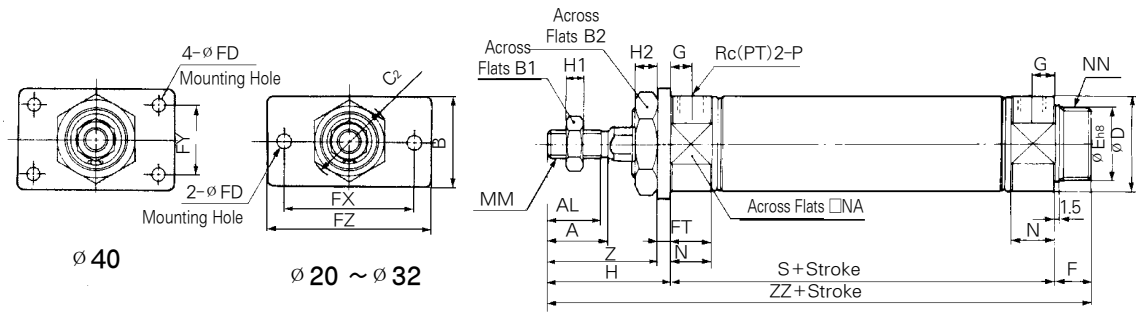

(mm)

Bore Size	A	AL	B	B_1	B_2	C_2	D	E	F	FD	FT	FX	FY	FZ	G	H	H_1	H_2	I	K	MM
ø20	18	15.5	34	13	26	30	$10^{-0.01}_{-0.05}$	$20^{0}_{-0.033}$	13	7	4	60	—	75	8	41	5	8	27	$8^{-0.01}_{-0.05}$	M8×1.25
ø25	22	19.5	40	17	32	37	$10^{-0.01}_{-0.05}$	$26^{0}_{-0.033}$	13	7	4	60	—	75	8	45	6	8	33	$8^{-0.01}_{-0.05}$	M8×1.25
ø32	22	19.5	40	17	32	37	$12^{-0.01}_{-0.05}$	$26^{0}_{-0.033}$	13	7	4	60	—	75	8	45	6	8	37.5	$10^{-0.01}_{-0.05}$	M10×1.25
ø40	24	21	52	22	41	47.3	$16^{-0.01}_{-0.05}$	$32^{0}_{-0.039}$	16	7	5	66	36	82	11	50	8	10	46.5	$14^{-0.01}_{-0.05}$	M14×1.5

(mm)

Bore Size	N	NA	NN	P	S	Z	ZZ
ø20	15	24	M20×1.5	1/8	62	37	116
ø25	15	30	M26×1.5	1/8	62	41	120
ø32	15	34.5	M26×1.5	1/8	64	41	122
ø40	21.5	42.5	M32×2	1/4	88	45	154

Boss-Cut Type

Bore Size	ZZ
ø20	103
ø25	107
ø32	109
ø40	138

Boss-cut type

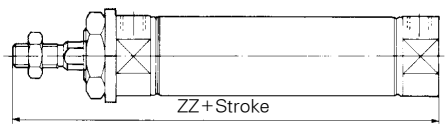

Head Side Flange Type(G)

AXKG (Bore Size) — (Stroke) ◯

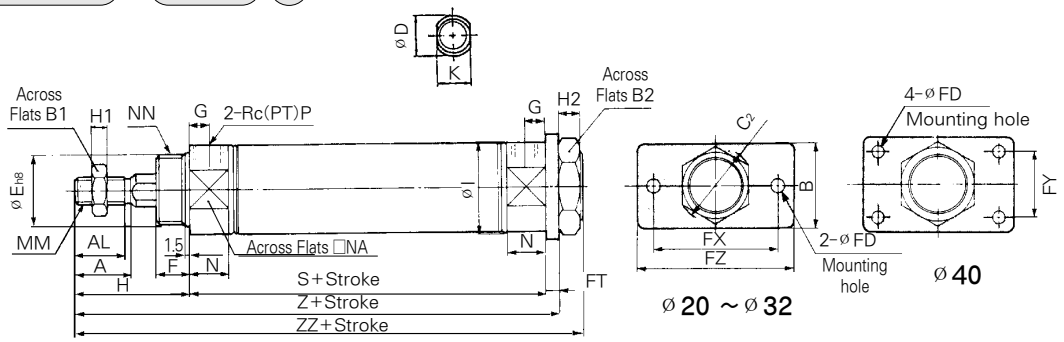

(mm)

Bore Size	A	AL	B	B_1	B_2	C_2	D	E	F	FD	FT	FX	FY	FZ	G	H	H_1	H_2	I	K	MM
ø20	18	15.5	34	13	26	30	$10^{-0.01}_{-0.05}$	$20^{0}_{-0.033}$	13	7	4	60	–	75	8	41	5	8	27	$8^{-0.01}_{-0.05}$	M8×1.25
ø25	22	19.5	40	17	32	37	$10^{-0.01}_{-0.05}$	$26^{0}_{-0.033}$	13	7	4	60	–	75	8	45	6	8	33	$8^{-0.01}_{-0.05}$	M8×1.25
ø32	22	19.5	40	17	32	37	$12^{-0.01}_{-0.05}$	$26^{0}_{-0.033}$	13	7	4	60	–	75	8	45	6	8	37.5	$10^{-0.01}_{-0.05}$	M10×1.25
ø40	24	21	52	22	41	47.3	$16^{-0.01}_{-0.05}$	$32^{0}_{-0.039}$	16	7	5	66	36	82	10	50	8	10	46.5	$14^{-0.01}_{-0.05}$	M14×1.5

Bore Size	N	NA	NN	P	S	Z	ZZ
ø20	15	24	M20×1.5	1/8	62	107	116
ø25	15	30	M26×1.5	1/8	62	111	120
ø32	15	34.5	M26×1.5	1/8	64	113	122
ø40	21.5	42.5	M32×2	1/4	88	143	154

Single Clevis Type (C)

AXKC (Bore Size) — (Stroke) ◯

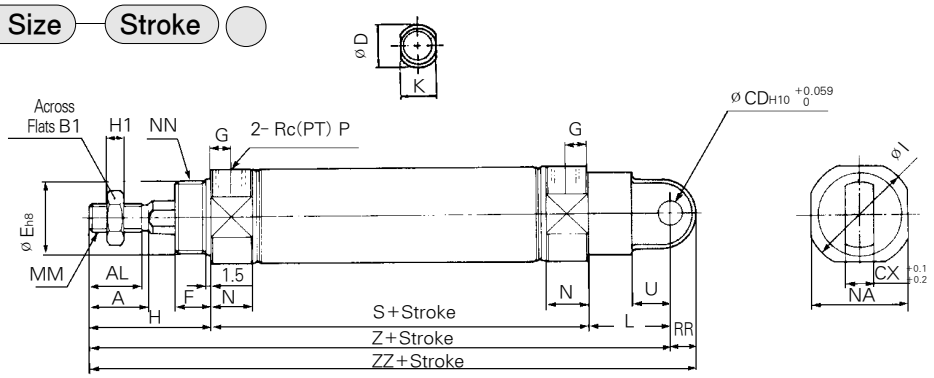

(mm)

Bore Size	A	AL	B_1	CD	CX	D	E	F	G	H	H_1	I	K	L	MM	N	NA	NN	P	RR
ø20	18	15.5	13	9	10	$10^{-0.01}_{-0.05}$	$20^{0}_{-0.033}$	13	8	41	5	27	$8^{-0.01}_{-0.05}$	30	M8×1.25	15	24	M20×1.5	1/8	9
ø25	22	19.5	17	9	10	$10^{-0.01}_{-0.05}$	$26^{0}_{-0.033}$	13	8	45	6	33	$8^{-0.01}_{-0.05}$	30	M8×1.25	15	30	M26×1.5	1/8	9
ø32	22	19.5	17	9	10	$12^{-0.01}_{-0.05}$	$26^{0}_{-0.033}$	13	8	45	6	37.5	$10^{-0.01}_{-0.05}$	30	M10×1.25	15	34.5	M26×1.5	1/8	9
ø40	24	21	22	10	15	$16^{-0.01}_{-0.05}$	$32^{0}_{-0.039}$	16	11	50	8	46.5	$14^{-0.01}_{-0.05}$	39	M14×1.5	21.5	42.5	M32×2	1/4	11

Bore Size	S	U	Z	ZZ
ø20	62	14	133	142
ø25	62	14	137	146
ø32	64	14	139	148
ø40	88	18	177	188

Double Clevis Type(D)

AXKD (Bore Size) — (Stroke) ◯

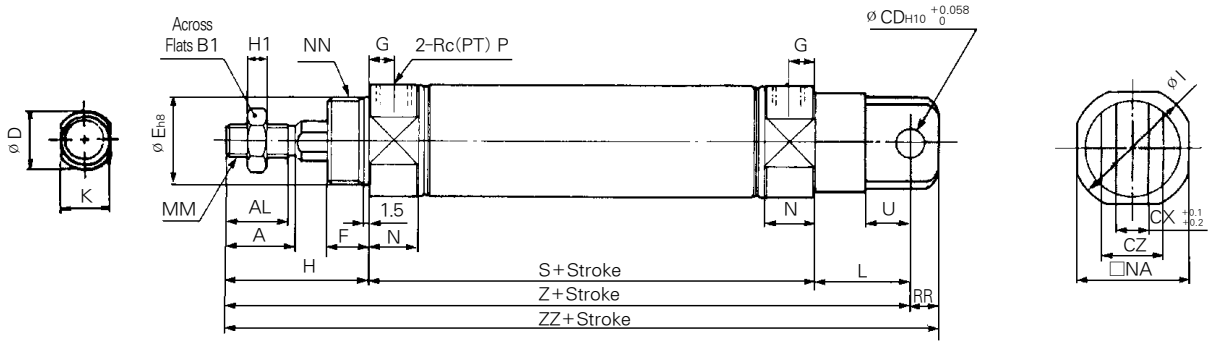

(mm)

Bore Size	A	AL	B1	CD	CX	CZ	D	E	F	G	H	H1	I	K	L	MM	N	NA	NN	P	RR	S	U	Z	ZZ
ø20	18	15.5	13	9	10	19	$10^{-0.01}_{-0.05}$	$20^{0}_{-0.033}$	13	8	41	5	27	$8^{-0.01}_{-0.05}$	30	M8×1.25	15	24	M20×1.5	1/8	9	62	14	133	142
ø25	22	19.5	17	9	10	19	$10^{-0.01}_{-0.05}$	$26^{0}_{-0.033}$	13	8	45	6	33	$8^{-0.01}_{-0.05}$	30	M8×1.25	15	30	M26×1.5	1/8	9	62	14	137	146
ø32	22	19.5	17	9	10	19	$12^{-0.01}_{-0.05}$	$26^{0}_{-0.033}$	13	8	45	6	37.5	$10^{-0.01}_{-0.05}$	30	M10×1.25	15	34.5	M26×1.5	1/8	9	64	14	139	148
ø40	24	21	22	10	15	30	$16^{-0.01}_{-0.05}$	$32^{0}_{-0.039}$	16	11	50	8	46.5	$14^{-0.01}_{-0.05}$	39	M14×1.5	21.5	42.5	M32×2	1/4	11	88	18	177	188

Rod Side Trunnion Type(U)

AXKU (Bore Size) — (Stroke) ◯

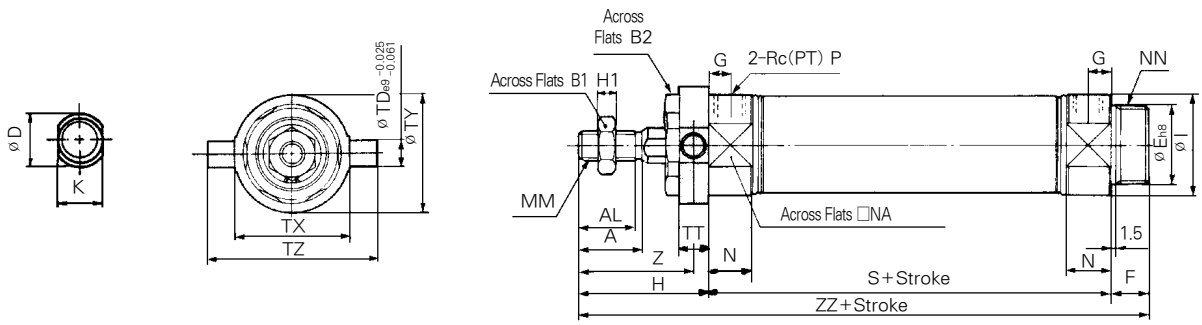

(mm)

Bore Size	A	AL	B1	B2	D	E	F	G	H	H1	I	K	MM	N	NA	NN	P	S	TD	TT
ø20	18	15.5	13	26	$10^{-0.01}_{-0.05}$	$20^{0}_{-0.033}$	13	8	41	5	27	$8^{-0.01}_{-0.05}$	M8×1.25	15	24	M20×1.5	1/8	62	8	10
ø25	22	19.5	17	32	$10^{-0.01}_{-0.05}$	$26^{0}_{-0.033}$	13	8	45	6	33	$8^{-0.01}_{-0.05}$	M8×1.25	15	30	M26×1.5	1/8	62	9	10
ø32	22	19.5	17	32	$12^{-0.01}_{-0.05}$	$26^{0}_{-0.033}$	13	8	45	6	37.5	$10^{-0.01}_{-0.05}$	M10×1.25	15	34.5	M26×1.5	1/8	64	9	10
ø40	24	21	22	41	$16^{-0.01}_{-0.05}$	$32^{0}_{-0.039}$	16	11	50	8	46.5	$14^{-0.01}_{-0.05}$	M14×1.5	21.5	42.5	M32×2	1/4	88	10	11

Bore Size	TX	TY	TZ	Z	ZZ
ø20	32	32	52	36	116
ø25	40	40	60	40	120
ø32	40	40	60	40	122
ø40	53	53	77	44.5	154

Boss-Cut Type

Bore Size	ZZ
ø20	103
ø25	107
ø32	109
ø40	138

Boss-Cut Type

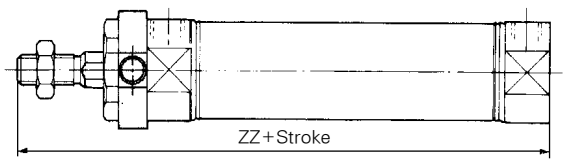

Head Side Trunnion Type(T)

AXKT (Broe size)—(Stroke)(◯)

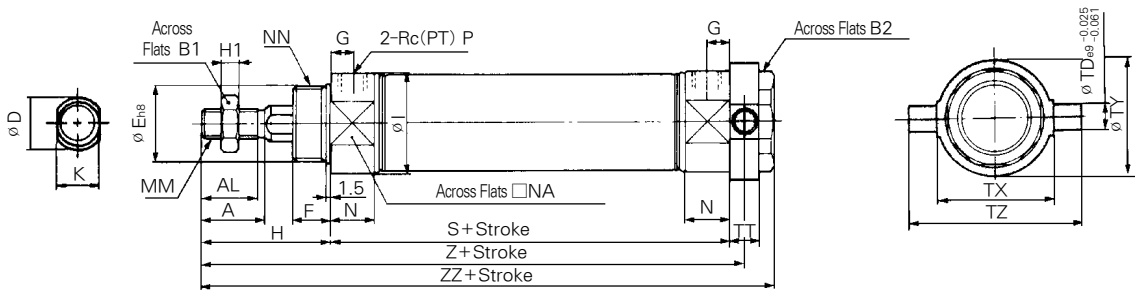

(mm)

Bore Size	A	AL	B_1	B_2	D	E	F	G	H	H_1	I	K	MM	N	NA	NN	P	S	TD	TT
ø20	18	15.5	13	26	$10^{-0.01}_{-0.05}$	$20^{0}_{-0.033}$	13	8	41	5	27	$8^{-0.01}_{-0.05}$	M8×1.25	15	24	M20×1.5	1/8	62	8	10
ø25	22	19.5	17	32	$10^{-0.01}_{-0.05}$	$26^{0}_{-0.033}$	13	8	45	6	33	$8^{-0.01}_{-0.05}$	M8×1.25	15	30	M26×1.5	1/8	62	9	10
ø32	22	19.5	17	32	$12^{-0.01}_{-0.05}$	$26^{0}_{-0.033}$	13	8	45	6	37.5	$10^{-0.01}_{-0.05}$	M10×1.25	15	34.5	M26×1.5	1/8	64	9	10
ø40	24	21	22	41	$16^{-0.01}_{-0.05}$	$32^{0}_{-0.039}$	16	11	50	8	46.5	$14^{-0.01}_{-0.05}$	M14×1.5	21.5	42.5	M32×2	1/4	88	10	11

Bore Size	TX	TY	TZ	Z	ZZ
ø20	32	32	52	108	118
ø25	40	40	60	112	122
ø32	40	40	60	114	124
ø40	53	53	77	143.5	154

Integrated Clevis Type(E)

AXKE (Bore Size)—(Stroke)(◯)

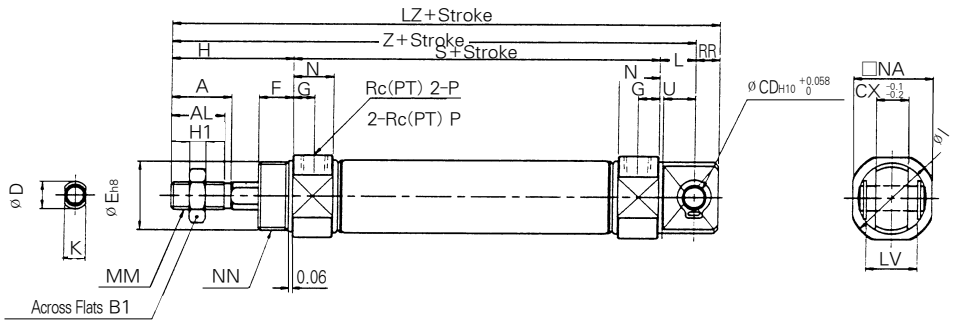

(mm)

Bore Size	A	AL	B_1	CD	CX	D	E	F	G	H	H_1	I	K	L	MM	N	NA	NN	P	RR
ø20	18	15.5	13	8	12	$10^{-0.01}_{-0.05}$	$20^{0}_{-0.033}$	13	8	41	5	27	$8^{-0.01}_{-0.05}$	12	M8×1.25	15	24	M20×1.5	1/8	9
ø25	22	19.5	17	8	12	$10^{-0.01}_{-0.05}$	$26^{0}_{-0.033}$	13	8	45	6	33	$8^{-0.01}_{-0.05}$	12	M8×1.25	15	30	M26×1.5	1/8	9
ø32	22	19.5	17	10	20	$12^{-0.01}_{-0.05}$	$26^{0}_{-0.033}$	13	8	45	6	37.5	$10^{-0.01}_{-0.05}$	15	M10×1.25	15	34.5	M26×1.5	1/8	12
ø40	24	21	22	10	20	$16^{-0.01}_{-0.05}$	$32^{0}_{-0.039}$	16	11	50	8	46.5	$14^{-0.01}_{-0.05}$	15	M14×1.5	21.5	42.5	M32×2	1/4	12

Bore Size	S	U	Z	ZZ	LV
ø20	62	11.5	115	124	18.4
ø25	62	11.5	119	128	18.4
ø32	64	14.5	124	136	28
ø40	88	14.5	153	165	28

Series AXKS

Non-Rotating Piston Rod Type/Single Acting:Spring Return, Spring Extended

Bore Size(mm) : ø20, ø25, ø32, ø40

- NUMEROUS MOUNTING OPTION
- MAGENT STANDARD FOR AUTO SWITCH
- BUMPERS STANDARD
- DESIGNED FOR NON-LUBRICATED SERVICE
- COMPACT LIGHT DESIGN
- REPLACEABLE ROD GLAND
- CUSTOM DESIGNED PISTON ROD FOR NON-ROTATION AND LONG ROD SEAL LIFE
- MANUFACTURING CERTIFIED TO ISO 9001 / 9002

Symbol

Single Acting Spring Return

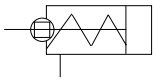

Single Acting Spring Extened

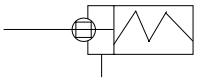

How to Order

AXKS L 32 — 50 S — ○ — W5 ○

1 2 3 4 5 6 7 8

1 Non-Rotating Piston Rod Type

2 Mounting
- B : Basic Type
- L : Axial Foot Type
- F : Rod Side Flange Type
- G : Head Side Flange Type
- C : Single Clevis Type
- D : Double Clevis Type
- T : Head Side Trunnion Type
- U : Rod Side Trunnion Type
- E : Integrated Clevis Type
- BZ : Boss-Cut Basic Type
- FZ : Boss-Cut Flange Type
- UZ : Boss-Cut Trunnion Type

3 Bore Size(mm)
- 20: ø20
- 25: ø25
- 32: ø32
- 40: ø40

4 Stroke/mm
※ For Stroke Refer to page 72.

5 Action
- S : Single Acting Spring Return
- T : Single Acting Spring Extend

6 Special Option
- Blank : Standard Type
- XC16 : Copper-Free

7 Applicable Auto Switch Reed Switch
(Band mounted type)
〔Grommet〕
- Blank : Without auto switch
- W5 : W5

Standard Lead 0.5m
(Up to 3m Optional)
(Example) W5 → W5L

8 Number of Switches
- Blank : 2 pcs.
- S : 1 pc.
- N : n pcs.

Model

Bore Size(mm)		ϕ20	ϕ25	ϕ32	ϕ40
Type		Air Cylinder			
Cushion		Rubber Cushion (Standard)			
Piping Method	Screwed Type	Rc(PT)1/8	Rc(PT)1/8	Rc(PT)1/8	Rc(PT)1/4

Specifications

Action		Spring Return	Spring Extended
Fluid		Air	
Proof Pressure		15kgf/cm^2 (1.5 MPa)	
Max. Operating Pressure		9.9kgf/cm^2 (1.0 MPa)	
Min. Operating Pressure		180 kgf/cm^2	230 kgf/cm^2
Ambient and Fluid Temperature		40~140℉ (5~60℃)	
Lubrication		None (Non-Lube)	
Thread Tolerance		KS 2 Class	
Stroke Tolerance		$^{+1.4}_{0}$ mm	
Mounting		Basic Type, Axial Foot Type, Rod Side Flange Type, Head Side Flange Type, Single Clevis Type, Double Clevis Type, Rod Side Trunnion Type, Head Side Trunnion Type, Integrated Clevis Type, Boss-Cut Type.	
Non-Rotating Accuracy	ϕ20, ϕ25	±0.8°	
	ϕ32, ϕ40	±0.5°	

Piston Speed

Bore Size (mm)	ϕ20	ϕ25	ϕ32	ϕ40
Piston Speed (mm/sec)	50~500			
Allowable Kinetic Energy (kgf-cm)	2.7	4	6.5	12

Auto Switch Specifications

Mounting	Lead Wire Entry	Reed Switch
Band Mounting Type	Grommet	W5

Standard Stroke

Bore size(mm)	Standard Stroke (mm)
ϕ20	25, 50, 75, 100, 125, 150
ϕ25	25, 50, 75, 100, 125, 150
ϕ32	25, 50, 75, 100, 125, 150, 200,
ϕ40	25, 50, 75, 100, 125, 150, 200, 250

Boss-Cut Type

Boss for the head cover bracket is eliminated and the total length of the cylinder is shortened.

Compared to the Total Length of Cylinder

(Compared to the basic type) (mm)

ø20	ø25	ø32	ø40
▲13	▲13	▲13	▲16

Mounting
- Boss-Cut Basic Type(BZ)
- Boss-Cut Flange Type(FZ)
- Boss-Cut Trunnion Type(UZ)

※ Spring return/( ):spring exlended

Mounting and Accessories

Mounting \ Accessories	Standard			Option	
	Mounting Nut	Rod End Nut	Clevis Pin	Single Knuckle Joint	Double Knuckle Joint
Basic Type	●(1pc.)	●	-	●	●
Axial Foot Type	●(2)	●	-	●	●
Rod Side Flange Type	●(1)	●	-	●	●
Head Side Flange Type	●(1)	●	-	●	●
Integrated Clevis Type	-	●	-	●	●
Single Clevis Type	-	●	-	●	●
Double Clevis Type	-	●	●	●	●
Head Side Trunnion Type	●(1)	●	-	●	●
Rod Side Trunnion Type	●(1)	●	-	●	●
Boss-Cut Basic Type	●(1)	●	-	●	●
Boss-Cut Flange Type	●(1)	●	-	●	●
Boss-Cut Trunnion Type	●(1)	●	-	●	●
Note					With pin

Weight Table

(kgf)

Bore Size(mm)		ø20	ø25	ø30	ø40
Basic Weight	25 Stroke	0.20(0.19)	0.31(0.30)	0.43(0.41)	0.78(0.75)
	50 Stroke	0.23(0.21)	0.34(0.33)	0.48(0.45)	0.86(0.83)
	75 Stroke	0.29(0.25)	0.43(0.41)	0.61(0.56)	1.08(0.99)
	100 Stroke	0.31(0.27)	0.47(0.44)	0.66(0.56)	1.14(1.06)
	125 Stroke	0.37(0.32)	0.56(0.52)	0.66(0.60)	0.34(1.23)
	150 Stroke	0.39(0.34)	0.59(0.55)	0.81(0.72)	1.39(1.31)
	175 Stroke	-(-)	- (-)	0.85(0.76)	1.71(1.54)
	200 Stroke	-(-)	- (-)	1.04(0.92)	2.00(1.78)
Mounting Bracket Weight	Foot type	0.15(0.15)	0.16(0.16)	- (-)	0.27(0.27)
	Flang type	0.06(0.06)	0.09(0.09)	0.16(0.16)	0.12(0.12)
	Single clevis type	0.04(0.04)	0.04(0.04)	0.09(0.09)	0.09(0.09)
	Double Knuckle Joint(with PIN) type	0.05(0.05)	0.06(0.06)	0.04(0.04)	0.13(0.13)
	Double clevis type	0.04(0.04)	0.07(0.07)	0.06(0.06)	0.10(0.10)
	Trunnion type	-0.02(-0.02)	-0.02(-0.02)	0.07(0.07)	-1.14(-0.04)
	Intergrated clevis type	-0.01(-0.01)	-0.02(-0.02)	-0.01(-0.01)	-0.03(-0.03)
	Boss-cut basic type	0.05(0.05)	0.07(0.07)	-0.02(-0.02)	0.09(0.09)
	Boss-cut flange type	0.03(0.03)	0.05(0.05)	0.07(0.07)	0.07(0.07)
Accessories	Boss-cut trunnion type	0.06(0.06)	0.06(0.06)	0.05(0.05)	0.23(0.23)
	Single knuckle joint type	0.07(0.07)	0.07(0.07)	0.06(0.06)	0.20(0.20)

Calculation
Example:AXKL32-100S(Bore size ø32, Foot type, 100st)
Basic weight…0.66+(Mounting bracket weight)0.16=0.82kgf

Basic Type (B)

AXKB (Bore Size)–(Stroke) S / T

Basic Type

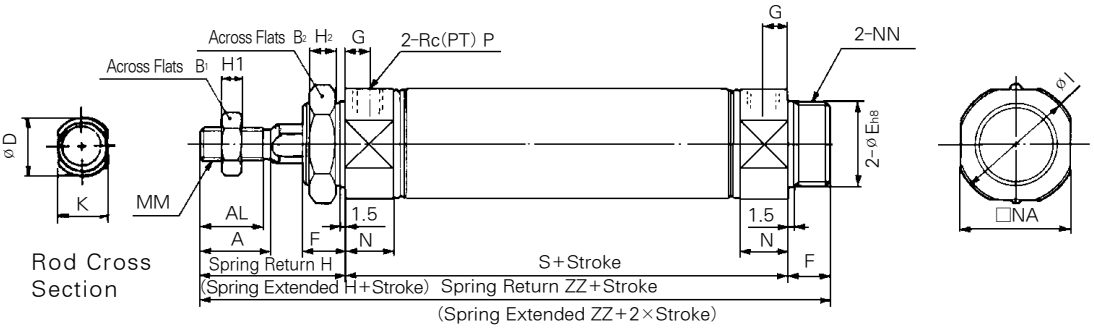

Boss-Cut Type

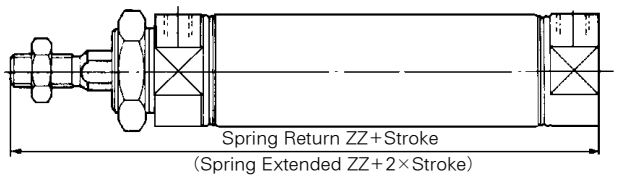

(mm)

Bore Size	A	AL	B	B_1	B_2	C_2	D	E	F	FD	FT	FX	FY	FZ	G	H	H_1	H_2	I	K	MM	N	NA	NN	P
ø20	18	15.5	34	13	26	30	$10^{-0.01}_{-0.05}$	$20^{0}_{-0.033}$	13	7	4	60	–	75	8	41	5	8	27	$8^{-0.01}_{-0.05}$	M8×1.25	15	24	M20×1.5	1/8
ø25	22	19.5	40	17	32	37	$10^{-0.01}_{-0.05}$	$26^{0}_{-0.033}$	13	7	4	60	–	75	8	45	6	8	33	$8^{-0.01}_{-0.05}$	M8×1.25	15	30	M26×1.5	1/8
ø32	22	19.5	40	17	32	37	$12^{-0.01}_{-0.05}$	$26^{0}_{-0.033}$	13	7	4	60	–	75	8	45	6	8	37.5	$10^{-0.01}_{-0.05}$	M10×1.25	15	34.5	M26×1.5	1/8
ø40	24	21	52	22	41	47.3	$16^{-0.01}_{-0.05}$	$32^{0}_{-0.039}$	16	7	5	66	36	82	11	50	8	10	46.5	$14^{-0.01}_{-0.05}$	M14×1.5	21.5	42.5	M32×2	1/4

Stroke Dimension Adder (mm)

Stroke / Symbol / Bore Size	1~50		51~100		101~150		151~200		201~250	
	S	ZZ	S	ZZ	S	ZZ	S	ZZ	S	ZZ
ø20	87	141	112	166	137	191	–	–	–	–
ø25	87	145	112	170	137	195	–		–	–
ø32	89	147	114	172	139	197	164	222	–	–
ø40	113	179	138	204	163	229	188	254	213	279

Boss-Cut Type (mm)

Stroke / Symbol / Bore Size	1~50	51~100	101~150	151~200	201~250
	ZZ	ZZ	ZZ	ZZ	ZZ
ø20	128	153	178	–	–
ø25	132	157	182	–	–
ø32	134	159	184	209	–
ø40	163	188	213	238	263

Foot Type(L)

AXKL (Bore Size)–(Stroke) S/T

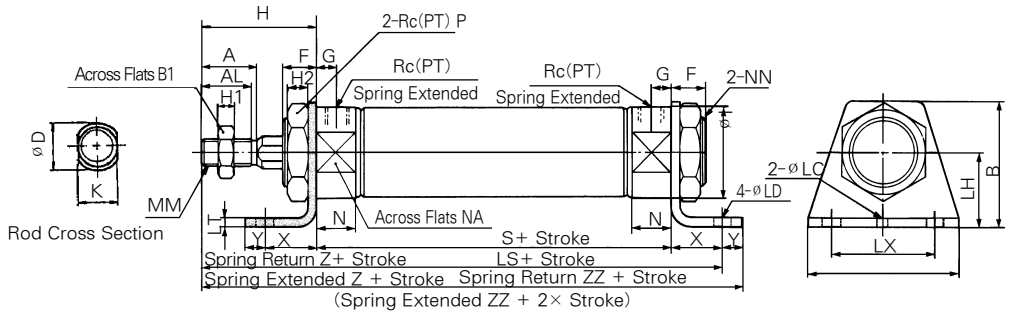

(mm)

Bore Size	A	AL	B	B_1	B_2	D	F	G	H	H_1	H_2	I	K	LC	LD	LH	LT	LX	LZ	MM	N	NA	NN	P	X	Y	Z
ø20	18	15.5	40	13	26	$10^{-0.01}_{-0.05}$	13	8	45	5	8	27	$8^{-0.01}_{-0.05}$	4	6.8	25	3.2	40	55	M8×1.25	15	24	M20×1.5	1/8	20	8	21
ø25	22	19.5	47	17	32	$10^{-0.01}_{-0.05}$	13	8	45	6	8	33	$8^{-0.01}_{-0.05}$	4	6.8	28	3.2	40	55	M8×1.25	15	30	M26×1.5	1/8	20	8	25
ø32	22	19.5	47	17	32	$12^{-0.01}_{-0.05}$	13	8	45	6	8	37.5	$10^{-0.01}_{-0.05}$	4	6.8	28	3.2	40	55	M10×1.25	15	34.5	M26×1.5	1/8	20	8	25
ø40	24	21	54	22	41	$16^{-0.01}_{-0.05}$	16	11	50	8	10	46.5	$14^{-0.01}_{-0.05}$	4	7	30	3.2	55	75	M14×1.5	21.5	42.5	M32×2	1/4	23	10	27

Stroke Dimension Adder

Bore Size \ Stroke / Symbol	1~50			51~100			101~150			151~200			201~250		
	S	LS	ZZ	S	LS	ZZ	S	LS	ZZ	S	LS	ZZ	S	LS	ZZ
ø20	87	127	156	112	152	181	137	177	206	–	–	–	–	–	–
ø25	87	127	160	112	152	185	137	177	210	–	–	–	–	–	–
ø32	89	129	162	114	154	187	139	179	212	164	204	237	–	–	–
ø40	113	159	196	138	184	221	163	209	246	188	234	271	213	259	296

Head Side Flange Type(G)

AXKG (Bore Size)–(Stroke) S/T

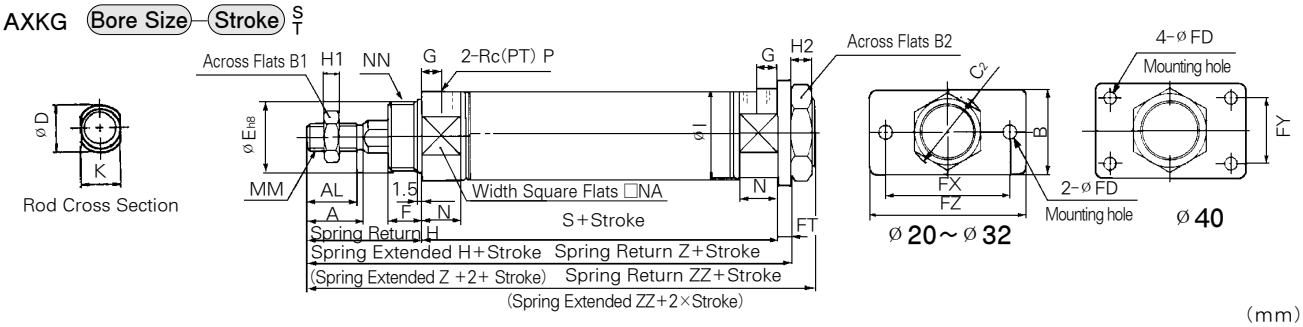

(mm)

Bore Size	A	AL	B	B_1	B_2	C_2	D	E	F	FD	FT	FX	FY	FZ	G	H	H_1	H_2	I	K	MM	N	NA	NN	P	Z
ø20	18	15.5	34	13	26	30	$10^{-0.01}_{-0.05}$	$20^{0}_{-0.033}$	13	7	4	60	–	75	8	41	5	8	27	$8^{-0.01}_{-0.05}$	M8×1.25	15	24	M20×1.5	1/8	37
ø25	22	19.5	40	17	32	37	$10^{-0.01}_{-0.05}$	$26^{0}_{-0.033}$	13	7	4	60	–	75	8	45	6	8	33	$8^{-0.01}_{-0.05}$	M8×1.25	15	30	M26×1.5	1/8	41
ø32	22	19.5	40	17	32	37	$12^{-0.01}_{-0.05}$	$26^{0}_{-0.033}$	13	7	4	60	–	75	8	45	6	8	37.5	$10^{-0.01}_{-0.05}$	M10×1.25	15	34.5	M26×1.5	1/8	41
ø40	24	21	52	22	41	47.3	$16^{-0.01}_{-0.05}$	$32^{0}_{-0.039}$	16	7	5	66	36	82	11	50	8	10	46.5	$14^{-0.01}_{-0.05}$	M14×1.5	21.5	42.5	M30×2	1/4	45

Stroke Dimension Adder

(Unit : mm)

Bore Size \ Stroke / Symbol	1~50			51~100			101~150			151~200			201~250		
	S	Z	ZZ	S	Z	ZZ	S	Z	ZZ	S	Z	ZZ	S	Z	ZZ
ø20	87	132	141	112	157	166	137	182	191	–	–	–	–	–	–
ø25	87	136	145	112	161	170	137	186	195	–	–	–	–	–	–
ø32	89	138	147	114	163	172	139	188	197	164	213	222	–	–	–
ø40	113	168	179	138	193	204	163	218	229	188	243	254	213	268	279

Rod Side Flange Type(F)

AXKF (Bore Size)-(Stroke) S/T

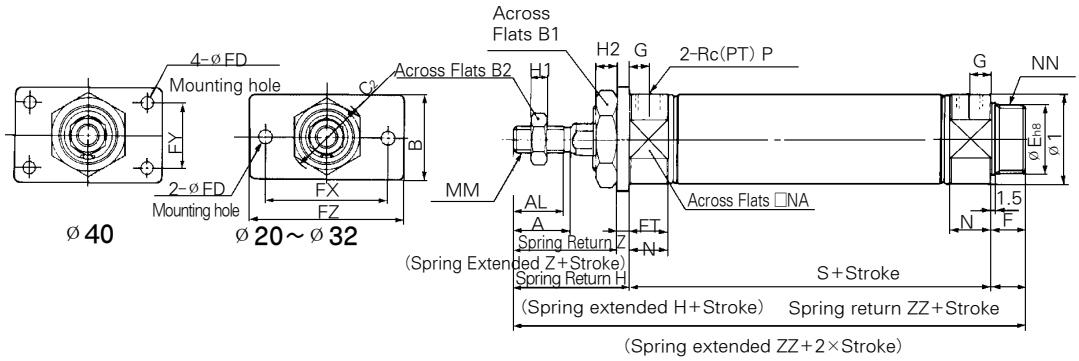

Boss-Cut type

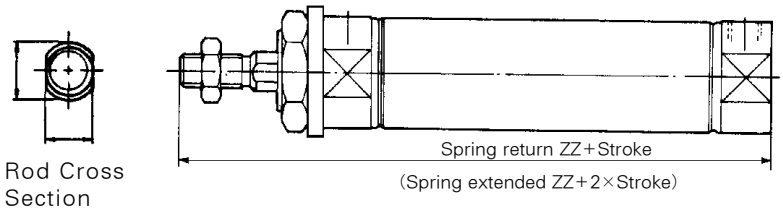

※ This Drawing is Spring Extended.

(mm)

Bore Size	A	AL	B	B_1	B_2	C_2	D	E	F	FD	FT	FX	FY	FZ	G	H	H_1	H_2	I	K	MM	N	NA	NN	P	Z
ø 20	18	15.5	34	13	26	30	$10^{-0.01}_{-0.05}$	$20^{0}_{-0.033}$	13	7	4	60	–	75	8	41	5	8	27	$8^{-0.01}_{-0.05}$	M8×1.25	15	24	M20×1.5	1/8	37
ø 25	22	19.5	40	17	32	37	$10^{-0.01}_{-0.05}$	$26^{0}_{-0.033}$	13	7	4	60	–	75	8	45	6	8	33	$8^{-0.01}_{-0.05}$	M8×1.25	15	30	M26×1.5	1/8	41
ø 32	22	19.5	40	17	32	37	$12^{-0.01}_{-0.05}$	$26^{0}_{-0.033}$	13	7	4	60	–	75	8	45	6	8	37.5	$10^{-0.01}_{-0.05}$	M10×1.25	15	34.5	M26×1.5	1/8	41
ø 40	24	21	52	22	41	47.3	$16^{-0.01}_{-0.05}$	$32^{0}_{-0.039}$	16	7	5	66	36	82	11	50	8	10	46.5	$14^{-0.01}_{-0.05}$	M14×1.5	21.5	42.5	M32×2	1/4	45

Stroke Dimension Adder (mm)

Bore Size \ Stroke / Symbol	1~50		51~100		101~150		151~200		201~250	
	S	ZZ	S	ZZ	S	ZZ	S	ZZ	S	ZZ
ø 20	87	141	112	166	137	191	–	–	–	–
ø 25	87	145	112	170	137	195	–		–	–
ø 32	89	147	114	172	139	197	164	222	–	–
ø 40	113	179	138	204	163	229	188	254	213	279

Boss-Cut Type/Distinction of Stroke (mm)

Bore Size \ Stroke / Symbol	1~50	51~100	101~150	151~200	201~250
	ZZ	ZZ	ZZ	ZZ	ZZ
ø 20	128	153	178	–	–
ø 25	132	157	182	–	–
ø 32	134	159	184	209	–
ø 40	163	188	213	238	263

Single Clevis Type (C)

AXKG (Bore Size)–(Stroke) S/T

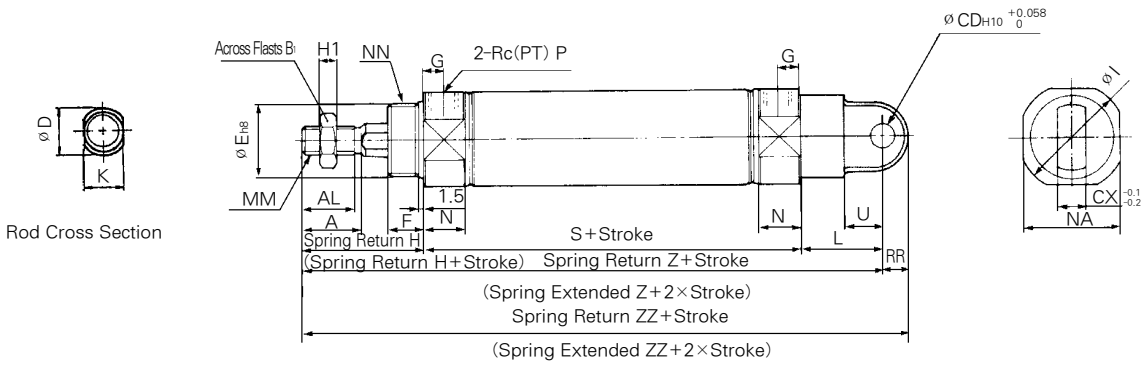

(mm)

Bore Size	A	AL	B_1	CD	CX	D	E	F	G	H	H_1	I	K	L	MM	N	NA	NN	P	RR	U
ø20	18	15.5	13	9	10	$10^{-0.01}_{-0.05}$	$20^{0}_{-0.033}$	13	8	41	5	27	$8^{-0.01}_{-0.05}$	30	M8×1.25	15	24	M20×1.5	1/8	9	14
ø25	22	19.5	17	9	10	$10^{-0.01}_{-0.05}$	$26^{0}_{-0.033}$	13	8	45	6	33	$8^{-0.01}_{-0.05}$	30	M8×1.25	15	30	M26×1.5	1/8	9	14
ø32	22	19.5	17	9	10	$12^{-0.01}_{-0.05}$	$26^{0}_{-0.033}$	13	8	45	6	37.5	$10^{-0.01}_{-0.05}$	30	M10×1.25	15	34.5	M26×1.5	1/8	9	14
ø40	24	21	22	10	15	$16^{-0.01}_{-0.05}$	$32^{0}_{-0.039}$	16	11	50	8	46.5	$14^{-0.01}_{-0.05}$	39	M14×1.5	21.5	42.5	M32×2	1/4	11	18

Stroke Dimension Adder

Bore Size \ Stroke / Symbol	1~50			51~100			101~150			151~200			201~250		
	S	Z	ZZ	S	Z	ZZ	S	Z	ZZ	S	Z	ZZ	S	Z	ZZ
ø20	87	158	167	112	183	192	137	208	217	–	–	–	–	–	–
ø25	87	162	171	112	187	196	137	212	221	–	–	–	–	–	–
ø32	89	164	173	114	189	198	139	214	223	164	239	248	–	–	–
ø40	113	202	213	138	227	238	163	252	263	188	277	288	213	302	313

Double Clevis Type (D)

AXKG (Bore Size)–(Stroke) S/T

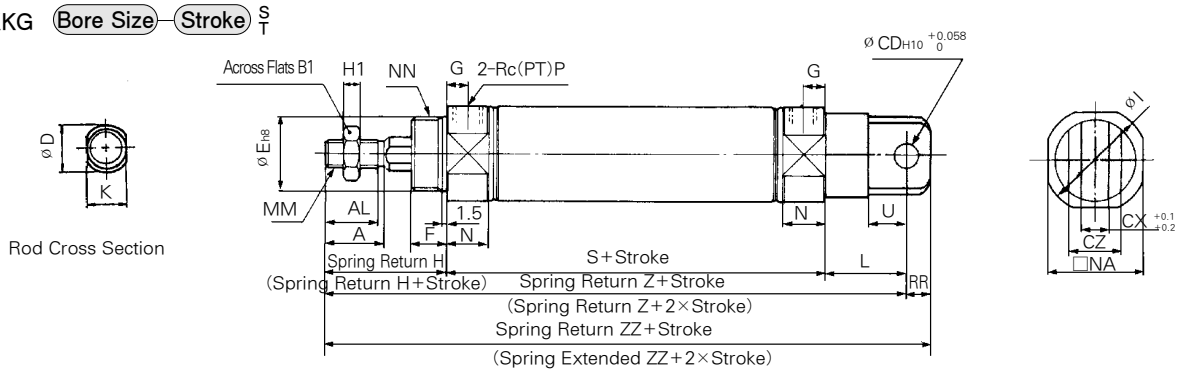

(mm)

Bore Size	A	AL	B_1	CD	CX	CZ	D	E	F	G	H	H_1	I	K	L	MM	N	NA	NN	P	RR	U
ø20	18	15.5	13	9	10	19	$10^{-0.01}_{-0.05}$	$20^{0}_{-0.033}$	13	8	41	5	27	$8^{-0.01}_{-0.05}$	30	M8×1.25	15	24	M20×1.5	1/8	9	14
ø25	22	19.5	17	9	10	19	$10^{-0.01}_{-0.05}$	$26^{0}_{-0.033}$	13	8	45	6	33	$8^{-0.01}_{-0.05}$	30	M8×1.25	15	30	M26×1.5	1/8	9	14
ø32	22	19.5	17	9	10	19	$12^{-0.01}_{-0.05}$	$26^{0}_{-0.033}$	13	8	45	6	37.5	$10^{-0.01}_{-0.05}$	30	M10×1.25	15	34.5	M26×1.5	1/8	9	14
ø40	24	21	22	10	15	30	$16^{-0.01}_{-0.05}$	$32^{0}_{-0.039}$	16	11	50	8	46.5	$14^{-0.01}_{-0.05}$	39	M14×1.5	21.5	42.5	M32×2	1/4	11	18

Stroke Dimension Adder

(Unit : mm)

Bore Size \ Stroke / Symbol	1~50			51~100			101~150			151~200			201~250		
	S	Z	ZZ	S	Z	ZZ	S	Z	ZZ	S	Z	ZZ	S	Z	ZZ
ø20	87	158	167	112	183	192	137	208	217	–	–	–	–	–	–
ø25	87	162	171	112	187	196	137	212	221	–	–	–	–	–	–
ø32	89	164	173	114	189	198	139	214	223	164	239	248	–	–	–
ø40	113	202	213	138	227	238	163	252	263	188	277	288	213	302	313

Rod Side Trunnion Type(U)

AXKU (Bore Size) — (Stroke) S T

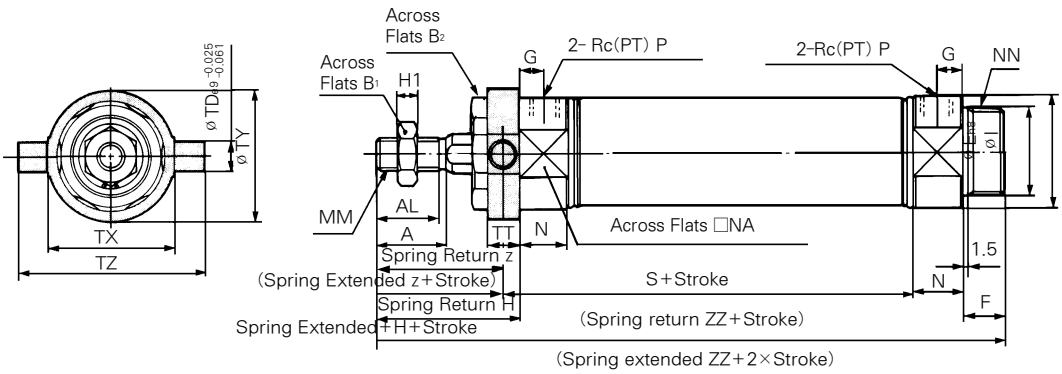

Boss-cut type

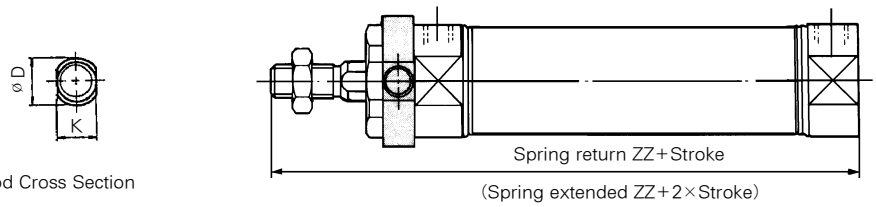

※ This Drawing is Spring Extended.

(mm)

Bore Size	A	AL	B_1	B_2	D	E	F	G	H	H_1	I	K	MM	N	NA	NN	P	TD	TT	TX	TY	TZ	Z
ø20	18	15.5	13	26	$10^{-0.01}_{-0.05}$	$20^{0}_{-0.033}$	13	8	41	5	27	$8^{-0.01}_{-0.05}$	M8×1.25	15	24	M20×1.5	1/8	8	10	32	32	52	36
ø25	22	19.5	17	32	$10^{-0.01}_{-0.05}$	$26^{0}_{-0.033}$	13	8	45	6	33	$8^{-0.01}_{-0.05}$	M8×1.25	15	30	M26×1.5	1/8	9	10	40	40	60	40
ø32	22	19.5	17	32	$12^{-0.01}_{-0.05}$	$26^{0}_{-0.033}$	13	8	45	6	37.5	$10^{-0.01}_{-0.05}$	M10×1.25	15	34.5	M26×1.5	1/8	9	10	40	40	60	40
ø40	24	21	22	41	$16^{-0.01}_{-0.05}$	$32^{0}_{-0.039}$	16	11	50	8	46.5	$14^{-0.01}_{-0.05}$	M14×1.5	21.5	42.5	M32×2	1/4	10	11	53	53	77	44.5

Stroke Dimension Adder

(mm)

Bore Size \ Stroke / Symbol	1~50		51~100		101~150		151~200		201~250	
	S	ZZ	S	ZZ	S	ZZ	S	ZZ	S	ZZ
ø20	87	141	112	166	137	191	–	–	–	–
ø25	87	145	112	170	137	195	–		–	–
ø32	89	147	114	172	139	197	164	222	–	–
ø40	113	179	138	204	163	229	188	254	213	279

Boss-Cut

(mm)

Bore Size \ Stroke / Symbol	1~50	51~100	101~150	151~200	201~250
	ZZ	ZZ	ZZ	ZZ	ZZ
ø20	128	153	178	–	–
ø25	132	157	182	–	–
ø32	134	159	184	209	–
ø40	163	188	213	238	263

Head Side Trunnion type (T)

AXKT Bore Size — Stroke S/T

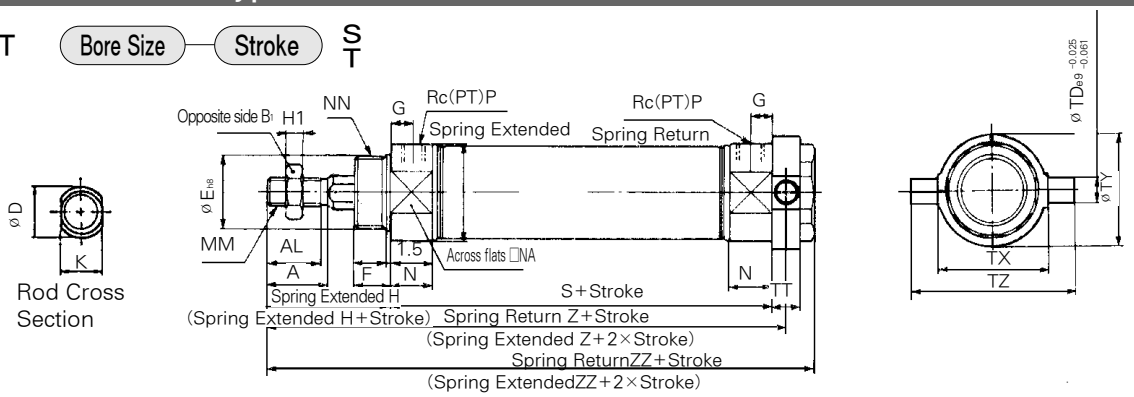

(mm)

Bore Size	A	AL	B_1	B_2	D	E	F	G	H	H_1	I	K	MM	N	NA	NN	P	TD	TT	TX	TY	YZ
ø20	18	15.5	13	26	$10^{-0.01}_{-0.05}$	$20^{0}_{-0.033}$	13	8	41	5	27	$8^{-0.01}_{-0.05}$	M8×1.25	15	24	M20×1.5	1/8	8	10	32	32	52
ø25	22	19.5	17	32	$10^{-0.01}_{-0.05}$	$26^{0}_{-0.033}$	13	8	45	6	33	$8^{-0.01}_{-0.05}$	M8×1.25	15	30	M26×1.5	1/8	9	10	40	40	60
ø32	22	19.5	17	32	$12^{-0.01}_{-0.05}$	$26^{0}_{-0.033}$	13	8	45	6	37.5	$10^{-0.01}_{-0.05}$	M10×1.25	15	34.5	M26×1.5	1/8	9	10	40	40	60
ø40	24	21	22	41	$16^{-0.01}_{-0.05}$	$32^{0}_{-0.039}$	16	11	50	8	46.5	$14^{-0.01}_{-0.05}$	M14×1.5	21.5	42.5	M32×2	1/4	10	11	53	53	77

Stroke Dimension Adder

(mm)

Bore Size \ Stroke / Symbol	1~50			51~100			101~150			151~200			201~250		
	S	Z	ZZ	S	Z	ZZ	S	Z	ZZ	S	Z	ZZ	S	Z	ZZ
ø20	87	133	143	112	158	168	137	183	193	—	—	—	—	—	—
ø25	87	137	147	112	162	172	137	187	197	—	—	—	—	—	—
ø32	89	139	149	114	164	174	139	189	199	164	214	224	—	—	—
ø40	113	168.5	179	138	193.5	204	163	218.5	229	188	243.5	254	213	268.5	279

Single Clevis Type(E)

AXKE Bore Size — Stroke S/T

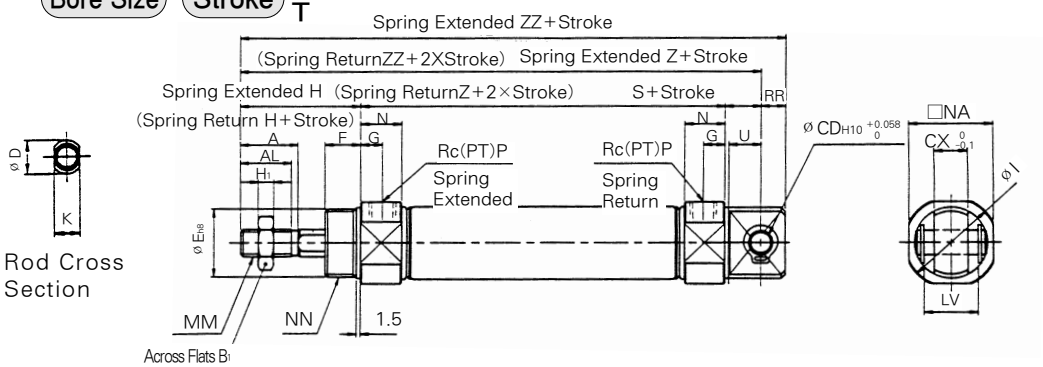

(mm)

Bore Size	A	AL	B_1	CD	CX	D	E	F	G	H	H_1	I	K	L	LV	MM	N	NA	NN	P	RR	U
ø20	18	15.5	13	8	12	$10^{-0.01}_{-0.05}$	$20^{0}_{-0.033}$	13	8	41	5	27	$8^{-0.01}_{-0.05}$	12	18.4	M8×1.25	15	24	M20×1.5	1/8	9	11.5
ø25	22	19.5	17	8	12	$10^{-0.01}_{-0.05}$	$26^{0}_{-0.033}$	13	8	45	6	33	$8^{-0.01}_{-0.05}$	12	18.4	M8×1.25	15	30	M26×1.5	1/8	9	11.5
ø32	22	19.5	17	10	20	$12^{-0.01}_{-0.05}$	$26^{0}_{-0.033}$	13	8	45	6	37.5	$10^{-0.01}_{-0.05}$	15	28	M10×1.25	15	34.5	M26×1.5	1/8	12	14.5
ø40	24	21	22	10	20	$16^{-0.01}_{-0.05}$	$32^{0}_{-0.039}$	16	11	50	8	46.5	$14^{-0.01}_{-0.05}$	15	28	M14×1.5	21.5	42.5	M32×2	1/4	12	14.5

Stroke Dimension Adder

(mm)

Bore Size \ Stroke / Symbol	1~50			51~100			101~150			151~200			201~250		
	S	Z	ZZ	S	Z	ZZ	S	Z	ZZ	S	Z	ZZ	S	Z	ZZ
ø20	87	140	149	112	165	174	137	190	199	—	—	—	—	—	—
ø25	87	144	153	112	169	178	137	194	203	—	—	—	—	—	—
ø32	89	149	161	114	174	186	139	199	211	164	224	236	—	—	—
ø40	113	178	190	138	203	215	163	228	240	188	253	265	213	278	290

Series AXR

Direct Mounting Cylinder/Double Acting Single Rod

Bore size(mm) : ø20, ø25, ø32, ø40

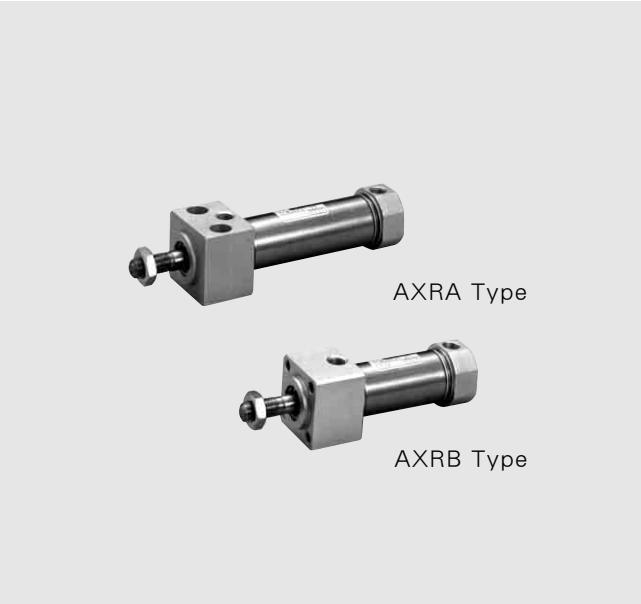

- STAINLESS STEEL BODY
- HIGH CYCLE LIFE
- LOW BREAKAWAY
- MAGNET STANDARD FOR AUTO SWITCH
- BUMPERS STANDARD
- DESIGNED FOR NON-LUBRICATED SERVICE
- COMPACT LIGHT DESIGN
- ADJUSTABLE STROKE AVAILABLE
- REPLACEABLE ROD GLAND
- MANUFACTURING CERTIFIED TO ISO 9001 / 9002

Symbol

Double Acting / Single Rod

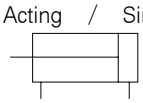

How to Order

AXR — A — 20 — 25 — ○ — W5 — □

1 2 3 4 5 6 7

1 Direct Mount

2 Mounting
A : Rear Pivot Mounting
B : Front Face Mounting

3 Bore Size(mm)
20 : ø20
25 : ø25
32 : ø32
40 : ø40

4 Stroke/mm
※ For Stroke Refer to Page A-81.

5 Series
Blank : Standard type
XC16 : Copper-free

6 Applicable Auto Switch Reed Switch
(Band Mounted Type)
〈Grommet〉
Blank : Without Auto Switch
W5 : W5
※Standard Lead Length 0.5m
(Up to 3m Optional)
(Example) W5 → W5L

7 Number of Switches
Blank : 2 pcs.
S : 1 pc.
n : (n) pcs.

PART No. of Auto Switch Mounting Band

Auto Switch Model	Bore size (mm)			
	ø20	ø25	ø32	ø40
W5	TBM2-020	TBM2-025	TBM2-032	TBM2-040

Specifications

Action	Double Acting Single Rod
Fluid	Air
Proof Pressure	15kgf/cm²(1.5MPa)
Max. Operating Pressure	9.9kgf/cm² (1.0MPa)
Min. Operating Pressure	0.5kgf/cm² (0.05MPa)
Ambient and Fluid Temperature	40~140°F (5~60°C)
Lubricant	None(Non-Lube)
Stroke Tolerance	$^{+1.4}_{0}$mm
Mounting	Flush Mounting, Front Nose Mounting

Piston Speed

Bore Size(mm)	Ø20	Ø25	Ø32	Ø40
Piston Speed(mm/sec)	50~750			
Allowable Kinetic Energy(kgf-cm)	2.7	4	6.5	12

Standard Stroke

Bore Size(mm)	Standard Stroke(mm)
Ø20	25, 50, 75, 100, 125, 150
Ø25	25, 50, 75, 100, 125, 150, 200
Ø32	25, 50, 75, 100, 125, 150, 200
Ø40	25, 50, 75, 100, 125, 150, 200, 250, 300

Auto Switch Specifications

Mounting	Lead Wire Entry	Reed Switch
Band Mounting Type	Grommet	W5

Mounting and Accessories

Accessories / Mounting	Standard	Option	
	Rod End Nut	Single Knuckel Joint	Double Knuckel Joint
Rear Pivot Mounting	●	●	●
Front Nose Mounting	●	●	●

Weight Table

kgf

Bore size(mm)		Ø20	Ø25	Ø32	Ø40
Basic Weight	Rear Pivot Mounting	0.14	0.23	0.32	0.62
	Front Nose Mounting	0.14	0.22	0.32	0.61
Additional Weight For Each 50 mm of Stroke		0.04	0.06	0.08	0.13

Calculation Example : AXRA 32-100

• Basic weight ··· 0.32 • Additional weight ··· 0.08/50 stroke • Cylinder stroke ··· 100 stroke

0.32+0.08×100/50=0.48 kgf

Construction/Parts List

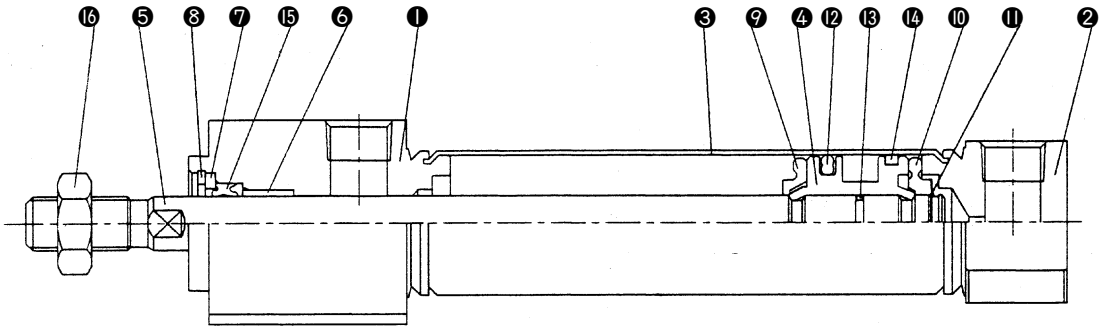

Parts List

No.	Description	Material	Remarks
❶	Rod Cover	Aluminum Alloy	White Alumite
❷	Head Cover	Aluminum Alloy	White Alumite
❸	Cylinder Tube	Stainless Steel	
❹	Piston	Aluminum Alloy	Chromate
❺	Piston Rod	Carbon Steel	Hard Chrome Plated
❻	Bushing	Sintered BR	
❼	Packing	NBR	Nickel Plated
❽	Retaining Ring	Carbon Steel	Nickel Plated
❾	Bumper A	Urethane	
❿	Bumper B	Urethane	
⓫	Retaining Ring	Carbon Tool Steel	
⓬	Piston Packing	NBR	
⓰	Rod End Nut	Carbon Steel	Nickel Plated

Packing List

No.	Description	Material	Bore Size (mm)			
			Ø 20	Ø 25	Ø 32	Ø 40
⓭	Piston Packing	NBR	PSD20	PSD25	PSD30	PSD40
⓮	Wear Ring	Resin				
⓯	Rod Packing	NBR	PDU-10	PDU-12LZ	PDU-24LZ	PDU-16Z

Rear Pilot Mounting

AXRA Bore Size — Stroke

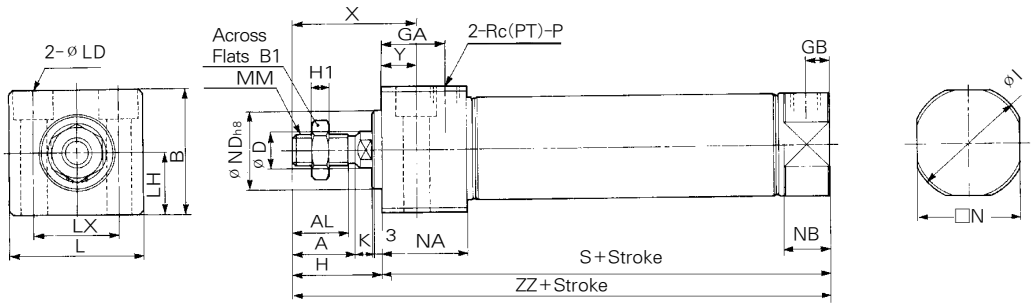

(Unit:mm)

Bore size	Stroke range
ø 20	~150
ø 25	~200
ø 32	~200
ø 40	~300

(Unit:mm)

Bore Size	A	AL	B	B_1	D	GA	GB	H	H_1	I	K	L	LD	LH	LX	MM	N	NA	NB	ND	P	S	X	Y	ZZ
ø 20	18	15.5	30.3	13	8	22	8	27	5	27	5	33.5	ø5.5, ø9.5C-BORE Dp6.5	15	21	M8×1.25	24	29	15	$20^{0}_{-0.033}$	1/8	76	39	12	103
ø 25	22	19.5	36.3	17	10	22	8	31	6	33	5.5	39	ø6.6, ø11C-BORE Dp7.5	18	25	M10×1.25	30	29	15	$26^{0}_{-0.033}$	1/8	76	43	12	107
ø 32	22	19.5	42.3	17	12	22	8	31	6	37.5	5.5	47	ø9, ø14C-BORE Dp10	21	30	M10×1.25	34.5	29	15	$26^{0}_{-0.033}$	1/8	78	43	12	109
ø 40	24	21	52.3	22	14	27	11	34	8	46.5	7	58.5	ø11, ø17.5C-BORE Dp12.5	26	38	M14×1.5	42.5	37.5	21.5	$32^{0}_{-0.039}$	1/4	104	49	15	138

Front Face Mounting

AXRB Bore Size — Stroke

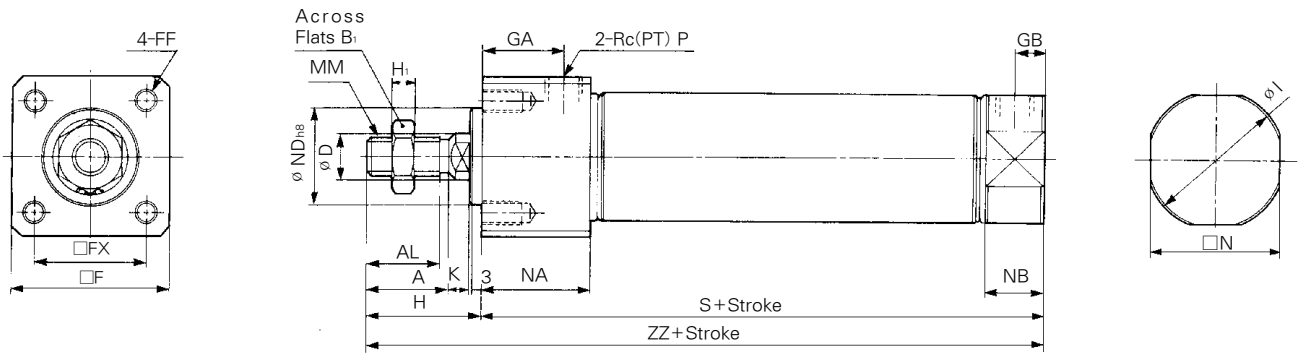

(Unit : mm)

Bore Size	A	AL	B_1	D	F	FF	FX	GA	GB	H	H_1	I	K	MM	N	NA	NB	ND	P	S	ZZ	Stroke
ø 20	18	15.5	13	8	30.4	M5×0.8Depth9	22	22	8	27	5	27	5	M8×1.25	24	29	15	$20^{0}_{-0.033}$	1/8	76	103	~150
ø 25	22	19.5	17	10	36.4	M6×1Depth11	26	22	8	31	6	33	5.5	M10×1.25	30	29	15	$26^{0}_{-0.033}$	1/8	76	107	~200
ø 32	22	19.5	17	12	42.4	M6×1Depth11	30	22	8	31	6	37.5	5.5	M10×1.25	34.5	29	15	$26^{0}_{-0.033}$	1/8	78	109	~200
ø 40	24	21	22	14	52.4	M8×1.25Depth14	36	27	11	34	8	46.5	7	M14×1.5	42.5	37.5	21.5	$32^{0}_{-0.039}$	1/4	104	138	~300

① Adjustable Stroke Cylinder/Extension Adjustable Type

AXR (Mounting) (Bore Size) — (Stroke) (Stroke Adjusting Symbol) — XC8

- **Stroke adjusting symbol**

A-Stroke Adjusting Range 0~25 mm
B-Stroke Adjusting Range 0~50 mm

The extended stroke of the cylinder can be adjusted by the stopper on the head side from full stroke (0~25) mm or (0~50) mm.

Symbol

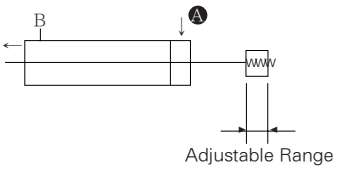

Specifications

Type	Air Cylinder
Applicable Bore Size	ø20, ø25, ø32, ø40
Action	Double Acting Single Rod
Piston Speed(mm/sec)	50~750
Cushion	Rubber Cushion(Standard)
Stroke Adjusting System	Stopper Adjustment
Stroke Adjusting Range	A:0~25 mm, B : 0~50 mm
Mounting	Rear Pivot Mounting, Front Nose Mounting

Dimensions

Rear Pilot Mounting

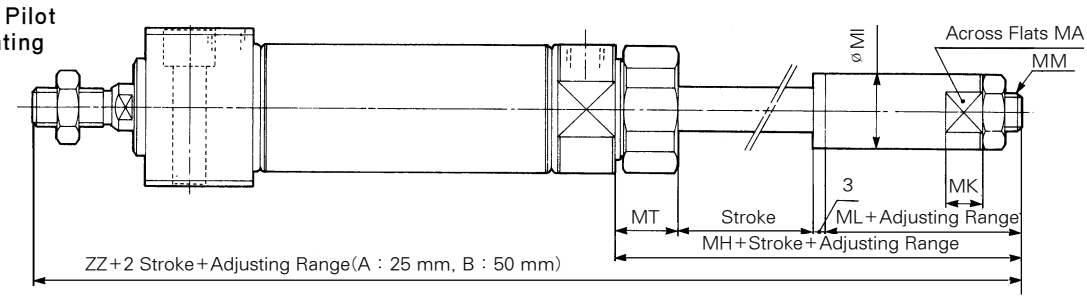

Front Face Mounting

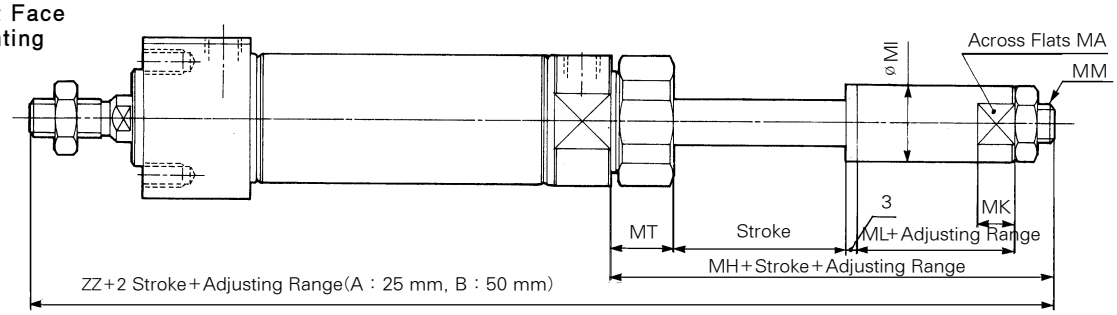

(mm)

Bore Size	MA	MH	MI	MK	ML	MM	MT	ZZ
ø20	12	47	15	8	18	M8×1.25	16.5	150
ø25	17	49	20	10	18	M10×1.25	17.5	156
ø32	17	49	20	10	18	M10×1.25	17.5	158
ø40	22	60	25	12	22	M14×1.5	21.5	198

※ Other dimensions are the same as for standard type.

② Adjustable Stroke Cylinder/Retraction Adjustable Type

TCM2R (Mounting) (Bore Size) — (Stroke) (Stroke Adjusting Symbol) — XC9

• **Stroke Adjusting Symbol**

A-Stroke Adjusting Range 0~25 mm
B-Stroke Adjusting Range 0~50 mm

The retracted stroke of the cylinder can be adjusted from (0~25) mm or (0~50) mm by the adjusting bolt.

Symbol

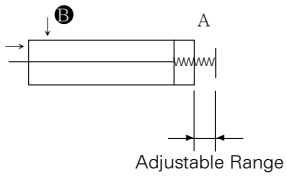

Specifications

Type	Air Cylinder
Applicable Bore Size	ø20, ø25, ø32, ø40
Action	Double Acting Single Rod
Piston Speed(mm/sec)	50~750
Cushion	Rubber Cushion(Standard)
Stroke Adjusting System	Stopper Adjustment
Stroke Adjusting Range	A:0~25 mm, B : 0~50 mm
Mounting	Rear Pivot Mounting, Front Nose Mounting

Dimensions

Rear Pilot Mounting

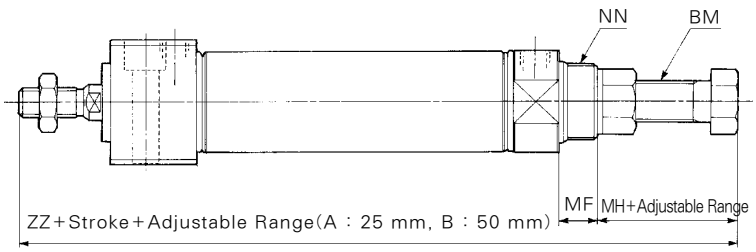

Front Face Mounting

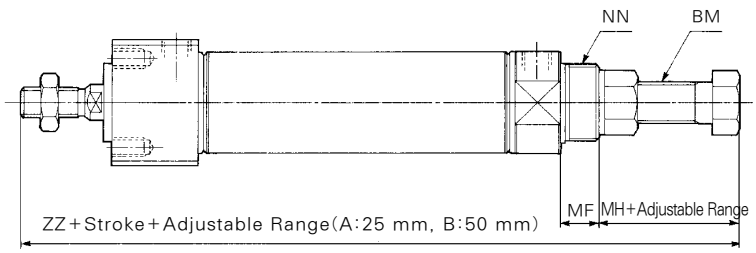

(Unit : mm)

Bore Size	BM	MF	MH	NN	ZZ
ø20	M8×1.25	13	20	M20×1.5	136
ø25	M8×1.25	13	20	M26×1.5	140
ø32	M8×1.25	13	20	M26×1.5	142
ø40	M12×1.75	16	24	M30×2	178

※ Other dimensions are the same as for standard type.

Series AXRK

Non-Rotating Piston Rod Direct Mounting type

Bore Size(mm) : ø20, ø25, ø32, ø40

- DIRECT MOUNT CYLINDER
- HIGH ANTI-ROTATING ACCURACY
- SPACE SAVING CYLINDER
- SQUARE ROD COVER MAKES DIRECT MOUNTING POSSIBLE

Symbol

Double acting/Single rod
Non-rotating Piston rod

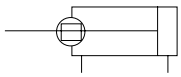

How to Order

AXRK (1) A (2) 20 (3) — 50 (4) — ○ (5) — W5 (6) ○ (7)

1 Type
Non-Rotating/
Direct Pivot

2 Mounting
A : Rear Pilot mounting
B : Front Face mounting

3 Bore Size(mm)
20 : ø20
25 : ø25
32 : ø32
40 : ø40

4 Stroke/mm
※ For Stroke Refer to Page 87.

5 Special Options
Blank : Standard type
XC16 : Copper-free

6 Applicable Auto Switch Reed Switch
(Band mounted type)
〈Grommet〉
Blank : Without Auto Switch
W5 : W5
Standard Lead Length 0.5m
(Up to 3m Optional)

7 Number of Switches
Blank : 2 pcs.
S : 1 pc.
n : n pcs.

PART No. of Auto Switch Mounting Band

Auto Switch Model	Bore size(mm)			
	ø20	ø25	ø32	ø40
W5	TBM2-020	TBM2-025	TBM2-032	TBM2-040

Specifications

Action	Double acting single rod
Fluid	Air
Proof Pressure	15kgf/cm² {1.5MPa}
Max. Operating Pressure	9.9kgf/cm² {1.0MPa}
Min. Operating Pressure	0.5kgf/cm² {0.05MPa}
Ambient and Fluid Temperature	5~60℃
Cushion	Rubber Cushion (Standard)
Stroke Tolerance	$^{+1.4}_{0}$ mm
Non-Rotating Accuracy	ø20, ø25:±0.8°, ø32, ø40:±5°
Mounting	Rear Pivot Mounting, Front Face mounting

Piston Speed

Bore Size(mm)	ø20	ø25	ø32	ø40
Piston Speed	50~750 mm/sec			
Allowable Kinetic Energy(kgf/cm)	2.7	4	6.5	12

Standard stroke

Bore Size(mm)	Standard Stroke(mm)
ø20	25, 50, 75, 100, 125, 150
ø25	25, 50, 75, 100, 125, 150, 200
ø32	25, 50, 75, 100, 125, 150, 200
ø40	25, 50, 75, 100, 125, 150, 200, 250, 300

Auto Switch Specifications

Mounting	Lead Wire Entry	Reed Switch
Band Mounting Type	Grommet	W5

Mounting and Accessories

Accessories / Mounting	Standard	Option	
	Rod End Nut	Single Knuckel Joint	Double Knuckel Joint
Rear Pivot Mounting	●	●	●
Front Nose Mounting	●	●	●

Weight Table

(kgf)

Bore Size(mm)		ø20	ø25	ø32	ø40
Basic Weight	Rear Pivot Mounting	0.14	0.23	0.32	0.63
	Front Nose Mounting	0.14	0.22	0.32	0.62
Additional weight for each 50 of stroke		0.04	0.07	0.09	0.14

Rear Pilot Mounting

AXRKA (Bore Size)—(Stroke)

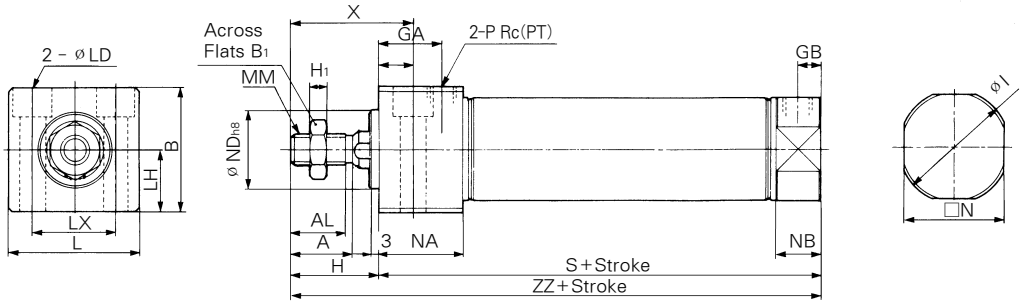

Rod Cross Section

(mm)

Bore size	D	K	Stroke range
ø 20	$10^{-0.01}_{-0.05}$	$8^{-0.01}_{-0.05}$	~150
ø 25	$10^{-0.01}_{-0.05}$	$8^{-0.01}_{-0.05}$	~200
ø 32	$12^{-0.01}_{-0.05}$	$10^{-0.01}_{-0.05}$	~200
ø 40	$16^{-0.01}_{-0.05}$	$14^{-0.01}_{-0.05}$	~300

(mm)

Bore size	A	AL	B	B1	GA	GB	H	H1	I	L	LD	LH	LX	MM	N	NA	NB	ND	P	S	X	Y	ZZ
ø 20	18	15.5	30.3	13	22	8	27	5	27	33.5	ø5.5, ø9.5C-BORE Dp6.5	15	21	M8×1.25	24	29	15	$20^{-0}_{-0.033}$	1/8	76	39	12	103
ø 25	22	19.5	36.3	17	22	8	31	6	33	39	ø6.6, ø11C-BORE Dp7.5	18	25	M8×1.25	30	29	15	$26^{-0}_{-0.033}$	1/8	76	43	12	107
ø 32	22	19.5	42.3	17	22	8	31	6	37.5	47	ø9, ø14C-BORE Dp10	21	30	M10×1.25	34.5	29	15	$26^{-0}_{-0.033}$	1/8	78	43	12	109
ø 40	24	21	52.3	22	27	11	34	8	46.5	58.5	ø11, ø17.5C-BORE Dp12.5	26	38	M14×1.5	42.5	37.5	21.5	$32^{-0}_{-0.039}$	1/4	104	49	15	138

Front Face Mounting

AXRKB (Bore Size)—(Stroke)

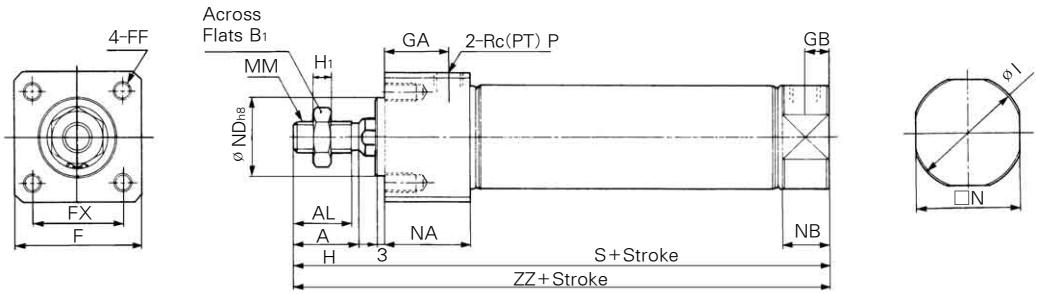

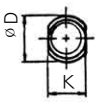

Rod Cross Section

(mm)

Bore size	D	K	Stroke range
ø 20	$10^{-0.01}_{-0.05}$	$8^{-0.01}_{-0.05}$	~150
ø 25	$10^{-0.01}_{-0.05}$	$8^{-0.01}_{-0.05}$	~200
ø 32	$12^{-0.01}_{-0.05}$	$10^{-0.01}_{-0.05}$	~200
ø 40	$16^{-0.01}_{-0.05}$	$14^{-0.01}_{-0.05}$	~300

(mm)

Bore size	A	AL	B1	F	FF	FX	GA	GB	H	H1	I	MM	N	NA	NB	ND	P	S	ZZ
ø 20	18	15.5	13	30.4	M5×0.8Dp9	22	22	8	27	5	27	M8×1.25	24	29	15	$20^{-0}_{-0.033}$	1/8	76	103
ø 25	22	19.5	17	36.4	M6×1Dp11	26	22	8	31	6	33	M8×1.25	30	29	15	$26^{-0}_{-0.033}$	1/8	76	107
ø 32	22	19.5	17	42.4	M6×1Dp11	30	22	8	31	6	37.5	M10×1.25	34.5	29	15	$26^{-0}_{-0.033}$	1/8	78	109
ø 40	24	21	22	52.4	M8×1.25Dp14	36	27	11	34	8	46.5	M14×1.5	42.5	37.5	21.5	$32^{-0}_{-0.039}$	1/4	104	138

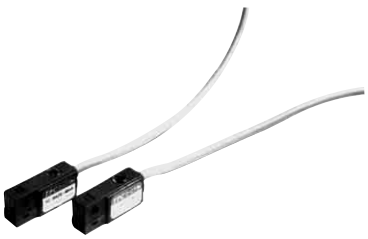

Specifications W5 Type(With indicator lamp)

Auto Switch Model	W5	
Application	Relay, Sequence Control	
Load Voltage	DC24V	AC110V
Max. Load Current/Range of Load Current	5~40mA	5~20mA
Protection Circuit for Contact Breaker Point	None	
Internal Voltage Drop	2.4V or less	
Indicator Lamp	ON:Red light emitting diode	

- Leakage Current – None
- Response Time – 1.2ms
- Lead Wire – Oil proof vinyl, ø3.4 0.2㎟, 2 Wire(red, black), 0.5m(18in)
- Impact Resistance– 30G
- Insulation Resistance – 50MΩ or more under the test voltage 500VDC (Between case and cable)
- Withstand Voltage – 1500VAC 1min (between case and cable)
- Ambient Temperature – 14~140˚F (-10~60℃)
- Protection Structure – IEC spec IP67, Water-proof(JISCO920), oil-proof.

※ If 3m lead wire is required, L is put at the end of numbers.
Example : W5L

Auto Switch/Internal Circuit

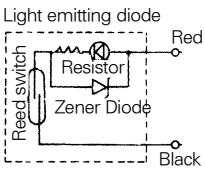

Auto Switch Dimensions (mm)

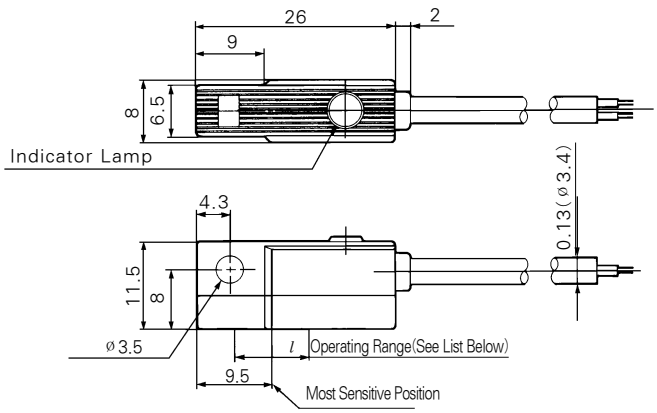

Operating Range(l Dimension) (mm)

Series	Bore size			
	ø20	ø25	ø32	ø40
AX	7	8	8	8

Series AS

Standard Type/Double Acting, Single Acting : Single Rod

Bore Size : ø20, ø25, ø30, ø40

- SUPERIOR LIFE
- POSITION SENSORS
- CORROSION RESISTANT ALUMINUM

Symbol

Double Acting

Sigle Acting

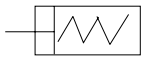

(Spring Extended type)

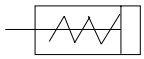

(Spring Return type)

How to Order

AS	L	N	25	—	100	CJ	—	W5	
1	2	3	4		5	6		7	8

1 Air Cylinder
Standard(Built-in magnet)

2 Mounting
- B : Basic
- L : Foot Mount
- F : Front flange
- G : Rear flange
- C : Single clevis
- D : Double clevis
- T : Rear trunnion
- U : Front trunnion

3 Type
- Blank : Lubricated
- N : Non-lube
- H : Air-hydro
- A : Air-cushion (Non-lube type standard)

4 Bore Size (mm)
- 20 : ø20
- 25 : ø25
- 30 : ø32
- 40 : ø40

5 Stroke/mm (Double Acting)

Type	Bore Size (mm)	Standard Stroke (mm)
Double Acting	20, 25 30, 40	25, 50, 75, 100, 125 150, 200, 250, 300
Single Acting	20, 25	25, 50, 75, 100, 125, 150
	30	25, 50, 75, 100, 125, 150, 200
	40	50, 75, 100, 125, 150, 200, 250

※ Long stroke for double acting : 301 or more

6 Suffix Symbol for Cylinder
- Rod Boot J : Nylon tarpaulin
- K : Neoprene cloth
- Action T : Single(Extended)
- S : Single(Return type)
- Cushion C : Rubber cushion

※ Single acting type cannot be accepted
★ Suffix in alphabetical sequence when more than two symbols are required.

7 Applicable Auto switch
- Blank : Without Auto Switch
- W5 : W5(AC110V,DC24V)

※ lead wire of 0.5m(Standard)
Please suffix L at the end for lead wire of 3m(Option)
(Example) W5 - W5L

8 Number of switches
- Blank : 2 pcs
- S : 1 pc
- 3 : 3 pcs
- n : n pcs

Base Material And Surface Treatment

Description		Material	Surface treatment Anodised
Rod cover		Aluminum alloy	Hard black alumite
Cylinder tube		Aluminum alloy	Hard alumite
Seal area	Lube	NBR	O ring
	Non-lube	NBR	DRP(NSD)
	Air-hydro	NBR	HDU, SDA
Piston rod		Carbon steel	Hard chrome plated
Piston		Aluminum alloy	Chromate

Model

Model	Type	Action	Cushion			Seal
			None	Rubber	Air	
AS	Lubricated	Double	●	●	-	O-ring
		Single	●	-	-	
AS○N	Non-lube	Double	●	●	●	Special
		Single	●	-	-	
AS○H	Air-hydro	Double	●	-	-	Special

Specifications

Type		Lubricated, Non-lube	Air-hydro
Medium		Air	L.P Oil
Proof pressure		15kgf/㎠{1.47MPa}	
Max. operating pressure		9.9kgf/㎠{0.97MPa}	
Min.Operating Pressure	Double acting	0.5kgf/㎠{0.05MPa}	1.8kgf/㎠{0.18MPa}
	Single acting	1.8kgf/㎠{180kPa}	-
Ambient and fluid temperature		5~60℃	
Piston speed		50~500 ㎜/s	0.5~300 ㎜/s
Cushion		None(Rubber Cushion, Air Cushion Optional)	
Stroke tolerance (mm)		~250st : $^{+1.0}_{0}$, 251~500st : $^{+1.4}_{0}$	
Mounting		Basic, Foot, Front flange, Rear flange, Single clevis, Double clevis, Rear trunnion, Front trunnion	

Parts No. of Mounting Bracket

Bore Size (mm)	20	25	30	40
Foot	TCML20	TCML30	TCML30	TCML40
Flange	TCMF20	TCMF30	TCMF30	TCMF40
Single clevis	TCMC20	TCMC30	TCMC30	TCMC40
Double clevis	TCMD20	TCMD30	TCMD30	TCMD40
Trunnion	TCMT20	TCMT30	TCMT30	TCMT40

Rod Boot/Material

Model	Material	Max. ambient temperature
J	Nylon tarpaulin	60℃
K	Neoprene Cloth	※110℃

※For itself

With Air Cushion Type/AS ○ A

Built-in air cushion mechanism in both end covers can absorb shock at high loads and velocity, giving little or no ambient vibration and resulting in long cylinder life.

Cushion

Bore Size(mm)	Effective length(mm)	Cross sectional area(cm^2)	Kinetic energy absorption(kgf-cm)
ø20	11	2.01	4.9
ø25	11	3.37	7.7
ø30	10	5.53	10.8
ø40	12.3	9.42	25

※Dimensions and mounting band : Same as Series AS/Double acting type.

Weight/Double Acting

(kgf)

Bore size (mm)		20	25	30	40
Basic Weight	Basic	0.18	0.26	0.30	0.72
	Foot	0.29	0.38	0.42	0.92
	Flange	0.20	0.30	0.34	0.77
	Single clevis	0.20	0.29	0.32	0.76
	Double clevis	0.20	0.29	0.33	0.77
	Trunnion	0.20	0.31	0.34	0.76
	Additional weight for each 50 of stroke	0.06	0.08	0.09	0.15
Metal accessories	Single knuckle Joint	0.06	0.06	0.06	0.23
	Double knuckle Joint(With pin)	0.07	0.07	0.07	0.20

Example

ASL30-100

- Basic weight ····· 0.42(Foot · ø30)
- Additional weight ····· 0.09/50st
- Stroke ····· 100st

0.42+0.09×100/50=0.6kgf

Weight/Single Acting (kgf)

Bore size (mm)		ø20	ø25	ø30	ø40
Basic Weight	25st	0.23	0.33	0.41	0.92
	50st	0.30	0.43	0.54	1.00
	75st	0.39	0.55	0.68	1.17
	100st	0.47	0.65	0.85	1.37
	125st	0.56	0.73	0.98	1.61
	150st	0.65	0.82	1.12	1.81
	200st	-	-	1.40	2.19
	250st	-	-	-	2.52
Mounting metals Weight	Foot	0.15	0.16	0.16	0.31
	Flange	0.06	0.08	0.08	0.17
	Single clevis	0.06	0.06	0.06	0.15
	Double clevis	0.06	0.07	0.07	0.16
	Trunnion	0.06	0.08	0.08	0.15
Acces-sories	Single knuckle Joint	0.06	0.06	0.06	0.23
	Double knuckle Joint(With Pin)	0.07	0.07	0.07	0.20

Example

ASL30-100S

(Basic weight) 0.85+(Mounting weight) 0.16=1.01kgf

Precautions

❶ When mounting, completely flush the piping and be careful that dust and chips do not enter the cylinder.
❷ Load of piston rod should always be aligned parallel with the cylinder axis.
❸ Avoid damage (scratches, nicks) to the piston rod, that lead to damage of rod seal, resulting air leakage.
❹ When disassembling, hold one head cover on the flats in avise while gripping the opposite cover on the flats with a spanner and turning conterclockwise.

〈Lube Type〉
❺ Lubrication : Use non-additive turbine oil ISO-VG32. Never use machine oil or spindle oil.

〈Air-Hydro Type〉
❻ L.P. Oil : Use ISO VG22-46 or equivalent L.P. Oil. Never use machine oil spindle oil.
❼ Air contamination : When lubricating, be careful not to let any air in, Since L.P. Oil Type is not equipped with air exhaust valve, air should be let out beforehand, loosening of the fitting screwed into piping porets.

Double Acting/Basic Type(ASB)

Lube Type(ASB), Non-Lube Type(ASBN), Air-Hydro Type(ASBH)

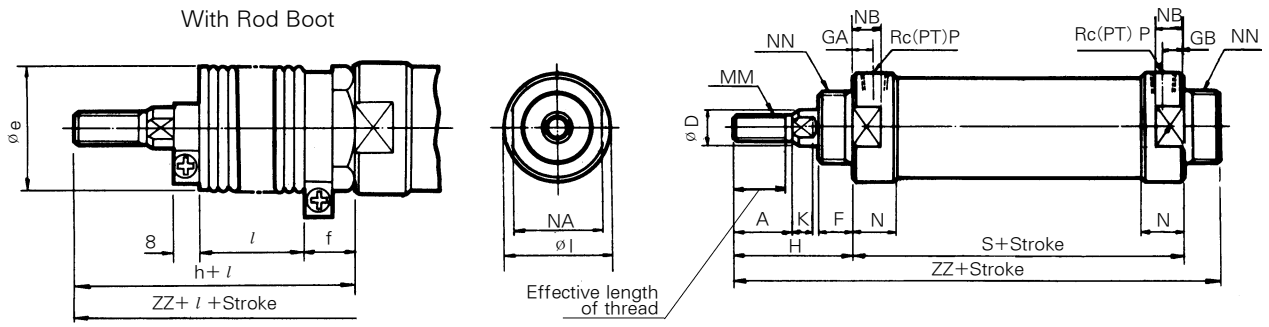

(mm)

Bore size (mm)	Stroke range (mm)	Effective length of thread	A	ø D	F	GA	GB	øI	K	MM	N	NA	NB	NN	P Rc(PT)	S
ø20	~300	15.5	18	10	13	8	8	28	5.0	M8×1.25	15	24	13	M20×1.5	1/8	62
ø25	~300	19.5	22	12	13	8	8	34	5.5	M10×1.25	15	30	13	M26×1.5	1/8	62
ø30	~300	19.5	22	12	13	8	8	38	5.5	M10×1.25	15	32	13	M26×1.5	1/8	64
ø40	~300	21.0	24	16	16	11	11	50	7.5	M14×1.5	21	46	19	M32×2.0	1/4	88

Bore size (mm)	Without Rod Boot		With Rod Boot				
	H	ZZ	ø e	f	h	l	ZZ
ø20	41	116	36	14	56	0.3 Stroke+3	131
ø25	45	120	36	14	60		135
ø30	45	122	36	14	60		137
ø40	50	154	40	16	67	0.25 Stroke+3	171

With Rubber Cushion

Without Rod Boot		With Rod Boot
S	ZZ	ZZ
68	122	137
68	126	141
70	128	143
94	160	177

※ Minimum stroke with : 20㎜ or more

Single Acting/Basic Type

Lube Type(ASB), Non-Lube Type(ASBN)

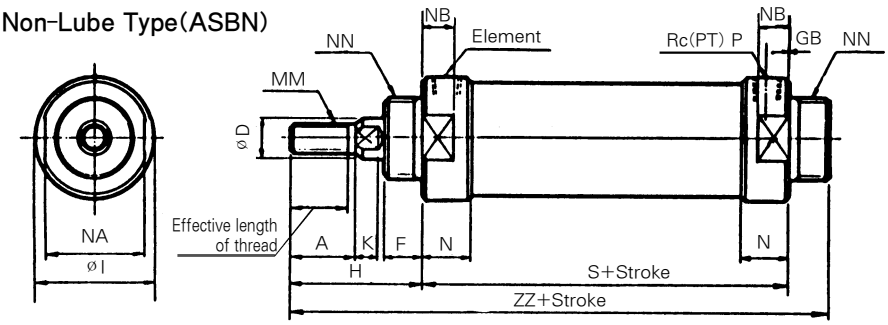

(mm)

Bore size (mm)	Stroke range (mm)	Effective length thread	A	ø D	F	GB	I	K	MM	N	NA	NB	NN	P	H
ø20	~150	15.5	18	10	13	8	28	5	M8×1.25	15	24	13	M20×1.5	1/8	41
ø25	~150	19.5	22	12	13	8	34	5.5	M10×1.25	15	30	13	M26×1.5	1/8	45
ø30	~200	19.5	22	12	13	8	38	5.5	M10×1.25	15	32	13	M26×1.5	1/8	45
ø40	~250	21.0	24	16	16	11	50	7.5	M14×1.5	21	46	19	M32×20	1/4	50

Bore size (mm)	1~25ST		26~50ST		51~75ST		76~100ST		101~125ST		126~150ST		151~200ST		201~250ST	
	S	ZZ	S	ZZ	S	ZZ	S	ZZ	S	ZZ	S	ZZ	S	ZZ	S	ZZ
ø20	84	138	102	156	126	180	144	198	169	223	194	248	-	-	-	-
ø25	82	140	97	155	119	177	134	192	144	202	159	217	-	-	-	-
ø30	87	145	104	162	124	182	150	208	167	225	187	245	227	285	-	-
ø40	123	189	123	189	136	202	153	219	174	240	191	257	221	287	246	312

Double Acting (Foot/ASL○)

Lube Type(ASL), Non-Lube Type(ASLN),
Air-Hydro Type(ASLH)

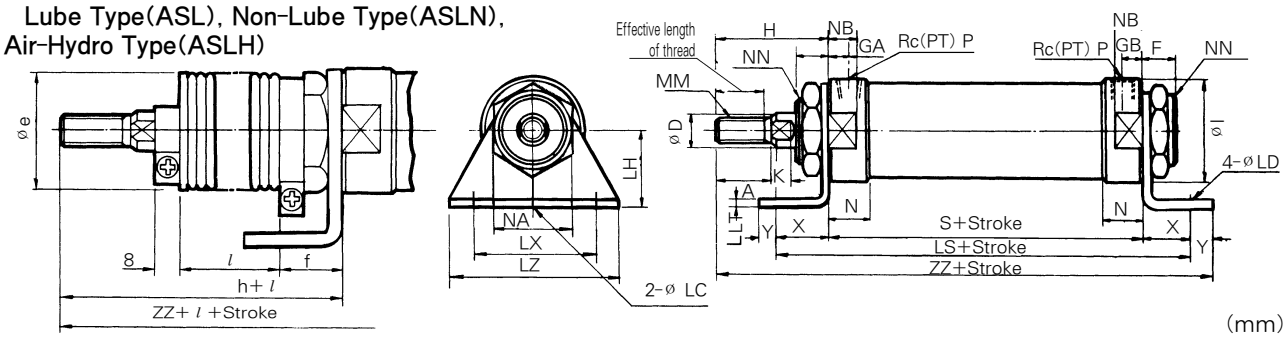

(mm)

Bore size (mm)	★Stroke range (mm)	Effective length thread	A	ø D	F	GA	GB	ø I	K	MM	N	NA	NB	NN	P	S
ø20	~400	15.5	18	10	13	8	8	28	5.0	M8×1.25	15	24	13	M20×1.5	1/8	62
ø25	~450	19.5	22	12	13	8	8	34	5.5	M10×1.25	15	30	13	M26×1.5	1/8	62
ø30	~450	19.5	22	12	13	8	8	38	5.5	M10×1.25	15	32	13	M26×1.5	1/8	64
ø40	~500	21.0	24	16	16	11	11	50	7.5	M14×1.5	21	46	19	M32×2.0	1/4	88

※ Minimum stroke with Rod Boot : 20㎜ or more.
★ Long stroke : 301㎜ or more.

Bore size (mm)	X	Y	LC	LD	LH	LS	LT	LX	L	Without Rod Boot		With Rod Boot				
										H	ZZ	ø e	f	h	l	ZZ
ø20	20	8	4	6.8	25	102	3.2	40	55	41	131	36	17.2	56		146
ø25	20	8	4	6.8	28	102	3.2	40	55	45	135	36	17.2	60	0.3Stroke+3	150
ø30	20	8	4	6.8	28	104	3.2	40	55	45	137	36	17.2	60		152
ø40	23	12	4	7.0	30	134	3.2	55	75	50	173	40	19.2	67	0.25 Stroke+3	190

With Rubber Cushion

Without Rod Boot			With Rod Boot
S	LS	ZZ	ZZ
68	108	137	152
68	108	141	156
70	110	143	158
94	140	179	190

Double Acting (Front Flange Type/ASF○)

Lube Type(ASF), Non-Lube Type(ASFN), Air-Hydro Type(ASFH)

With Galler

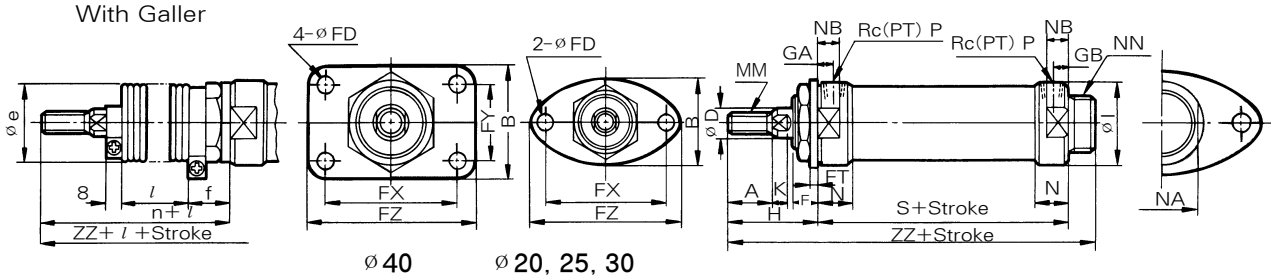

ø40 ø20, 25, 30

(mm)

Bore size (mm)	*Stroke range (mm)	Effective length thread	A	B	ø D	F	GA	GB	ø I	K	MM	N	NA	NB	NN	P	S
ø20	~400	15.5	18	40	10	13	8	8	28	5.0	M8×1.25	15	24	13	M20×1.5	1/8	62
ø25	~450	19.5	22	42	12	13	8	8	34	5.5	M10×1.25	15	30	13	M26×1.5	1/8	62
ø30	~450	19.5	22	42	12	13	8	8	38	5.5	M10×1.25	15	32	13	M26×1.5	1/8	64
ø40	~500	21.0	24	52	16	16	11	11	50	7.5	M14×1.5	21	46	19	M32×2.0	1/4	88

Bore size (mm)	ø FD	FT	FX	FY	FZ	Without Rod Boot		With Rod Boot				
						H	ZZ	ø e	f	h	l	ZZ
ø20	7	3.2	60	-	75	41	116	36	17.2	56	0.3 Stroke+3	131
ø25	7	4.5	60	-	75	45	120	36	18.5	60		135
ø30	7	4.5	60	-	75	45	122	36	18.5	60		137
ø40	7	4.5	66	36	82	50	154	40	20.5	67	0.25 Stroke+3	171

With Rubber Cushion

Without Rod Boot		WithRod Boot
S	ZZ	ZZ
68	122	137
68	126	141
70	128	143
94	160	177

※ Minimum stroke with Rod Boot : 20㎜ or more.
★ Long stroke : 301 or more.

Double Acting(Rear Flange Type/ASG○)

Lube Type(ASG), Non-Lube Type(ASGN), Air - Hydro Type(ASGH)

With Rod Boot

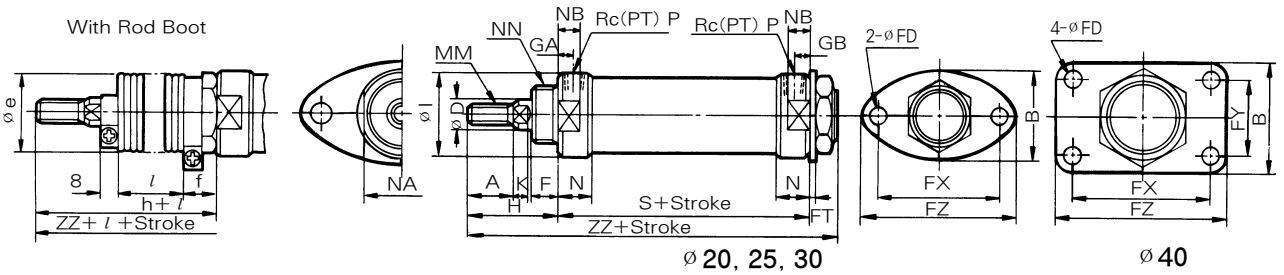

ø20, 25, 30 ø40

(mm)

Bore Size (mm)	Stroke range (mm)	Effective length thread	A	B	ø D	F	GA	GB	ø I	K	MM	N	NA	NB	NN	P	S
ø20	~300	15.5	18	40	10	13	8	8	28	5.0	M8×1.25	15	24	13	M20×1.5	1/8	62
ø25	~300	19.5	22	42	12	13	8	8	34	5.5	M10×1.25	15	30	13	M26×1.5	1/8	62
ø30	~300	19.5	22	42	12	13	8	8	38	5.5	M10×1.25	15	32	13	M26×1.5	1/8	64
ø40	~300	21.0	24	52	16	16	11	11	50	7.5	M14×1.5	21	46	19	M32×2.0	1/4	88

Bore size (mm)	ø FD	FT	FX	FY	FZ	Without Rod Boot		With Rod Boot				
						H	ZZ	ø e	f	h	l	ZZ
ø20	7	3.2	60	-	75	41	116	36	14	56	0.3 Stroke+3	131
ø25	7	4.5	60	-	75	45	120	36	14	60		135
ø30	7	4.5	60	-	75	45	122	36	14	60		137
ø40	7	4.5	66	36	82	50	154	40	16	67	0.25 Stroke+3	171

With Rubber Cushion

Without Rod Boot		With Rod Boot
S	ZZ	ZZ
68	122	137
68	126	141
70	128	143
94	160	177

Double Acting (Single Clevis Type/ASC○)

Lube Type(ASC), Non-Lube Tyep(ASCN), Air-Hydro Type(ASCH)

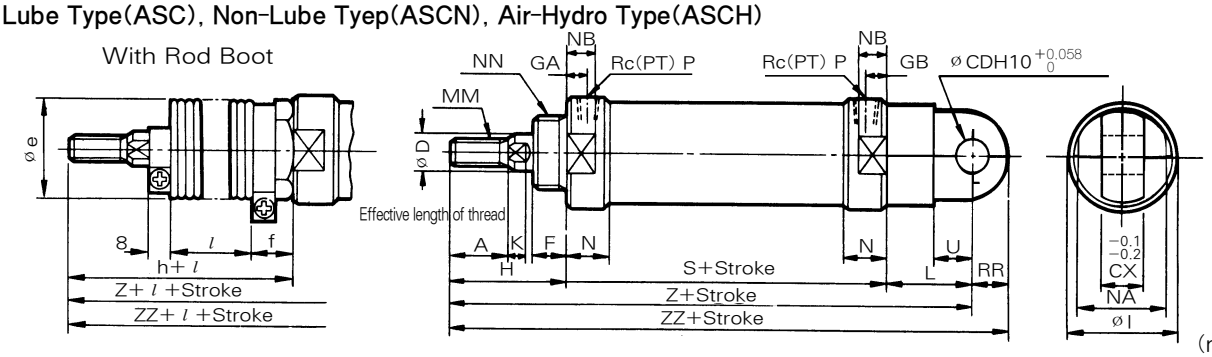

(mm)

Bore size (mm)	Stroke range (mm)	Effective length of thread	A	ØD	F	GA	GB	ØI	K	L	MM	N	NA	NB	NN	P	S
Ø20	~300	15.5	18	10	13	8	8	28	5.0	30	M8×1.25	15	24	13	M20×1.5	1/8	62
Ø25	~300	19.5	22	12	13	8	8	34	5.5	30	M10×1.25	15	30	13	M26×1.5	1/8	62
Ø30	~300	19.5	22	12	13	8	8	38	5.5	30	M10×1.25	15	32	13	M26×1.5	1/8	64
Ø40	~300	21.0	24	16	16	11	11	50	7.5	39	M14×1.5	21	46	19	M32×2.0	1/4	88

Bore size (mm)	U	ØCD	CX	RR	Without Rod Boot			With Rod Boot					
					H	Z	ZZ	Ø e	f	h	l	Z	ZZ
Ø20	14	9	10	9	41	133	142	36	14	56	0.3 Stroke+3	148	157
Ø25	14	9	10	9	45	137	146	36	14	60		152	161
Ø30	14	9	10	9	45	139	148	36	14	60		154	163
Ø40	18	10	15	11	50	177	188	40	16	67	0.25Stroke+3	194	205

※ Minium stroke with Rod Boot : 20㎜ or more.

With Rubber Cushion

Without Rod Boot			With Rod Boot	
S	Z	ZZ	Z	ZZ
68	139	148	154	163
68	143	152	158	167
70	145	154	160	169
94	183	194	200	211

Double Acting(Double Clevis Type/ASD○)

Lube Type(ASD), Non-Lube Type(ASDN), Air-Hydro Type(ASDH)

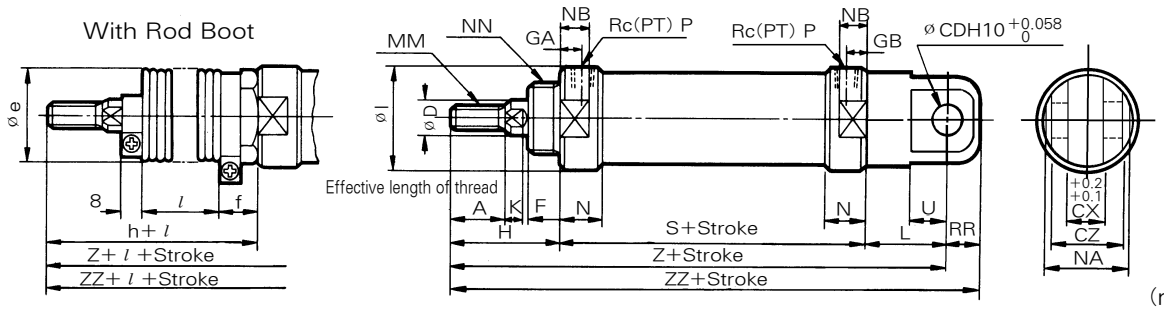

(mm)

Bore size (mm)	Stroke range (mm)	Effective length of thread	A	ØD	F	GA	GB	ØI	K	L	MM	N	NA	NB	NN	P	S
Ø20	~300	15.5	18	10	13	8	8	28	5.0	30	M8×1.25	15	24	13	M20×1.5	1/8	62
Ø25	~300	19.5	22	12	13	8	8	34	5.5	30	M10×1.25	15	30	13	M26×1.5	1/8	62
Ø30	~300	19.5	22	12	13	8	8	38	5.5	30	M10×1.25	15	32	13	M26×1.5	1/8	64
Ø40	~300	21.0	24	16	16	11	11	50	7.5	39	M14×1.5	21	46	19	M32×2.0	1/4	88

※ ※ Minium stroke with Rod Boot : 20㎜ or more.

Bore size (mm)	U	ØCD	CX	CZ	RR	Without Rod Boot			With Rod Boot					
						H	Z	ZZ	Ø e	f	h	l	Z	ZZ
Ø20	14	9	10	19	9	41	133	142	36	14	56	0.3 Stroke+3	148	157
Ø25	14	9	10	19	9	45	137	146	36	14	60		152	161
Ø30	14	9	10	19	9	45	139	148	36	14	60		154	163
Ø40	18	10	15	30	11	50	177	188	40	16	67	0.25 Stroke+3	194	205

With Rubber Cushion

Without Rod Boot			With Rod Boot	
S	Z	ZZ	Z	ZZ
68	139	148	154	163
68	143	152	158	167
70	145	154	160	169
94	183	194	200	211

Double Acting (Rear Trunnion/AST○)

Lube Type(AST), Non-Lube Type(ASTN), Air-Hydro Type(ASTH)

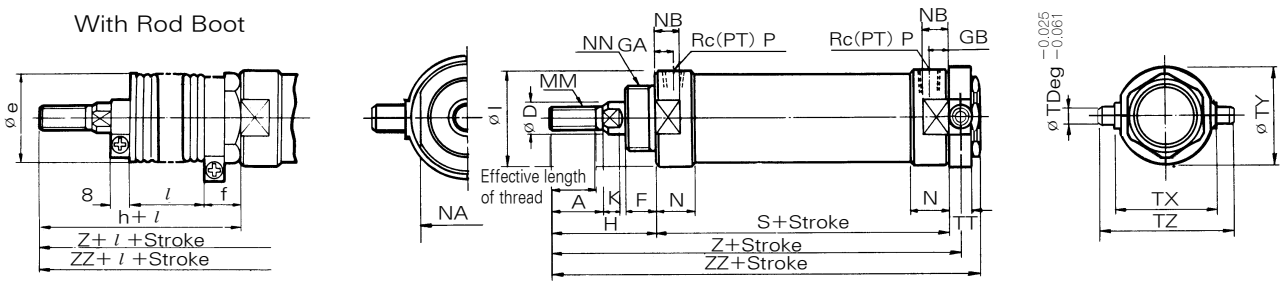

(mm)

Bore size (mm)	Stroke range (mm)	Effective length of thread	A	ø D	F	GA	GB	ø I	K	MM	N	NA	NB	NN	P	S
ø20	~300	15.5	18	10	13	8	8	28	5.0	M8×1.25	15	24	13	M20×1.5	1/8	62
ø25	~300	19.5	22	12	13	8	8	34	5.5	M10×1.25	15	30	13	M26×1.5	1/8	62
ø30	~300	19.5	22	12	13	8	8	38	5.5	M10×1.25	15	32	13	M26×1.5	1/8	64
ø40	~300	21.0	24	16	16	11	11	50	7.5	M14×1.5	21	46	19	M32×2.0	1/4	88

Bore size (mm)	ø TD	TT	TX	ø TY	TZ	Without Rod Boot			With Rod Boot					
						H	Z	ZZ	ø e	f	h	l	Z	ZZ
ø20	8	10	32	32	52	41	108.0	118	36	14	56	0.3 Stroke+3	123.0	133
ø25	9	10	40	40	60	45	112.0	122	36	14	60		127.0	137
ø30	9	10	40	40	60	45	114.0	124	36	14	60		129.0	139
ø40	10	11	53	53	77	50	143.5	154	40	16	67	0.25Stroke+3	160.5	171

With Rubber Cushion

S	Z	ZZ
68	114	124
68	118	128
70	120	130
94	169.5	160

Double Acting (Front Trunnion/ASU○)

Lube Type(ASU), Non-Lube Type(ASUN), Air-Hydro Type(ASUH)

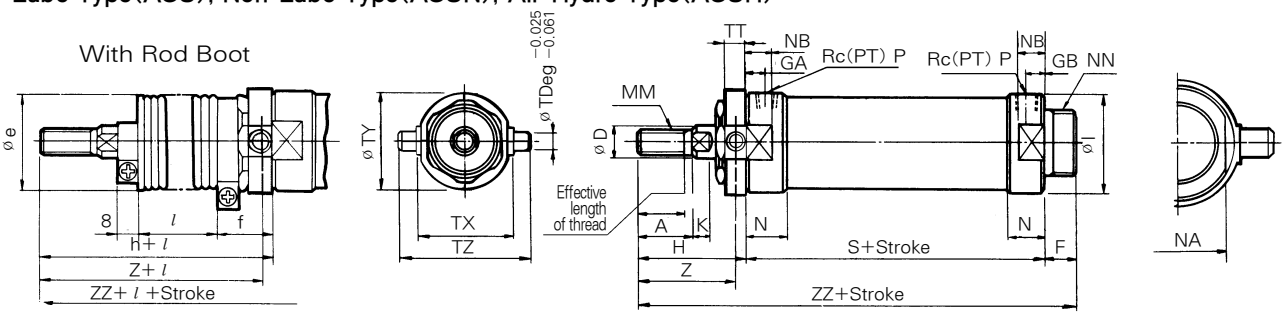

(mm)

Bore size (mm)	Stroke range (mm)	Effective length of thread	A	ø D	F	GA	GB	ø I	K	MM	N	NA	NB	NN	P	S
ø20	~300	15.5	18	10	13	8	8	28	5.0	M8×1.25	15	24	13	M20×1.5	1/8	62
ø25	~300	19.5	22	12	13	8	8	34	5.5	M10×1.25	15	30	13	M26×1.5	1/8	62
ø30	~300	19.5	22	12	13	8	8	38	5.5	M10×1.25	15	32	13	M26×1.5	1/8	64
ø40	~300	21.0	24	16	16	11	11	50	7.5	M14×1.5	21	46	19	M32×2.0	1/4	88

Bore size (mm)	ø TD	TT	TX	ø TY	TZ	Without Rod Boot			With Rod Boot					
						H	Z	ZZ	ø e	f	h	l	Z	ZZ
ø20	8	10	32	32	52	41	36	116	36	21	56	0.3 Stroke+3	51.0	131
ø25	9	10	40	40	60	45	40	120	36	21	60		55.0	135
ø30	9	10	40	40	60	45	40	122	36	21	60		55.0	137
ø40	10	11	53	53	77	50	44.5	154	40	24	67	0.25Stroke+3	61.5	171

With Rubber Cushion

S	Z	ZZ
68	36	122
68	40	126
70	40	128
94	44.5	160

(mm)

I Type Single Knuckle Joint

TI-02 · TI-03
Material : Rolled steel sheet

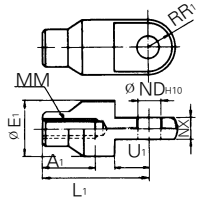

TI-04
Material : Free cutting sulfur steel

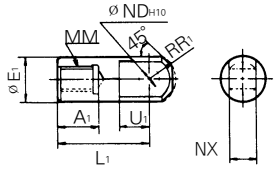

Parts No.	Applicable bore size(mm)	A1	E1	L1	MM	R1	U1	ØND H10	NX
TI-02	20	16	20	36	M8×1.25	10	14	$9^{+0.058}_{0}$	$9^{-0.1}_{-0.2}$
TI-03	20 · 30	18	20	38	M10×1.25	10	14	$9^{+0.058}_{0}$	$9^{-0.1}_{-0.2}$
TI-04	40	22	24	55	M14×1.5	15.5	20	$12^{+0.070}_{0}$	$16^{-0.1}_{-0.3}$

Y Type Double Knuckle Joint

TY-02A, TY-03A
Material : Rolled steel sheet

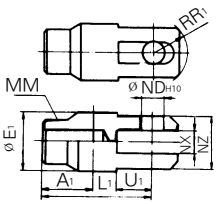

TY-04A
Material : Castiron

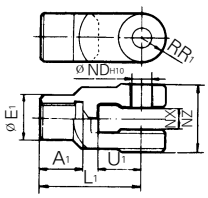

Parts No.	Applicable bore size(mm)	A1	E1	L1	MM	R1	U1	ØND H10	NX	NZ
TY-02A	20	16	20	36	M8×1.25	12	14	$9^{+0.058}_{0}$	$9^{+0.2}_{+0.1}$	18
TY-03A	20 · 30	18	20	38	M10×1.25	12	14	$9^{+0.058}_{0}$	$9^{+0.2}_{+0.1}$	18
TY-04A	40	22	24	55	M14×1.5	13	25	$12^{+0.070}_{0}$	$16^{+0.3}_{+0.1}$	38

Pin For Clevis-Pin For Knuckle

Applicable : Ø20, Ø25, Ø30

TCDP-1
Material : Carbon steel

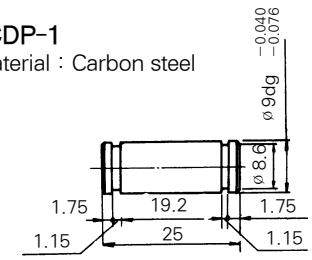

Retaining ring : C-9 type for pivot

Applicable : Ø40(1.58)

TCDP-2
(for Clevis)
Material : Carbon steel

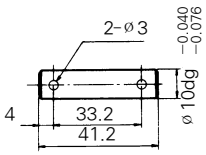

Applicable split pin : ø3×18 *l*

TCDP-3
(for Knuckle)
Material : Carbon steel

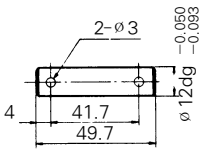

Applicable split pin : ø3×18 *l*

Mounting Nut(trunnion type only)

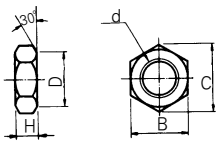

Material : rolled steel

Part No.	Applicable bore size(mm)	d	H	B	C	D
TSN-T02	20	M20×1.5	10	26	28	26
TSN-T03	20 · 30	M26×1.5	10	32	34	32
TSN-T04	40	M32×2.0	10	41	45	41

Mounting Nut

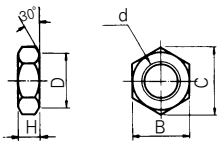

Material : Carbon steel

Part No.	Applicable bore size(mm)	d	H	B	C	D
TSN-02	20	M20×1.5	9	26	30	25
TSN-03	25 · 30	M26×1.5	8	32	37	31
TSN-04	40	M32×2.0	11	41	47.3	39

Rod End Nut

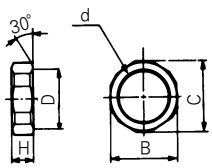

Material : rolled steel

Part No.	Applicable bore size(mm)	d	H	B	C	D
TNT-02	20	M8×1.25	5	13	15.0	12.5
TNT-03	25 · 30	M10×1.25	6	17	19.6	16.5
TNT-04	40	M14×1.5	8	22	25.4	21.0

Series ASW

Double Rod Type / Double Acting

Bore Size : ø20, ø25, ø30, ø40

- LONG CYCLE LIFE
- AUTO SWITCH CAN BE MOUNTED TO MONITOR STROKE POSITION
- COMPACT/AFFORDABLE DESIGN
- REPAIRABLE

Symbol

Double acting/Double rod

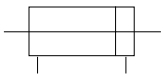

How to Order

AS W L N 25 - 100 JJ - W5 ☐

1 2 3 4 5 6 7 8 9

1 Air Cylinder Standard
(Built-in magnet)

2 Double Rod End Cylinder

3 Mounting
B : Basic
L : Foot
F : Flange
T : Rear Trunnion
U : Front Trunnion

4 Type
Blank : Lube
N : Non-Lube
H : Air-Hydro

5 Bore Size
20 : ø20
25 : ø25
30 : ø30
40 : ø40

6 Stroke(mm)
25,25,30,40:25,50,75
100,125,150,200,250,300

7 Suffix Symbol for Cylinder
C : Rubber Cushion
〈Rod Boot〉
J : Nylon Boot
K : Neoprene Cloth
〈Double〉
JJ : Nylon Boot
KK : Neoprene Cloth

8 Applicable Auto Switch

9 Number of Switches

Weight (kgf)

Bore size		20	25	30	40
Basic weight	Basic	0.20	0.30	0.34	0.80
	Foot	0.32	0.41	0.45	0.99
	Flange	0.23	0.33	0.37	0.84
	Trunnion	0.22	0.34	0.38	0.84
Additional weight for each 2 of stroke		0.09	0.13	0.13	0.24
Metal accessories	Single knuckle joint	0.06	0.06	0.06	0.23
	Double knuckle joint(with pin)	0.07	0.07	0.07	0.20

Example

ASWL30-100

- Basic Weight ····· 0.34(Foot Type · ø30)
- Additional Weight ·····0.13/50st
- Stroke ·····100st

0.45+0.13×100/50=0.71kgf

Basic Type/ASWB

Lube Type(ASWB), Non-Lube Type(ASWBN), Air-Hydro Type(ASWBH)

With Single Rod Boot

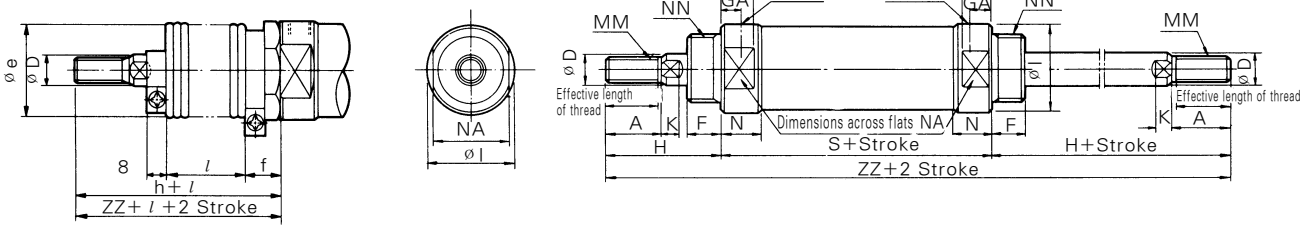

With Double Gaiter

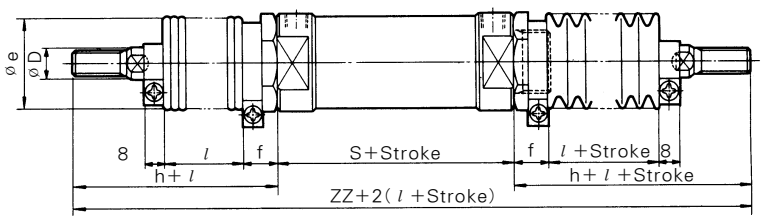

(mm)

Bore size (mm)	Stroke range(mm) Without Rod Boot	Stroke range(mm) With Rod Boot	Effective length of thread	A	ø D	F	GA	ø I	K	MM	N	NA	NB	NN	P	S
ø20	~300	20~300	15.5	18	10	13	8	28	5	M8×1.25	15	24	13	M26×1.5	1/8	62
ø25	~300	20~300	19.5	22	12	13	8	34	5.5	M10×1.25	15	30	13	M26×1.5	1/8	62
ø30	~300	20~300	19.5	22	12	13	8	38	5.5	M10×1.25	15	32	13	M26×1.5	1/8	64
ø40	~300	20~300	21.0	24	16	16	11	50	7.5	M14×1.5	21	46	19	M32×2.0	1/4	88

Bore size (mm)	Without Rod Boot H	Without Rod Boot ZZ	With single Rod Boot e	f	h	l	ZZ	With double Rod Boot ZZ
ø20	41	144	36	14	56	0.3Stroke+3	159	174
ø25	45	152	36	14	60		167	182
ø30	45	154	36	14	60		169	184
ø40	50	188	40	16	67	0.25Stroke+3	205	222

With Rubber Cushion

S	ZZ Without Rod Boot	ZZ With single Rod Boot	ZZ With Double Rod Boot
68	150	165	180
68	158	173	188
70	160	175	190
74	194	211	228

Series ASK

Non-Rotating Rod Type/Double Acting, Single Acting

Non-Lube Type : ø20, ø25, ø30, ø40

- AVAILABLE IN SERIES RANGING FROM ø20 THROUGH ø40
- HIGH NON-ROTATING ACCURACY
  ø20, ø25, ø30: ±0.8°
  ø40: ±0.5°
- LONG LIFE, HIGH SPEED OPERATION POSSIBLE
  Piston speed, 50~500 m/s, is same as standard type.
- AUTO SWITCH CAPABLE

Symbol

Double Acting Single Acting(Spring Return)

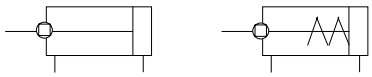

How to Order

AS K L 25 — 100 J — W5 ☐

1 2 3 4 5 6 7 8

1 Air Cylinder
Built-in magnet, Non-Lube Standard

2 Non-Rotating Rod Type

3 Mounting
B : Basic
L : Foot Mount
F : Front Flange
G : Rear Flange
C : Single Clevis
D : Double Clevis
T : Rear Trunnion
U : Front Trunnion

4 Bore Size
20 : ø20
25 : ø25
30 : ø30
40 : ø40

5 Stroke/(mm)

6 Suffix Symbol for Cylinder
(Rod Boot)
J : Nylon Tarpaulin
K : Neoprene Cloth
(Action)
Blank : Double Acting
S : Single Acting
※ Single Acting : unavailable

7 Applicable Auto Switch
Blank : Without Auto Switch (Reed Switch)
W5 : W5L
※ Please suffix L at the end for lead wire of 3m.
(Example) W5 - W5L

8 Number of Switches
Blank : 2 pcs.
S : 1 pc.
3 : 3 pcs.
n : n pcs.

Standard Stroke

Type	Bore Size (mm)	Standard Stroke (mm)
Double Acting	20, 25 30, 40	25, 50, 75, 100, 125 150, 200, 250, 300
Single Acting	20, 25	25, 50, 75, 100, 125, 150
	30	25, 50, 75, 100, 125, 150, 200
	40	50, 75, 100, 125, 150, 200, 250

Specifications

Action	Double Acting	Single Acting(Spring Return)
Medium	Air	
Proof Pressure	15kgf/㎠{1.47MPa}	
Max. Operating Pressure	9.9kgf/㎠{0.97MPa}	
Min. Operating Pressure	0.5kgf/㎠{0.05MPa}	1.8kgf/㎠{0.18MPa}
Ambient and Fluid Temperature	5~60℃	
Piston Speed	50~500 ㎜/s	
Cushion	None	
Stroke Tolerance	~250st : $^{+1.0}_{0}$, 251~300st : $^{+1.4}_{0}$	
Non-Rotating Accuracy	ø20~ø30 : ±0.8°, ø40 :±0.5°	
Mounting	Basic, Foot, Front Flange, Rear Flange, Single Clevis, Double Clevis, Rear Trunnion, Front Trunnion	

Cautions

〈Installation〉

- Avoid applying rotational torque to piston rod in order to prevent deformation of the non-rotation guide.

Allowable rotating torque range for piston rod or less	ø20	ø25	ø30	ø40
	2.0	2.5	2.5	4.5

- Load of piston rod should always be aligned parallel, with the cylinder axis.
- Avoid loading the single acting cylinder rod during retraction.
- Lubrication is not required, however, use non-additive turbine oil ISO VG 32 if lubrication is supplied.

〈Installation piping〉

- Retract the rod fully before applying any kind of tightening torque on the end nut, Prevent torque being transmitted to the guide bushing by holding the rod stationary with a spanner on the flats.
- Flush tubing and fittings completely with clean air before use.
- When disassembling, hold one head cover on the flats with a vise while gripping the opposite cover on the flats with a spanner and turning counterclockwise.
  When re-assembling, tighten by giving an additional turn of 3°~5° from the point where dissembled.

Basic Type/ASKB

Lube Type(ASKB), Non-lube Type(ASKBN), Air-hydro Type(ASKBH)

With Single Rod Boot

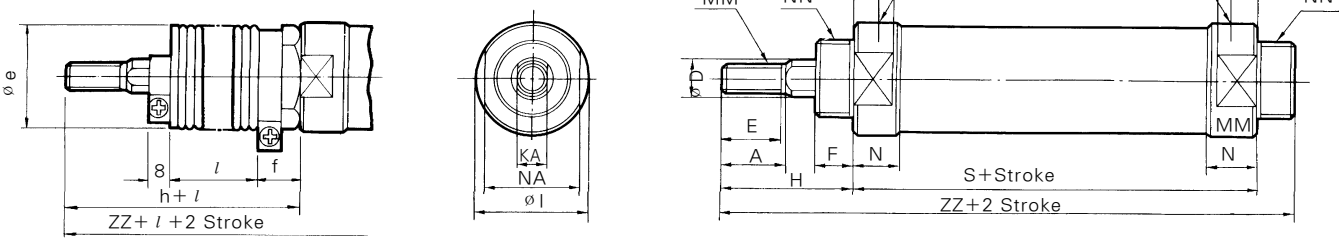

Double Acting

(mm)

Bore size (mm)	Stroke range(mm) Without Rod Boot	Stroke range(mm) With Rod Boot	Effective length of thread E	A	ø D	F	GA	ø I	KA	MM	N	NA	NB	NN	P	S
20	~300	20~300	15.5	18	10	13	8	28	8	M8×1.25	15	24	13	M26×1.5	1/8	62
25	~300	20~300	19.5	22	12	13	8	34	10	M10×1.25	15	30	13	M26×1.5	1/8	62
30	~300	20~300	19.5	22	12	13	8	38	10	M10×1.25	15	32	13	M26×1.5	1/8	64
40	~300	20~300	21.0	24	16	16	11	50	14	M14×1.5	21	46	19	M32×2.0	1/4	88

Bore size (mm)	Without Rod Boot H	Without Rod Boot ZZ	With single Rod Boot ø e	f	h	l	ZZ
20	41	116	36	14	56	0.3Stroke+3	131
25	45	120	36	14	60		135
30	45	122	36	14	60		137
40	50	154	40	16	67	0.25Stroke+3	171

With Rubber Cushion

S	ZZ
68	122
68	126
70	128
94	160

Single Acting

Bore size (mm)	Stroke Range (mm)	A	ø D	F	GB	ø I	KA	MM	N	NA	NB	NN	P	H
20	~150	18	10	13	8	28	8	M8×1.25	15	24	13	M20×1.5	1/8	41
25	~150	22	12	13	8	34	10	M10×1.25	15	30	13	M26×1.5	1/8	45
30	~200	22	12	13	8	38	10	M10×1.25	15	32	13	M26×1.5	1/8	45
40	~250	24	16	16	11	50	14	M14×1.5	21	46	19	M32×2.0	1/4	50

Bore size (mm)	25st S	25st ZZ	50st S	50st ZZ	75st S	75st ZZ	100st S	100st ZZ	125st S	125st ZZ	150st S	150st ZZ	200st S	200st ZZ	250st S	250st ZZ
20	84	138	102	156	126	180	144	198	169	223	194	248	-	-	-	-
25	82	140	97	155	119	177	134	192	144	202	159	217	-	-	-	-
30	87	145	104	162	124	182	150	208	167	225	187	245	227	285	-	-
40	123	189	123	189	136	202	153	219	174	240	191	257	221	287	246	312

Adjustable Stroke Cylinder/Extension Adjustable Type

AS (Mounting) (Type) (Bore size) - (Stroke) (Additional symbol) (Stroke adjusting symbol) - XC8

Additional symbol
- Blank — Without Rod Boot
- J — With Rod Boot(Nylon tarpaulin)
- K — With Rod Boot(Neoprene cloth)

Stroke adjusting symbol
- A — Stroke adjusting range 0~-25mm
- B — Stroke adjusting range 0 ~-50mm

The Stroke at extend of the cylinder can be adjusted by the stopper in the head side from full stroke(0~-25mm) or (0~-50mm).

The cylinder stroke can be variably adjusted.
The stroke adjustment device is fixed at the head side, and the cylinder stroke is adjusted by the stroke on the outlet side.

Symbol

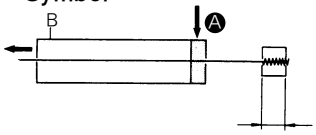

Adjustable range

Construction, Dimensions/Basic Type

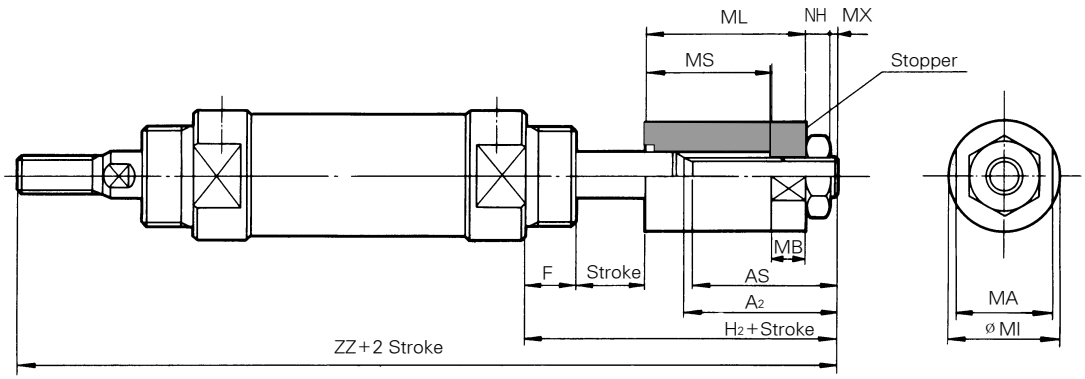

(mm)

Bore size(mm)	A_2	AS	ML	MA	MB	MS	ø MI	NH	MX	H_2	ZZ	stroke range
ø20	44(69)	41.5(66.5)	40(65)	14	9	32(57)	17	5	3	61(86)	164(189)	~300
ø25	45(70)	42.5(67.5)	40(65)	19	11	32(57)	24	6	3	62(87)	169(194)	~300
ø30	45(70)	42.5(67.5)	40(65)	19	11	32(57)	24	6	3	62(87)	171(196)	~300
ø40	51(77)	48(74)	44(70)	27	13	32(58)	30	8	3	71(97)	209(235)	~300

( ) : Stroke Adjusting range!50mm

Adjustable Stroke Cylinder/Extension Adjustable Type

AS (Mounting) (Type) (Bore size) - (Stroke) (Additional symbol) (Stroke adjusting symbol) - XC9

Additional symbol
- Blank — Without Rod Boot
- J — With Rod Boot(Nylon tarpaulin)
- K — With Rod Boot(Neoprene cloth)

Stroke adjusting symbol
- A — Stroke adjusting range 0~-25㎜
- B — Stroke adjusting range 0~-50㎜

The Stroke at retraction of the cylinder can be adjusted from (0~-25㎜) or (0~50 ㎜) by the adjusting bolt.

Symbol

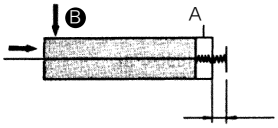

Adjustable range

Construction, Dimensions/Basic Type

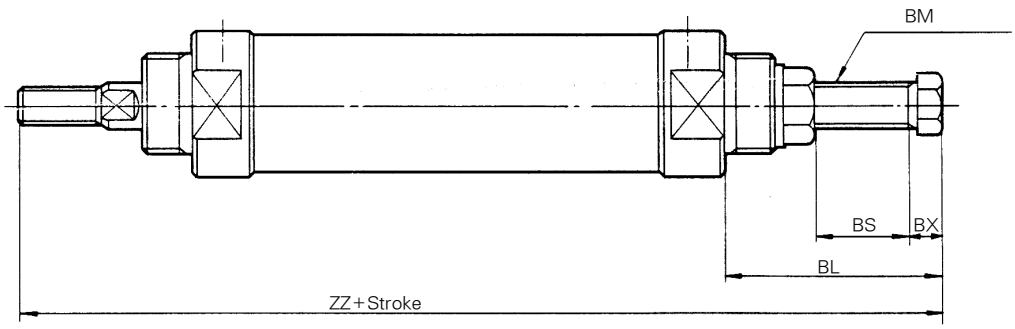

Bore size(㎜)	BS	BM	BX	BL	ZZ
ø20	29	M8×1.25	11	61	164
ø25	33	M8×1.25	11	65	172
ø30	31	M8×1.25	11	63	172
ø40	28	M12×1.75	15	71	209

Dual Stroke Cylinder/Double Rod Type

AS (Mounting) (Type) (Bore size) - (Stroke A) (Additional symbol) + (Stroke B) (Adjusting symbol) - XC10

Additional symbol
- Blank — Without Rod Boot
- J — With Rod Boot(Nylon tarpaulin)
- K — With Rod Boot(Neoprene cloth)

Two cylinders are constructed as one cylinder in a back-to back configuration allowing the cylinder stroke to be controlled in three steps.

Construction, Dimensions/Basic Type

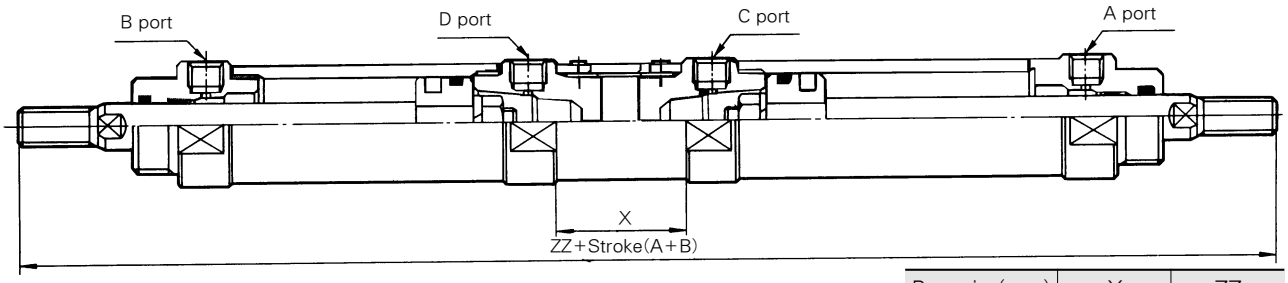

Bore size(mm)	X	ZZ
ø20	28	234
ø25	28	242
ø30	28	246
ø40	34	310

※ Other dimensions are the same as for standard type.

Dual Stroke Cylinder/Single Rod Type

AS (Mounting) (Type) (Bore size) - (Stroke A) + (Stroke B-A) (Adjusting symbol) - XC11

Additional symbol
- Nil — Without Rod Boot
- J — With Rod Boot(Nylon tarpaulin)
- K — With Rod Boot(Neoprene cloth)

Construction, Dimensions/Basic Type

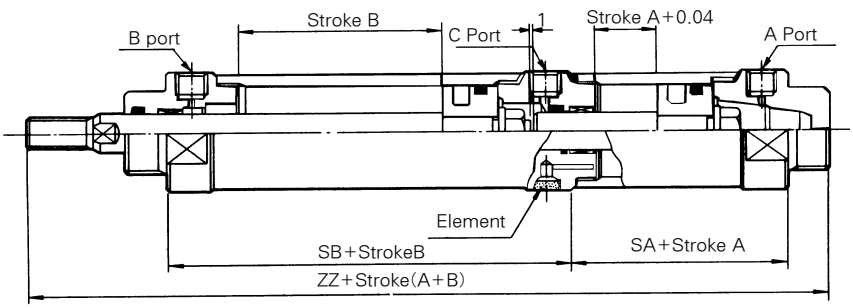

Bore size(mm)	SB	SA	ZZ
ø20	62	48	164
ø25	62	48	168
ø30	64	50	172
ø40	88	50	222

※ Other dimensions are the same as for standard type.

Single Acting Spring Extended

AS (Mounting) (Type) (Bore size) - (Stroke) - T

Specifications

Lube	Lube, Non-lube
Bore size	ø20, ø25, ø30, ø40
Max. operating pressure	9.9kgf/cm²{990kPa}
Min. operating pressure	2.3kgf/cm²{230kPa}
Cushion	None
Action	Spring extended
Mounting	basic type, Axial foot type, Head side, flange type, Single clevis type, Double clevis type, Head side trunnion, Rod side trunnion

High Temperature Cylinder

AS (Mounting) - (Bore size) - (Stroke) - XB6

Use at high temperature up to 150℃

※ Dimensions are the same as for standard type.

Boss Cut

AS (Mounting) (Type) (Bore size) - (Stroke) (Suffix) - XC1

Boss for the head cover bracket is eliminated and the total length of cylinder is shortened.

Specifications

Type	Lube, Non-lube, Air-hydro
Bore size	ø20, ø25, ø30, ø40
Acting	Double, single
Mounting	Basic, Rod side flange, Head side flange

Dimensions

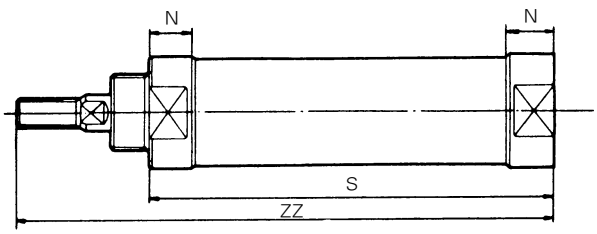

Bore size(mm)	20	25	30	40
ZZ	102	106	108	137
S	61	61	63	87
N	14	14	14	20

※ Other dimensions are the same as for standard type

End Lock Cylinder

AS (Mounting) (Type) (Bore size) - (Stroke) (Suffix) - X105

Specifications

Type	Lube, non-lube
Bore size	ø20, ø25, ø30, ø40
Cushion	None
Action	Double Acting
Retaining force	Max. 20kgf
Lock start pressure	0.5kgf{50kPa}
Lock release pressure	2kgf{200kPa}
Max. operating pressure	9.9kgf{990kPa}

Stainless Steel Rod

AS (Mounting) (Type) (Bore size) - (Stroke) (Suffix) - XC6

Stainless steel piston rod is used to protect in harsh or wet environment.
Auto-switch mounting available.

Specifications

Type	Lube, Non-lube, Air-hydro
Bore size	ø20, ø25, ø30, ø40
Piston rod nut material	Stainless steel

Tandem Air Cylinder

AS (Mounting) (Type) (Bore size) - (Stroke) (Suffix) - XC12

This cylinder is produced with two air cylinders in line allowing double the output force.

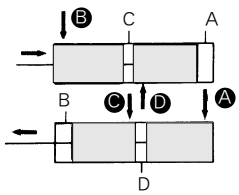

When air pressure is supplied to ports Ⓑ and Ⓓ, the output force is double in the return stroke.
When air pressure is supplied to ports Ⓐ and Ⓒ the output force is double in the return stroke.

Specifications

Lube	Lube, Non-lube
Bore size	ø20, ø25, ø30, ø40
Max. operating pressure	9.9kgf/cm²{990kPa}
Min. operating pressure	0.8kgf/cm²{80kPa}
Cushion	None
Action	Spring extended
Mounting	Basic type, Axial foot type, Head side, flange type, Single clevis type, Double clevis type, Head side trunnion, Rod side trunnion

Series AM

Air Cylinder/Double Acting

Lube · Non-Lube · Air-Hydro Type/ø40, ø50, ø63, ø80, ø100

- BUILT-IN AIR CUSHION
- DESIGNED FOR LONG LIFE & HIGH SPEED
- AVAILABLE FOR THE WIDE STROKE & BORE SIZE

Symbol

Double acting

How To Order

AM L N 50 – 150 ○ – ○ – W3 □

1 2 3 4 5 6 7 8 9

1 Air Cylinder
Standard
(Built-in magnet)

2 Mounting
B : Standard
L : Foot
F : Front flange
G : Rear flange
C : Single clevis
D : Double clevis
T : Center trunnion

3 Type
Blank : Lubricated
N : Non-lube
H : Air-hydro
F : Iron tube (W/O Magnet)

4 Bore Size(mm)
40 : ø40
50 : ø50
63 : ø63
80 : ø80
100 : ø100

5 Stroke/(mm)

6 Rod Boot Option
Rod Boot J : Nylon tarpaulin
K : Neoprene cloth
Cushion Blank : Both end
N : None
H : Head end
R : Rod end

※ Air-hydro type : Standard type is without cushion.
※※ Siffix in alphabetical sequence when symbols more than double.

7 Special Option
Blank : Standard type
XC16 : Copper-free

8 Applicable Auto Switch
Blank : Without Auto Switch
W3 : Reed switch type, W3(AC100,200V,DC 24V)

Standard Auto Switch lead wire length is 0.5m.

※ Please suffix L at the end for lead wire of 3m(Option)
(Example) W3 - W3L

9 Number of Switchs
Blank : 2 pcs.
S : 1 pc.
2 : 2 pcs.
n : n pcs.

Model

Model	Type	Action	Seal
AM	Lubricated	Double	O Ring
AMON	Non-lube		Special
AMOH	Air-hydro		Special

Parts No. Of Mounting Bracket

Bore size	ø40	ø50	ø63	ø80	ø100
※ Foot	TCA2L40	TCA2L50	TCA2L63	TCA2L80	TCA2L100
Flange	TCA2F40	TCA2F50	TCA2F63	TCA2F80	TCA2F100
Single clevis	TCA2C40	TCA2C50	TCA2C63	TCA2C80	TCA2C100
Double clevis	TCA2D40	TCA2D50	TCA2D63	TCA2D80	TCA2D100

※ 2 pcs min for order of only one cylinder.

Specifications

Type	Lube, Non-lube	Air-hydro
Fluid	Air	L.P.Oil
Proof pressure	15kgf/cm²{1.47MPa}	
Max. operating pressure	9.9kgf/cm²{0.97MPa}	
Min. operating pressure	0.5kgf{0.05MPa}	1.0kgf{0.1MPa}
Ambient and fluid temperature	5~60°C	
Piston speed	50~500mm/s	0.5~300mm/s
Cushion	Air Cushion	Not Available
Stroke tolerance	~250st : $^{+1.0}_{0}$,251~1,000st : $^{+1.4}_{0}$, 1,001~1,500st : $^{+1.8}_{0}$	
Mounting	Basic, Foot, Front flange, Rear flange, Single clevis, Double clevis, Center trunnion	

Weight/Aluminum Tube(Iron Tube)

(kgf)

Bore size		ø40	ø50	ø63	ø80	ø100
Basic Weight	Basic	0.89 (0.94)	1.36 (1.40)	2.00 (2.04)	3.48 (3.63)	4.87 (5.07)
	Foot	1.08 (1.13)	1.58 (1.62)	2.34 (2.38)	4.15 (4.30)	5.86 (6.06)
	Flange	1.26 (1.30)	1.81 (1.86)	2.79 (2.84)	4.93 (5.08)	6.79 (6.99)
	Single clevis	1.12 (1.17)	1.70 (1.74)	2.63 (2.67)	4.59 (4.74)	6.65 (6.68)
	Double clevis	1.16 (1.21)	1.79 (1.83)	2.79 (2.83)	4.88 (5.03)	7.17 (7.38)
	Trunnion	1.25 (1.35)	1.84 (1.94)	2.80 (3.00)	5.03 (5.32)	7.15 (7.54)
Additional weight per 2〃 stroke	All mounting bracket (except trunnion iron tube)	0.22 (0.28)	0.28 (0.35)	0.37 (0.43)	0.52 (0.70)	0.65 (0.87)
	Trunnion of iron tube	(0.36)	(0.46)	(0.65)	(0.86)	(1.07)
Accessories	Single knuckle	0.23	0.26	0.26	0.60	0.83
	Double knuckle(with pin)	0.37	0.43	0.43	0.87	1.27

※ In parenthese are for Iron tube type.

Example

AML 40-100(Foot, ø40, 100st)

- Basic weight ····· 1.08kgf
- Additional weight ··· ··· 0.22/50st
- Cylinder stroke ····· 100st

1.08+0.22×100/50=1.52kgf

Accessories

Description \ Mounting		Basic	Foot	Front flange	Rear flange	Single clevis	Double clevis	Center trunnion
Standard	Rod end nut	●	●	●	●	●	●	●
	Clevis pin	–	–	–	–	–	●	–
Option	Single knuckle joing	●	●	●	●	●	●	●
	Double knuckle joint(with pin)	●	●	●	●	●	●	●
	Gaiter	●	●	●	●	●	●	●

Parts No. Of Auto Switch Mounting Band

Switch model	Parts No.	Applicable bore size(mm)
W3	TBT-04	ø 40
	TBT-04	ø 50
	TBT-06	ø 63
	TBT-08	ø 80
	TBT-08	ø 100

Base Material And Surface Treatment

DescriptionMaterial		Note	
Cover		Aluminum alloy	Silver paint
Cylinder tube		Aluminum alloy	Hard alumite
		Carbon steel tube	Inside/Hard chrome plated
			Outside/Platinum silver
Seals areal	Lublicated	NBR	PDU JIS B2401 O-ring
	Non-lube	NBR	PDU, NLP
	Air-hydro	NBR	SCB, SKY, SDA
Piston rod		Carbon steel	Hard chrome plated
Piston		Aluminum alloy	Chromate

Gaiter/Material

Symbol	Material	Max.ambient temperature
J	Nylon tarpaulin	60℃
K	Neoprene cloth	※110℃

※ For gaiter itself

Precautions

① When mounting, completely flush the piping and be careful that dust and chips do not enter the cylinder.

② Load of piston rod should always be aligned parallel with the cylinder axis.

③ Avoid damaging(scratches, nicks) on the piston rod, which would lead to damage of rod seal, resulting in air leakage.

④ 〈Lubrication〉
Use non-additive turvine oil ISO-VG32.
Never use machine oil spindle oil.

⑤ 〈L. P. Oil〉
Use ISO VG-22-46 or equivalent L. P. oil.
Never use machine oil nor spindle oil.

⑥ Open air exhaust valve and completely let the inside air out before use.

⑦ In case you need cushion only on the air side, you don't have to specify the above. All you have to do is suffix R or H, and for others, follow "How to Order."

Construction

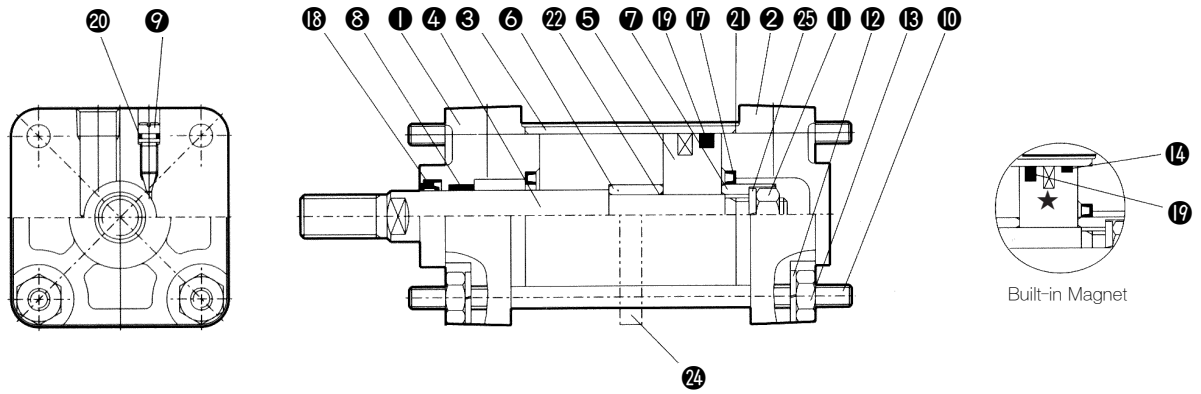

Parts List

NO.	Description	Material	Note
❶	Rod cover	Aluminum alloy	Silver paint
❷	Head cover	Aluminum alloy	Silver paint
❸	※Cylinder tube	Aluminum alloy	Hard alumite
❹	Piston rod	Carbon steel	Hard chrome plated
❺	Piston	Aluminum alloy	Chromate
❻	Cushion ring A	Rolled steel	Chromate
❼	Cushion ring B	Rolled steel	Chromate
❽	Bush	Lesd bronze casting	-
❾	Cushion Valve	Rolled steel	Chromate
❿	Tie rod	Carbon steel	Zinc chromate
⓫	Piston nut	Rolled steel	Chromate
⓬	Spring washer	Steel wire	Black Zinc chromate
⓭	Tie rod nut	Rolled steel	Black Zinc chromate
⓮	Wearing	Resin	-
㉔	※Tie rod reinforcing ring	Cast iron	-
㉕	Spring washer	Steel wire	Zinc chromate

※ ㉔ Tie rod reinforcing ring : Available only for 1,000 stroke or more.
※ ③ In the case of Iron tube cylinder : Carbon steel tube, inside hard chrome plated.

Seals List

NO.	Description	Material	Parts. No.				
			40	50	63	80	100
Lube Type							
⓱	Cushion seal	NBR	DSM-20	DSM-25	DSM-25	DSM-30	DSM-35
⓲	Rod seal		PDU-16Z	PDU-20Z	PDU-20Z	PDU-25Z	PDU-30Z
⓳	Piston seal		P34	P44	P53	P70	P90
⓴	Cushion Valve seal		P3	P3	P3	P5	P5
㉑	Cylinder tube gasket		TC2A040-16-1486	TC2A050-16-1487	TC2A063-16-1488	TC2A080-16-1489	TC2A100-16-1490
㉒	Piston gasket		TCA40-1606	TCA63-1608	TCA63-1608	TCA80-1609	TCA100-1610
Lube Type/Long Stroke							
⓳	Piston seal	NBR	NLP-40A	NLP-50A	NLP-63A	NLP-80A	NLP-100A
None-Lube Type			Same as lube type except⑲				
⓳	Piston seal	NBR	NLP-40A	NLP-50A	NLP-63A	NLP-80A	NLP-100A
Air-hydro Type			Same as lube type except⑱,⑲ and㉓				
⓲	Rod seal		SKY-16	SKY-20	SKY-20	SKY-25	SKY-30
⓳	Piston seal	NBR	SDA-40	SDA-50	SDA-63	SDA-80	SDA-100
㉓	Wiper ring		SCB-16	SCB-50	SCB-20	SCB-25	SCB-30

★ Magnet (Built-in Magnet)

Basic Type/(B)

Lube Type(AMB, AMBF), Non-Lube Type(AMBN), Air-Hydro Type(AMBH)

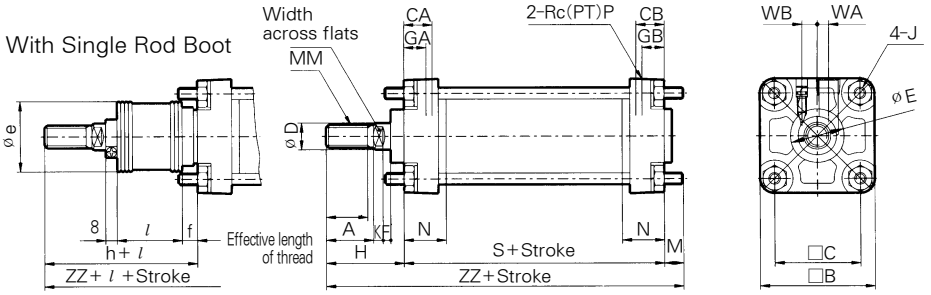

(mm)

Bore size (mm)	Stroke range(mm) Without gaiter	Stroke range(mm) With gaiter	Effective length of thread	Width across flats	A	□B	□C	CA	CB	ø D	ø E	F	GA	GB	J	K	M	MM	N	P	S	WA	WB	Without Rod Boot H	Without Rod Boot ZZ	With Rod Boot ø e	With Rod Boot f	With Rod Boot h	With Rod Boot l	With Rod Boot ZZ
ø40	~500	20~500	27	14	30	60	44	18	18	16	32	10	15	15	M8×1.25	6	11	M14×1.5	27	1/4	84	5	10.5	51	146	43	11.2	59	1/4 Stroke	154
ø50	~600	20~600	32	18	35	70	52	21	21	20	40	10	17	17	M8×1.25	7	11	M18×1.5	30	3/8	90	8	9.9	58	159	52	11.2	66		167
ø63	~600	20~600	32	18	35	85	64	21	21	20	40	10	17	17	M10×1.25	7	14	M18×1.5	31	3/8	98	9	11.5	58	170	52	11.2	66		178
ø80	~750	20~750	37	22	40	102	78	26	26	25	52	14	21	21	M12×1.75	11	17	M22×1.5	37	1/2	116	11	13	71	204	65	12.5	80		213
ø100	~750	20~750	37	26	40	116	92	28	28	30	52	14	21	21	M12×1.75	11	17	M26×1.5	40	1/2	126	13	14	72	215	65	14	81		224

Foot Type/(L)

Lube Type(AML, AMLF), Non-Lube Type(AMLN), Air-Hydro type(AMLH)

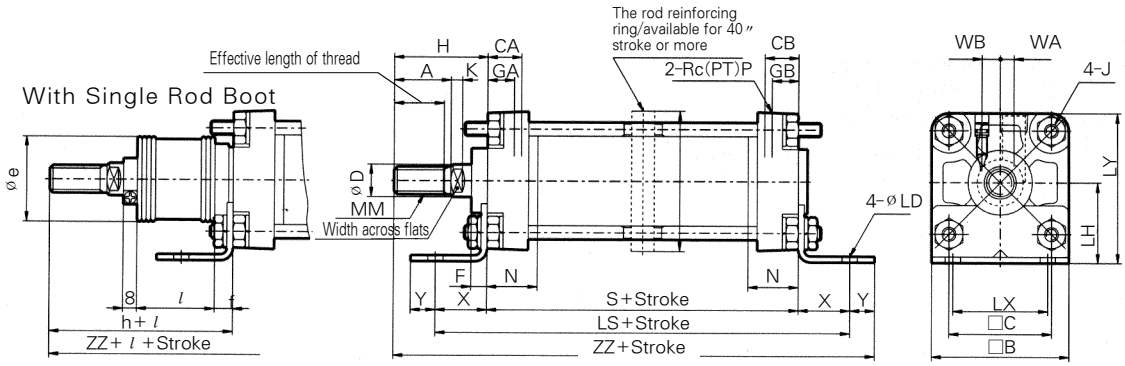

Bore size (mm)	Stroke range(mm) Without Rod Boot	Stroke range(mm) With Rod Boot	Effective length of thread	A	□B	□C	CA	CB	ø D	ø E	F	GA	GB	J	K	MM	N	P	S	WA	WB
ø40	~500	20~500	27	30	60	44	18	18	16	32	10	15	15	M8×1.25	6	M14×1.5	27	1/4	84	5	10.5
ø50	~600	20~600	32	35	70	52	21	21	20	40	10	17	17	M8×1.25	7	M18×1.5	30	3/8	90	8	9.9
ø63	~600	20~600	32	35	85	64	21	21	20	40	10	17	17	M10×1.25	7	M18×1.5	31	3/8	98	9	11.5
ø80	~750	20~750	37	40	102	78	26	26	25	52	14	21	21	M12×1.75	11	M22×1.5	37	1/2	116	11	13
ø100	~750	20~750	37	40	116	92	28	28	30	52	14	21	21	M12×1.75	11	M26×1.5	40	1/2	126	13	14

Bore size (mm)	X	Y	ø LD	LH	LS	LT	LX	LY	Without Rod Boot H	Without Rod Boot ZZ	With Rod Boot ø e	With Rod Boot f	With Rod Boot h	With Rod Boot l	With Rod Boot ZZ
ø40	27	13	9.0	40	138	3.2	42	70	51	175	43	11.2	59	1/4 Stroke	183
ø50	27	13	9.0	45	144	3.2	50	80	58	188	52	11.2	66		196
ø63	34	16	11.5	50	166	3.2	59	93	58	206	52	11.2	66		214
ø80	44	16	13.5	65	204	4.5	76	116	71	247	65	12.5	80		256
ø100	43	17	13.5	75	212	6.0	92	133	72	258	65	14.0	81		267

Long Stroke Type

Bore size (mm)	Stroke range (mm)	RT	RY
ø40	501~800	–	–
ø50	601~1200	30	76
ø63	601~1200	40	92
ø80	751~1400	45	112
ø100	751~1500	50	136

Front Flange/(F)

Long Type(AMF, AMFF), Non-Lube Type(AMFN), Air-Hydro Type(AMFH)

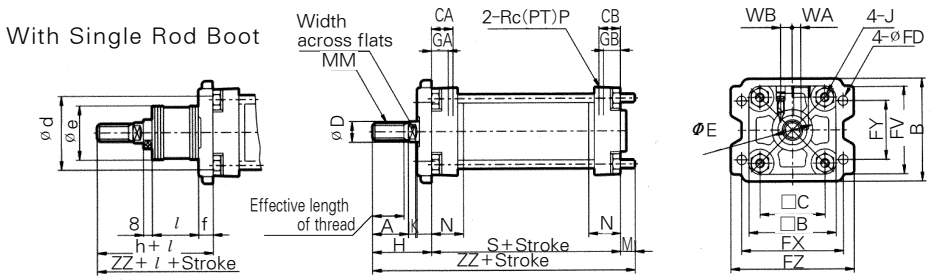

Bore size (mm)	Stroke range(mm) Without Rod Boot	Stroke range(mm) With Rod Boot	Effective length of thread	A	B	□B	□C	CA	CB	ØD	ØE	GA	GB	J	K	M	MM	N	P	S	WA	WB
Ø40	~800	20~800	27	30	71	60	44	18	18	16	32	15	15	M8×1.25	6	11	M14×1.5	27	1/4	84	5	10.5
Ø50	~1,000	20~1,000	32	35	81	70	52	21	21	20	40	17	17	M8×1.25	7	11	M18×1.5	30	3/8	90	8	9.9
Ø63	~1,000	20~1,000	32	35	101	85	64	21	21	20	40	17	17	M10×1.25	7	14	M18×1.5	31	3/8	98	9	11.5
Ø80	~1,000	20~1,000	37	40	119	102	78	26	26	25	52	21	21	M12×1.75	11	17	M22×1.5	37	1/2	116	11	13
Ø100	~1,000	20~1,000	37	40	133	116	92	28	28	30	52	21	21	M12×1.75	11	17	M26×1.5	40	1/2	126	13	14

Bore size (mm)	FV	ØFD	FT	FX	FY	FZ	Without Rod Boot H	Without Rod Boot ZZ	With Rod Boot ★Ød	With Rod Boot Øe	With Rod Boot f	With Rod Boot h	With Rod Boot l	With Rod Boot ZZ
Ø40	60	9.0	12	80	42	100	51	146	52	43	15	59	1/4 Stroke	154
Ø50	70	9.0	12	90	50	110	58	159	58	52	15	66		167
Ø63	86	11.5	15	105	59	130	58	170	58	52	17.5	66		178
Ø80	102	13.5	18	130	76	160	71	204	80	65	21.5	80		213
Ø100	116	13.5	18	150	92	180	72	215	80	65	21.5	81		224

★ Hole diameter of Rod Boot to mount Air-cylinder should be larger than the outside diameter of gaiter mounting bracket Ød.

Long Stroke(1001 Stroke or more)

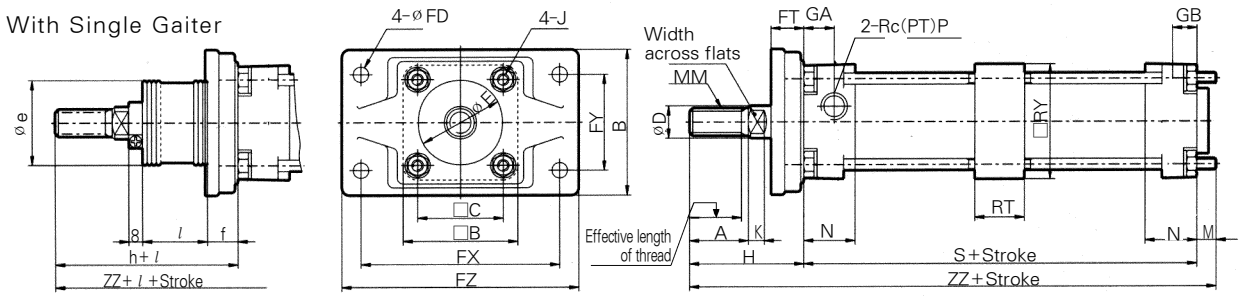

Bore size (mm)	Stroke range (mm)	Effective length of thread	A	B	□B	□C	ØD	ØE	GA	GB	J	K	M	MM	N	P	S	WA	WB
Ø50	1,001~1,200	32	35	88	70	52	20	40	17	17	M8×1.25	7	6	M18×1.5	30	3/8	90	8	9.9
Ø63	1,001~1,200	32	35	105	85	64	20	40	17	17	M10×1.25	7	10	M18×1.5	31	3/8	98	9	11.5
Ø80	1,001~1,400	37	40	124	102	78	25	52	21	21	M12×1.75	11	12	M22×1.5	37	1/2	116	11	13
Ø100	1,001~1,500	37	40	140	116	92	30	52	21	21	M12×1.75	11	12	M26×1.5	40	1/2	126	13	14

Bore size (mm)	ØFD	FT	FX	FY	FZ	RT	RY	Without Rod Boot H	Without Rod Boot ZZ	With Rod Boot ★Øe	With Rod Boot f	With Rod Boot h	With Rod Boot l	With Rod Boot ZZ
Ø50	9.0	20	120	58	144	30	76	67	163	52	19	66	1/4 Stroke	162
Ø63	11.5	23	140	64	170	40	92	71	179	52	19	66		174
Ø80	13.5	28	164	84	198	45	112	87	215	65	21	80		208
Ø100	13.5	29	180	100	220	50	136	89	227	65	21	81		219

★ Hole diameter of rod boot to mount Air-cylinder should be larger than the outside diameter of rod boot mounting bracket Øe.

Rear Flange/(G)

Lube Type(AMG, AMGF), Non-Lube Type(AMGN), Air-Hydro Type(AMGH)

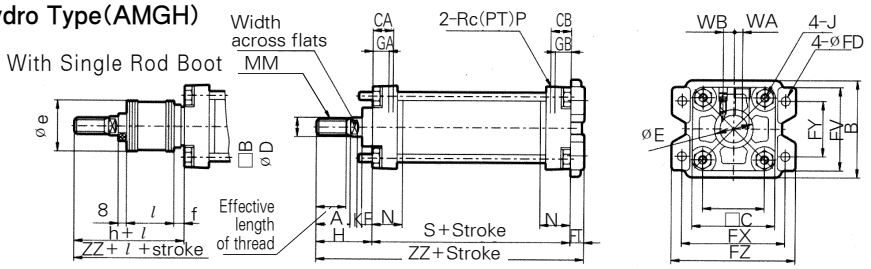

Bore size (mm)	Stroke range Without Rod Boot	Stroke range With Rod Boot	Effective length of thread	A	B	□B	□C	CA	CB	Ø D	Ø E	F	GA	GB	J	K	MM	N	P	S	WA	WB
Ø40	~500	20~500	27	30	71	60	44	18	18	16	32	10	15	15	M8×1.25	6	M14×1.5	27	1/4	84	5	10.5
Ø50	~600	20~600	32	35	81	70	52	21	21	20	40	10	17	17	M8×1.25	7	M18×1.5	30	3/8	90	8	9.9
Ø63	~600	20~600	32	35	101	85	64	21	21	20	40	10	17	17	M10×1.25	7	M18×1.5	31	3/8	98	9	11.5
Ø80	~750	20~750	37	40	119	102	78	26	26	25	52	14	21	21	M12×1.75	11	M22×1.5	37	1/2	116	11	13
Ø100	~750	20~750	37	40	133	116	92	28	28	30	52	14	21	21	M12×1.75	11	M26×1.5	40	1/2	126	13	14

Bore size (mm)	FV	Ø FD	FT	FX	FY	FZ	Without Rod Boot H	Without Rod Boot ZZ	With Rod Boot Ø e	f	h	l	ZZ
Ø40	60	9.0	12	80	42	100	51	147	43	11.2	59	1/4 Stroke	155
Ø50	70	9.0	12	90	50	110	58	160	52	11.2	66		168
Ø63	86	11.5	15	105	59	130	58	171	52	11.2	66		179
Ø80	102	13.5	18	130	76	160	71	205	65	12.5	80		214
Ø100	116	13.5	18	150	92	180	72	216	65	14.0	81		225

Single Clevis/(C)

Lube Type(AMC, AMCF), Non-Lube Type(AMCN), Air-Hydro Type(AMCH)

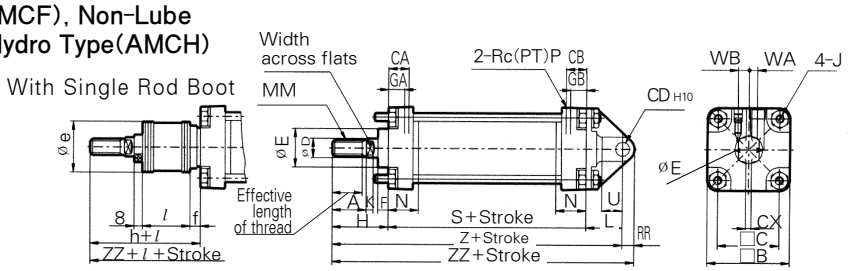

Bore size (mm)	Stroke range Without Rod Boot	Stroke range With Rod Boot	Effective length of thread	A	□B	□C	CA	CB	Ø D	Ø E	F	GA	GB	J	K	L	MM	N	P	S	WA	WB
Ø40	~500	20~500	27	30	60	44	18	18	16	32	10	15	15	M8×1.25	6	30	M14×1.5	27	1/4	84	5	10.5
Ø50	~600	20~600	32	35	70	52	21	21	20	40	10	17	17	M8×1.25	7	35	M18×1.5	30	3/8	90	8	9.9
Ø63	~600	20~600	32	35	85	64	21	21	20	40	10	17	17	M10×1.25	7	40	M18×1.5	31	3/8	98	9	11.5
Ø80	~750	20~750	37	40	102	78	26	26	25	52	14	21	21	M12×1.75	11	48	M22×1.5	37	1/2	116	11	13
Ø100	~750	20~750	37	40	116	92	28	28	30	52	14	21	21	M12×1.75	11	58	M26×1.5	40	1/2	126	13	14

Bore size (mm)	RR	U	Ø CD H10	CX	Without Rod Boot H	Z	ZZ	With Rod Boot Ø e	f	h	l	Z	ZZ
Ø40	10	16	$10^{+0.058}_{0}$	$15.0^{-0.1}_{-0.3}$	51	165	175	43	11.2	59	1/4 Stroke	173	183
Ø50	12	19	$12^{+0.070}_{0}$	$18.0^{-0.1}_{-0.3}$	58	183	195	52	11.2	66		191	203
Ø63	16	23	$16^{+0.070}_{0}$	$25.0^{-0.1}_{-0.3}$	58	196	212	52	11.2	66		204	220
Ø80	20	28	$20^{+0.084}_{0}$	$31.5^{-0.1}_{-0.3}$	71	235	255	65	12.5	80		244	264
Ø100	25	36	$25^{+0.084}_{0}$	$35.5^{-0.1}_{-0.3}$	72	256	281	65	14.0	81		265	290

Double Clevis Type/(D)

Lube type(AMD, AMDF), Non-Lube Type(AMDN), Air-Hydro Type(AMDH)

With Single Rod Boot

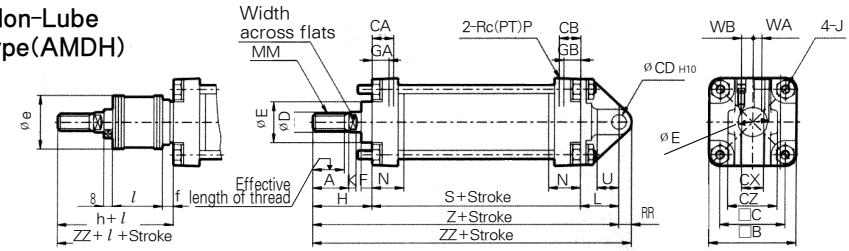

Bore size (mm)	Stroke range Without Rod Boot	Stroke range With Rod Boot	Effective length of thread	A	□B	□C	CA	CB	ØD	ØE	F	GA	GB	J	K	L	MM	N	P	S	WA	WB
Ø40	~500	20~500	27	30	60	44	18	18	16	32	10	15	15	M8×1.25	6	30	M14×1.5	27	1/4	84	5	10.5
Ø50	~600	20~600	32	35	70	52	21	21	20	40	10	17	17	M8×1.25	7	35	M18×1.5	30	3/8	90	8	9.9
Ø63	~600	20~600	32	35	85	64	21	21	20	40	10	17	17	M10×1.25	7	40	M18×1.5	31	3/8	98	9	11.5
Ø80	~750	20~750	37	40	102	78	26	26	25	52	14	21	21	M12×1.75	11	48	M22×1.5	37	1/2	116	11	13
Ø100	~750	20~750	37	40	116	92	28	28	30	52	14	21	21	M12×1.75	11	58	M26×1.5	40	1/2	126	13	14

Bore size (mm)	RR	U	ØCD H10	CX	CZ	Without Rod Boot H	Z	ZZ	With Rod Boot Ø e	f	h	l	Z	ZZ
Ø40	10	16	10 $^{+0.058}_{0}$	15.0 $^{+0.3}_{+0.1}$	29.5	51	165	175	43	11.2	59	1/4 Stroke	173	183
Ø50	12	19	12 $^{+0.070}_{0}$	18.0 $^{+0.3}_{+0.1}$	38	58	183	195	52	11.2	66		191	203
Ø63	16	23	16 $^{+0.070}_{0}$	25.0 $^{+0.3}_{+0.1}$	49	58	196	212	52	11.2	66		204	220
Ø80	20	28	20 $^{+0.084}_{0}$	31.5 $^{+0.3}_{+0.1}$	61	71	235	255	65	12.5	80		244	264
Ø100	25	36	25 $^{+0.084}_{0}$	35.5 $^{+0.3}_{+0.1}$	64	72	256	281	65	14.0	81		265	290

Center Trunnion Type/(T)

Lube Type(AMT, AMTF), Non-lube Type(AMTN), Air-hydro type(AMTH)

With Single Rod Boot

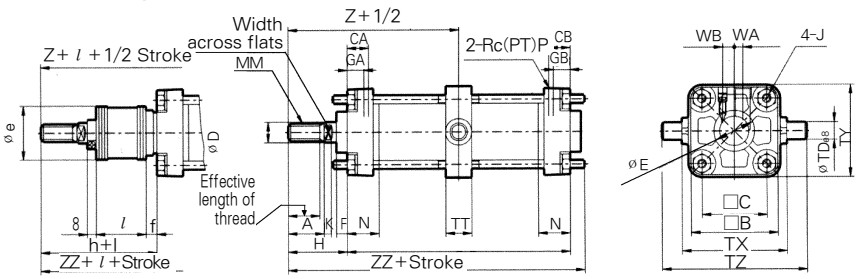

Bore size (mm)	Stroke range Without Rod Boot	Stroke range With Rod Boot	Effective length of thread	A	□B	□C	CA	CB	ØD	ØE	F	GA	GB	J	K	MM	N	P	S	WA	WB
Ø40	~500	20~500	27	30	60	44	18	18	16	32	10	15	15	M8×1.25	6	M14×1.5	27	1/4	84	5	10.5
Ø50	~600	20~600	32	35	70	52	21	21	20	40	10	17	17	M8×1.25	7	M18×1.5	30	3/8	90	8	9.9
Ø63	~600	20~600	32	35	85	64	21	21	20	40	10	17	17	M10×1.25	7	M18×1.5	31	3/8	98	9	11.5
Ø80	~750	20~750	37	40	102	78	26	26	25	52	14	21	21	M12×1.75	11	M22×1.5	37	1/2	116	11	13
Ø100	~750	20~750	37	40	116	92	28	28	30	52	14	21	21	M12×1.75	11	M26×1.5	40	1/2	126	13	14

Bore size (mm)	ØTDe8	TT	TX	TY	TZ	Without Rod Boot H	Z	ZZ	With Rod Boot Ø e	f	h	l	Z	ZZ
Ø40	15 $^{-0.032}_{-0.059}$	22	85	62	117	51	93	140	43	11.2	59	1/4 Stroke	101	148
Ø50	15 $^{-0.032}_{-0.059}$	22	95	74	127	58	103	154	52	11.2	66		111	162
Ø63	18 $^{-0.032}_{-0.059}$	28	110	90	148	58	107	162	52	11.2	66		115	170
Ø80	25 $^{-0.040}_{-0.073}$	34	140	110	192	71	129	194	65	12.5	80		138	203
Ø100	25 $^{-0.040}_{-0.073}$	40	162	130	214	72	135	206	65	14.0	81		144	215

Rod End Nut(Standard accessories)

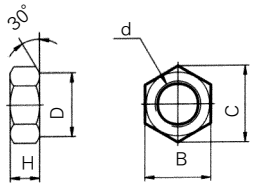

Material : Rolled steel

Part No.	Applicable bore	d	H	B	C	D
TNT-04	ø40	M14×1.5	8	22	25.4	21
TNT-05	ø50 · ø60	M18×1.5	11	27	31.2	26
TNT-08	ø80	M22×1.5	13	32	37.0	31
TNT-10	ø100	M26×1.5	16	41	47.3	39

Knuckle Joint Pin/Clevis Pin

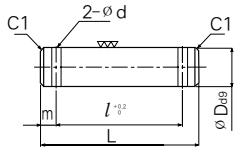

Material : Carbon steel

Part No	Bore Size CLEVIS	Bore Size KNUCKLE	ø Dd9	L	l	m	ø d	Applicable split pin ø × l
TCDP-2	ø40	—	$10^{-0.040}_{-0.076}$	45.2	37.2	4	ø3	ø3×18l
TCDP-3	ø50	ø40·50·60	$12^{-0.050}_{-0.093}$	54.3	46.3	4	ø3	ø3×18l
TCDP-4	ø63	—	$16^{-0.050}_{-0.093}$	70	60	5	ø4	ø4×24 l
TCDP-5	—	ø80	$18^{-0.040}_{-0.076}$	76	66	5	ø4	ø4×25l
TCDP-6	ø80	ø100	$20^{-0.065}_{-0.117}$	82	72	5	ø4	ø4×36 l
TCDP-7	ø100	—	$25^{-0.065}_{-0.117}$	87.5	77.5	5	ø4	ø4×36l

I Type Single Knuckle Joint

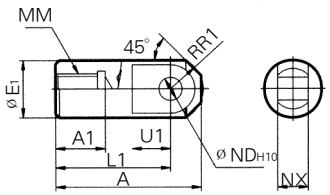

Material : Free cutting sulfur steel

Part No.	Applicable bore	A	A1	ø E1	L1	MM	R1	U1	ø NDH10	NX
TI-04	ø40	69	22	24	55	M14×1.5	15.5	20	12	$16^{-0.1}_{-0.3}$
TI-05	ø50 · ø63	74	27	28	60	M18×1.5	15.5	20	12	$16^{-0.1}_{-0.3}$
TI-08	ø80	91	37	36	71	M22×1.5	22.5	26	18	$28^{-0.1}_{-0.3}$
TI-10	ø100	105	37	40	83	M26×1.5	24.5	28	20	$30^{-0.1}_{-0.3}$

Y Type Double Knuckle Joint

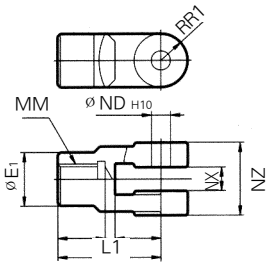

Cast iron

Part No.	Applicable bore	A1	ø E1	L1	MM	R1	U1	ø NDH10	NX	NZ
TY-04A	ø40	22	24	55	M14×1.5	13	25	12	$16^{+0.3}_{+0.1}$	38
TY-05A	ø50 · ø63	27	28	60	M18×1.5	15	27	12	$16^{+0.3}_{+0.1}$	38
TY-08A	ø80	37	36	71	M22×1.5	19	28	18	$28^{+0.3}_{+0.1}$	55
TY-10A	ø100	37	40	83	M26×1.5	21	38	20	$30^{+0.3}_{+0.1}$	61

Trunnion Bracket

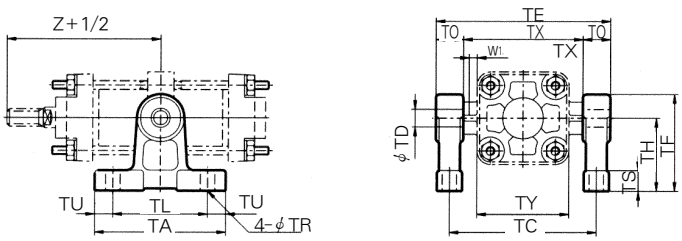

Part No.	Applicable bore	TA	TL	TU	TC	TX	TE	TO	ϕ TR	ϕ TT	TS	TH	TF	TY	W1	Z	ϕ TD-H10
TCA2-S04	ϕ40	80	60	10	102	85	119	17	9	17	12	45	60	62	10	93	$15^{+0.070}_{0}$
	ϕ50	80	60	10	112	95	129	17	9	17	12	45	60	74	10	103	$15^{+0.070}_{0}$
TCA2-S06	ϕ63	100	70	15	130	110	150	20	11	22	14	55	73	90	10	107	$18^{+0.070}_{0}$
TCA2-S08	ϕ80	120	90	15	166	140	192	26	13.5	24	17	75	100	110	12	129	$25^{+0.084}_{0}$
	ϕ100	120	90	15	188	162	214	26	13.5	24	17	75	100	130	12	135	$25^{+0.084}_{0}$

Series AMK

Non-Rotating Piston Rod Type

Non-Lube Type / ø40, ø50, ø63

- HIGH NON-ROTATING ACCURACY/±0.5°
- SAME MOUNTING DIMENSION AS OUR STANDARD TYPE
- AUTO SWITCH CAN BE MOUNTED (TIE ROD MOUNT TYPE)
- NON-LUBRICATED OPERATION POSSIBLE

Symbol

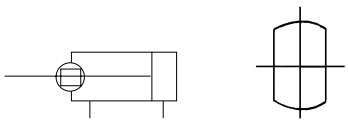

Piston Rod cross section

How to Order

AMK (1) L (2) 40 (3) - 200 (4) J (5) - ○ (6) - W3□ (7) □ (8)

1 Non-Rotating Plston-Rod Type Series (Built-in Magnet)

2 Mounting

3 Bore Size

4 Stroke

5 With Rod Boot

6 Order Made Option

7 Applicable Auto Switch

8 Number of Switch

※ Other how to Order: Same as that of Series AM/How to Order(Refer to page A-108)

Specification

Fluid	Air
Proof pressure	15kgf/cm²{1.47MPa}
Max.operating pressure	9.9kgf/cm²{0.97MPa}
Min.operating pressure	0.5kgf/cm²{0.5MPa}
Ambient and fluid temperature	5~60℃
Piston speed	50~500mm/s
Cushion	Air Cushion
Stroke tolerance	ø40:25~500st:$^{+1.4}_{0}$, ø50, ø63:25~600st:$^{+1.4}_{0}$
Allowable rotational torque	±0.5°
Lubication	Not required
Bore size(mm)	ø40, ø50, ø63,
Basic, Foot, front flange, Mounting	Basic, Foot, front flange, Rear flange, single clevis, Double clevis, Center trunnion

Basic Type(B)

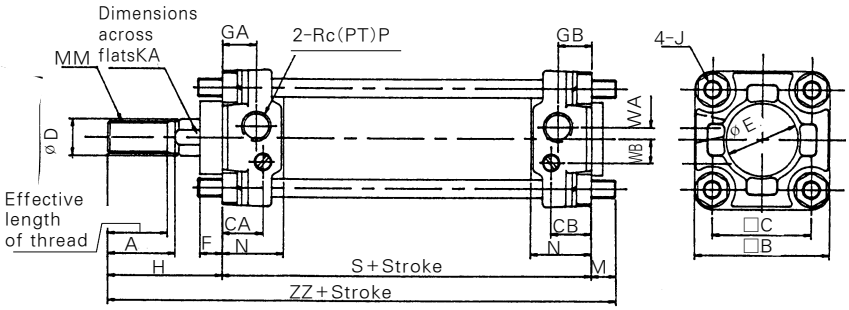

With Single Rod Boot

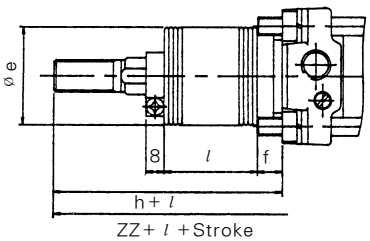

Bore size (mm)	Stroke range Without Rod Boot	Stroke range With Rod Boot	Effective length of thread	A	□B	□C	CA	CB	ø D	ø E	F	GA	GB	J	KA	MM	N	P	S	WA	WB
ø 40	~500	20~500	27	30	60	44	18	18	16	32	10	15	15	M8×1.25	14	M14×1.5	27	1/4	84	5	10.5
ø 50	~600	20~600	32	35	70	52	21	21	20	40	10	17	17	M8×1.25	18	M18×1.5	30	3/8	90	8	9.9
ø 63	~600	20~600	32	35	85	64	21	21	20	40	10	17	17	M10×1.25	18	M18×1.5	31	3/8	98	9	11.5

Bore size (mm)	Without Rod Boot H	Without Rod Boot ZZ	With Rod Boot ø e	f	h	l	ZZ
ø 40	51	146	43	11.2	59	1/4 Stroke	154
ø 50	58	159	52	11.2	66		167
ø 63	58	170	52	11.2	66		178

Series AMW

Double Rod End Type

Bore size / ø40, ø50, ø63, ø80, ø100

- DOUBLE ROD END TYPE CYLINDER
- LONG LIFE, HIGH SPEED OPERATION POSSIBLE
- NON-LUBRICATED OPERATION POSSIBLE
- AUTO SWITCH CAN BE MOUNTED (TIE ROD MOUNT TYPE)

Symbol

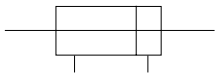

How to Order

AMW L N 40 - 200 - JJ - - W3 -

1 2 3 4 5 6 7 8 9

1 Double Rod End Cylinder Built-in Magnet

2 Mounting

3 Type
- Blank : Lubricated
- N : Non-lube
- H : Air-hydro

4 Bore Size

5 Stroke

6 Rod Boot
- J : Nylon tarpaulin(Single gaiter)
- JJ : Nylon tarpaulin(Double gaiter)
- K : Neoprene cloth(Single gaiter)
- KK : Neoprene cloth(Double gaiter)

7 Order Made Option

8 Applicable Auto Switch

9 Number of Switch

※ Other how to Order: Same as that of Series AM/How to Order(Refer to page A-108)

Cylinder Stroke (mm)

Bore Size	Standard Stroke
ø40	25, 50, 75, 100, 125, 150, 175, 200, 250, 300, 350, 400, 450, 500
ø50	25, 50, 75, 100, 125, 150, 175, 200, 250, 300, 350, 400, 450, 500, 600
ø63	25, 50, 75, 100, 125, 150, 175, 200, 250, 300, 350, 400, 450, 500, 600
ø80	25, 50, 75, 100, 125, 150, 175, 200, 250, 300, 350, 400, 450, 500, 600, 700
ø100	25, 50, 75, 100, 125, 150, 175, 200, 250, 300, 350, 400, 450, 500, 600, 700

Specifications

Type	Lube-Non-lube	Air-hydro
Fluid	Air	L.P.Oil
Proof pressure	15kgf/cm²{1,500kPa}	
Max.operating pressure	9.9kgf/cm²{990kPa}	
Min.operating pressure	0.8kgf/cm²{80kPa}	1.6kgf/cm²{160kPa}
Piston speed	50~500mm/s	0.5~300mm/s
Ambient and fluid temperature	5~60℃	
Cushion	Both side	None
Stroke tolerance	~250st : $^{+1.0}_{0}$, 251~750st : $^{+1.4}_{0}$	
Mounting	Basic, Foot, Flange, Center trunnion	

Basic Type/(B)

Lube Type(AMWB), Non-Lube Type(AMWBN), Air-Hydro Type(AMWBH)

With Single Rod Boot

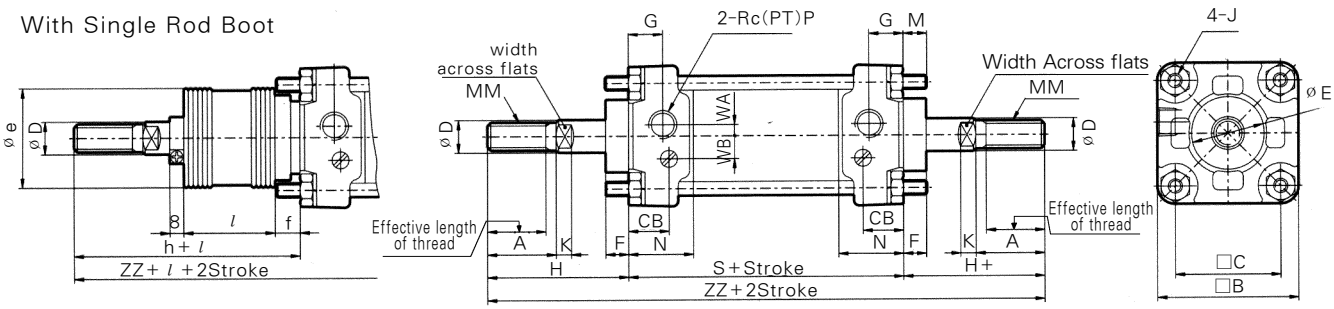

With Double Rod Boot

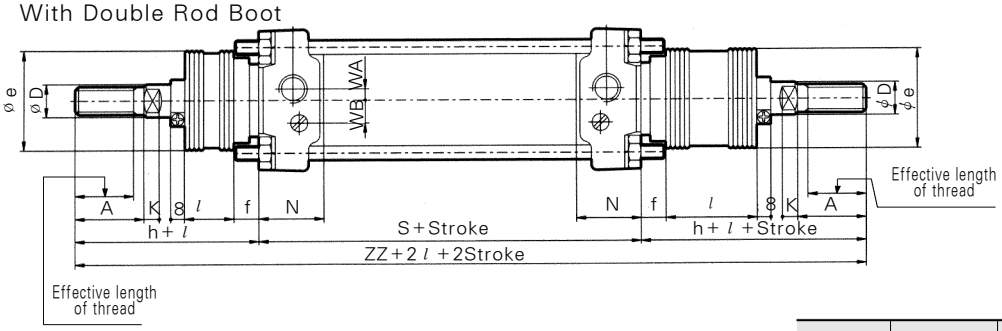

Bore size (mm)	Without Rod Boot H	Without Rod Boot ZZ	With Rod Boot(Single) ø e	f	h	l	ZZ	(Double) ZZ
ø40	51	186	43	11.2	59	1/4 Stroke	194	202
ø50	58	206	52	11.2	66		214	222
ø63	58	214	52	11.2	66		222	230
ø80	71	258	65	12.5	80		267	276
ø100	72	270	65	14.0	81		279	288

Bore size (mm)	Stroke range(mm) Without Rod Boot	Stroke range(mm) With Rod Boot	Effective length of thread	A	□B	□C	CA	CB	ø D	ø E	F	G	J	K	M	MM	N	P	S	WA	WB
ø40	~500	20~500	27	30	60	44	18	18	16	32	10	15	M8×1.25	6	11	M14×1.5	27	1/4	84	5	10.5
ø50	~600	20~600	32	35	70	52	21	21	20	40	10	17	M8×1.25	7	11	M18×1.5	30	3/8	90	8	9.9
ø63	~600	20~600	32	35	85	64	21	21	20	40	10	17	M10×1.25	7	14	M18×1.5	31	3/8	98	9	11.5
ø80	~750	20~750	37	40	102	78	26	26	25	52	14	21	M12×1.75	11	17	M22×1.5	37	1/2	116	11	13
ø100	~750	20~750	37	40	116	92	28	28	30	52	14	21	M12×1.75	11	17	M26×1.5	40	1/2	126	13	14

Adjustable Stroke Cylinder/Extension adjustable Type

AM | Mounting | Type | Bore size | Stroke | Rod Boot | Stroke Additional symbol — XC8

ROD BOOT●
Blank—Without Rod Boot
J —With Rod Boot(Nylon tarpaulin)
K —With Rod Boot(Neoprene cloth)

● Stroke Additionnal symbol
A—Stroke adjusting range 0~-25mm
B—Stroke adjusting range 0~-50mm

The stroke at extend of the cylinder can be adjusted by the stopper in the head side from full stroke 0~-25mm or 0~-50mm

Symbol

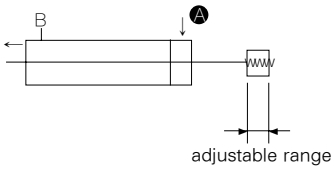

Construction/Dimensions

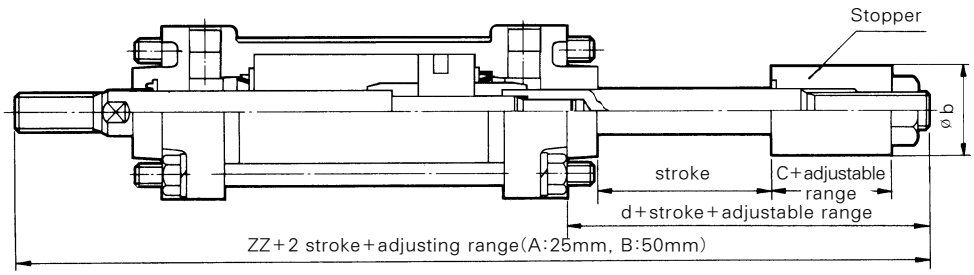

Bore size	ø b	c	d	ZZ
ø40	ø32	22	46	181
ø50	ø42	28	58.5	206.5
ø63		28	54	210
ø80	ø55	35	70	257
ø100		35	70	268

※ Other dimensions are the same as for standard type

Order Made Option

Adjustable Stroke Cylinder/Retraction adjustable Type

AM — Mounting — Type — Bore size — Stroke — Rod Boot — Stroke Additional symbol — XC9

Additional symbol
Blank—Without Rod Boot
J —With Rod Boot (Nylon tarpaulin)
K —With Rod Boot (Neoprene cloth)

Stroke Additional symbol
A—Stroke adjusting range 0~-25mm
B—Stroke adjusting range 0~-50mm

The stroke at retraction of the cylinder can be adjusted from 0~-25mm or 0~-50mm by the adjusting bolt.

Symbol

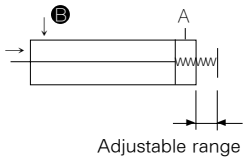

Construction/Dimensions

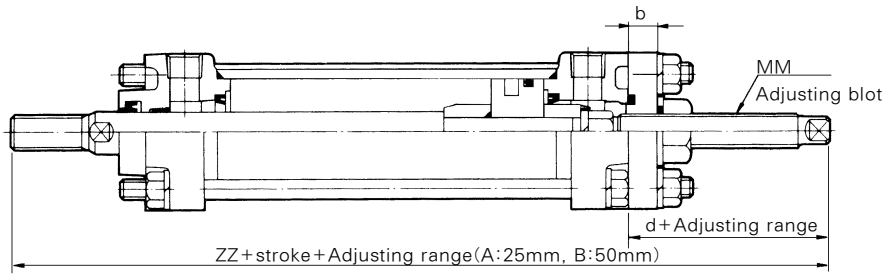

Bore Size	MM	b	d	ZZ
ø40	M16×1.5	9	43	178
ø50	M16×1.5	11	44	192
ø63	M20×1.5	11	48	204
ø80	M24×1.5	15	59	246
ø100	M24×1.5	15	57	255

※ Other dimensions are the same as for standard type

DUAL Stroke Cylinder/Double Rod Type

AM — Mounting — Type — Bore size — Stroke A — Rod Boot + Stroke B — Rod Boot — XC10

Additional symbol
Blank—Without Rod Boot
J—With Rod Boot (Nylon tarpaulin)
K—With Rod Boot (Neoprene cloth)

Two cylinders are construted as one cylinder in a back-to-back configuration allowing the cylinder stroke to be controlled in three steps.

Construction/Dimensions

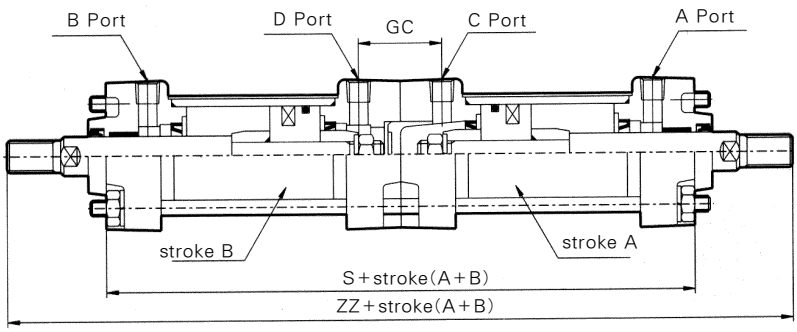

Bore size	GC	S	ZZ
ø40	29	167	269
ø50	33	179	295
ø63	33	195	311
ø80	41	231	373
ø100	41	251	395

※ Other dimensions are the same as for standard type.

DUAL Stroke Cylinder/Single Rod Type

AM (Mounting)(Type)(Bore size)—(Stroke A) + (StrokeB-A)(Rod Boot)— XC11

● Additional symbol
Blank—Without Rod Boot
J—With Rod Boot (Nylon tarpaulin)
K—With Rod Boot (Neoprene cloth)

Construction/Dimensions

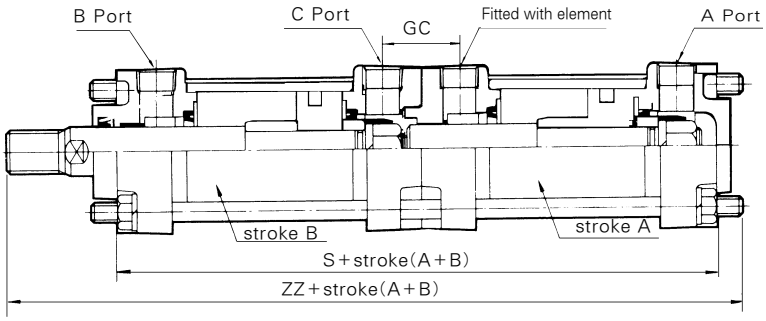

※ Other dimensions are the same as for standard type.

Bore size	GC	S	ZZ
ø40	29	168	230
ø50	33	180	249
ø63	33	196	268
ø80	41	232	320
ø100	41	252	341

With Scraper

AM (Mounting)(Type)(Bore size)—(Stroke)— XC4

Specifications

Type	Lube, Non-Lube
Applicable cylinder bore size	ø40, ø50, ø63, ø80, ø100
Max.operating pressure	9.9kgf/cm²{990kPa}
Min.operating pressure	0.5kgf/cm²{50kPa}
Cushion	Air cushion(Standard)
Wiper ring	Material:SCB
Mounting	Basic type, Axial foot type, Rod side flange type, head side flange type, Single clevis type, Double clevis type, center trunnion

Construction

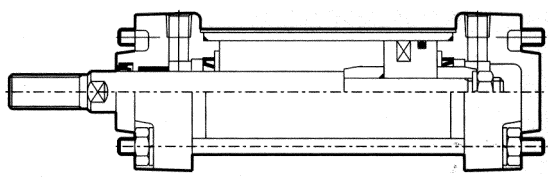

※ Dimensions are the same as for standard type.

Order Made Option

Over sized Rod

AM (Mounting)(Type)(Bore size)–(Stroke)(Suffix)– XB5

The Piston Rod for the cylinder has larger diameter and increased intensity. In addition the stroke is long and this cylinder can be used in the cases of existing apprehensions for the crooked Piston Rod.

Type	Lube, Non-lube				
Bore size(mm)	ø40	ø50	ø63	ø80	ø100
Piston rod diameter(mm)	ø20	ø25	ø25	ø30	ø36

Construcion/Dimensions

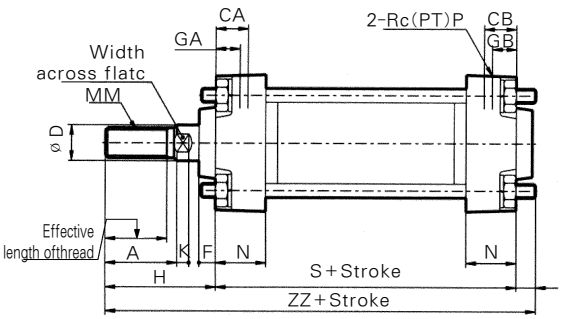

Bore size(mm)	A	ø D	K	MM	P	H	ZZ
40	35	20	7	M18×1.5	1/4	58	153
50	40	25	11	M22×1.5	3/8	71	172
63	40	25	11	M22×1.5	3/8	71	183
80	40	30	11	M26×1.5	1/2	72	205
100	50	36	15	M30×1.5	1/2	85	228

※ Other dimensions are the same as for Series AM standard type.

End Lock Cylinder

AM (Mounting)(Type)(Bore size)–(Stroke)(Suffix)– X105

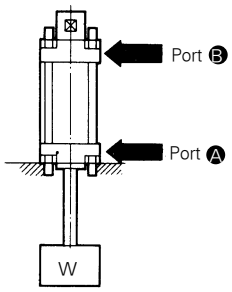

When the port B is the status of evacuation, the lock will be unlocked automatically if the piston rod reach the end of the head side stroke.
Moreover the lock will be unlocked automatically if the air go into the port B.

Specifications

Type	Lube, Non-lube
Bore size	ø40, ø50, ø63, ø80, ø100
Cushion	Air Custion
Action	Double Acting
Retaining force	ø40:20kgf, ø50~ø100:150kgf
Lock start pressure	0.5kgf/cm²{0.05MPa}
Lock release pressure	2kgf/cm²{0.2MPa}
Mounting	Basic, Foot, Flange, Center trunnion

Construction/Dimensions

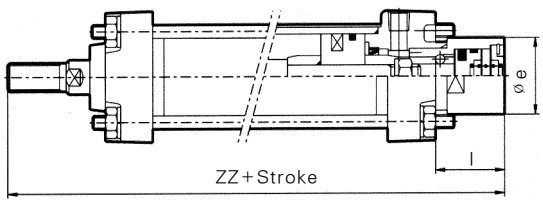

Bore size	ø e	l	ZZ
ø40	34	31	166.0
ø50	48	47.5	195.5
ø63	48	47.5	203.5
ø80	50	47.0	234.0
ø100	50	49.0	247.0

Tandem Type Air Cylinder

AM (Mounting) (Type) (Bore size) – (Stroke) (Suffix) – XC12

This cylinder is produced with two air cylinders in line allowing double the output force.

Symbol

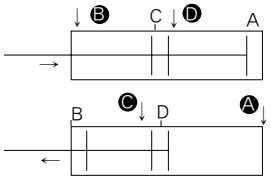

When air pressure is supplied to ports Ⓑ and Ⓓ,the output force is doubled in the return stroke.

When air pressure is supplied to ports Ⓐ and Ⓒ, the output force is doubled in the extend stroke.

Specifications

Type	Lube, Non-lube
Bore size	ø40, ø50, ø63, ø80, ø100
Max.operating pressure	9.9kgf/cm²{0.97MPa}
Min.operating pressure	1kgf/cm²{0.1MPa}
Cushion	Air cushion(Standard)
Action	Double Acting
Mounting	Basic type, Foot type, Rod side flange type, Head side flange type, Single clevis type, Double clevis type

Construction

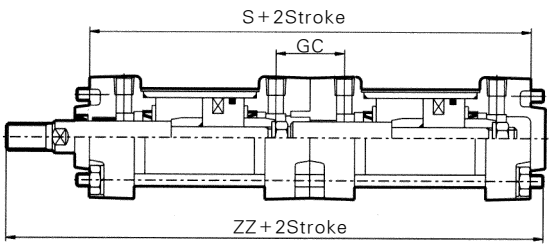

Bore size	GC	S	ZZ
ø40	29	169	231
ø50	33	181	250
ø63	33	197	269
ø80	41	233	321
ø100	41	253	342

High Temperature Cylinder

AM (Mounting) N (Bore size) – (Stroke) (Suffix) – XB6

Can be used at high temperature up to 150°C

Specifications

Type	Non-lube
Bore size	ø40, ø50, ø63, ø80, ø100
Ambient and media temperature	-20～+150℃
Seal material	FPM

※ Auto-switch capable not available

Stainless Steel Rod

AM (Mounting) (Type) (Bore size) – (Stroke) (Suffix) – XC6

Stainless steel piston rod is used to protect in harsh or wet environment.
Auto-switch mounting available

Specifications

Type	Lube, Non-lube, Air-hydro
Bore size	ø40, ø50, ø63, ø80, ø100
Piston rod nut material	Stainless steel(SUS 304)

With Coil Scraper

AM (Mounting) (Type) (Bore size) – (Stroke) (Suffix) – X104

Cushion
Blank – Both End
R – Rod End
H – Head End
N – Without cushion

Auto Switch Mounting Position(At stroke End)

W3

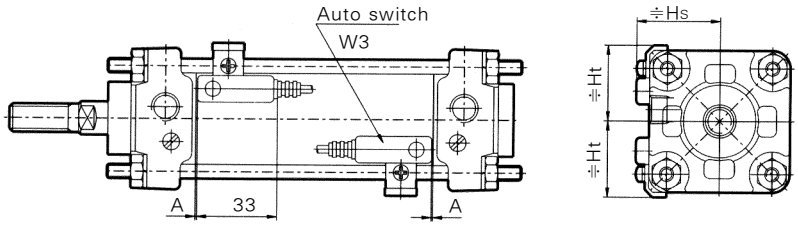

Auto s/w model	Auto s/w mounting position	Auto s/w placement dimensions(mm)				
		ø40	ø50	ø63	ø80	ø100
W3	A	0(0)	0(0)	0(2.5)	2(6)	4(7.5)
	B	1(0)	1(0)	5(1.5)	8(4)	10(6.5)
	≒Hs	40	43.5	49	55.5	63
	≒Ht	31	35	42	50	57.5

※ ( ):in parentheses are for long stroke, non-lube type and air-hydro type, but long stroke is available only for foot type and front flange type in the series AM

Minimum Auto Switch Mountable Storke

Minimum auto switch mountable stroke is as follows.

n:No. of auto switch

Auto switch model	No. of Auto switch	Mounting bracket except trunnion	Center trunnion			
			ø40, ø50	ø63	ø80	ø100
W3	With 2 switch (different, same surface) with 1 switch	15	90	100	110	120
	With n switches (same surface)	$15+55\left(\frac{n-2}{2}\right)$ n=1, 2, 3, 4,···	$90+100\left(\frac{n-4}{2}\right)$ n=4, 8, 12, 16, ···	$100+55\left(\frac{n-4}{2}\right)$ n=4, 8, 12, 16, ···	$110+55\left(\frac{n-4}{2}\right)$ n=4, 8, 12, 16, ···	$120+55\left(\frac{n-4}{2}\right)$ n=4, 8, 12, 16, ···

Auto Switch Specifications

Auto Swich Model	W3		
Application	Relay, Sequence Control		
Load Voltage	DC24V	AC100V	AC200V
Max. Load Current / Range of Load Current	5~50mA	5~25mA	5~12.5mA
Protection Circuit Contact Breaker Point	Built-in		
Internal Voltage Drop	2.4V		
Indicator Light	ON:Red Light Emitting Diode		

- Leakage current - None
- Response time - 1.2ms
- Lead Wire - Oil proof vinyl. ø4, (0.3)mm², 2 wire(red, black), 0.5m
- Impact Resistance - 30G
- Insulation Resistance - 50MΩ or more under the test voltage 500VDC (Between case and cable)
- Withstand Voltage - 1500VAC 1min(between case and cable)
- Ambient Temperature - -10~60℃
- Protection Structure - IEC spec IP67, Water-proof(JISCO920), oil-proof.

※ If 3m lead wire is required, L is put at end of model numbers.
(Example) W3L

Auto Switch/Internal Circuit

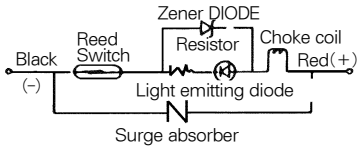

Auto Switch Dimensions (mm)

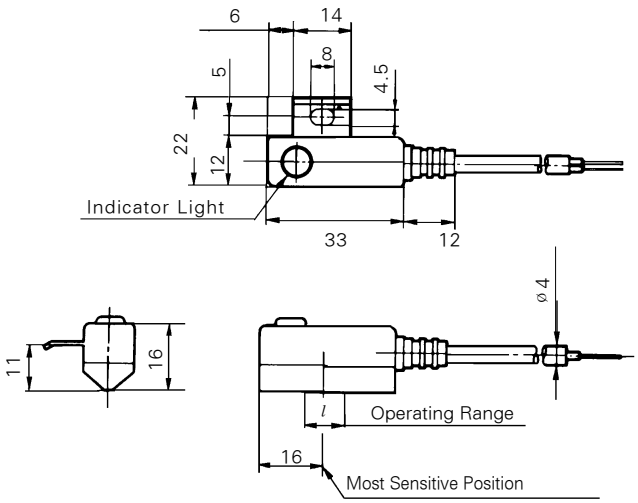

Operating Range (l Dimensions) (mm)

Series	Bore Size(mm)				
	ø40	ø50	ø63	ø80	ø100
AM	9	10	11	11	11

Series AM2

Air Cylinder

Bore size / ø40, ø50, ø63, ø80, ø100

- Improved energy absorption capacity
- Cylinder with high tech appearance
- Improved cushion capacity
- Compact and lightweight design
- Increase kinetic energy absorption

Symbol

Double Acting

How to Order

AMD2 (B) (H) (50) – (150) (N) – (XC16) – (W3) [S]

1 2 3 4 5 6 7 8 9 10 11 12

1 Actuator

2 Medium Cylinder

3 Magnet
- Blank : Without Magnet
- D : Built-in Magnet

4 Series No

5 Mounting
- B : Basic
- L : Foot
- F : Rod Side Flange
- G : Head Side Flange
- C : Single Rear Clevis
- D : Double Rear Clevis
- T : Center Trunnion

6 Type
- Blank : Lubricated
- N : Non-Lube
- H : Low Pressure
- F : Hydraulic

7 Bore Size
- 40 : 40mm
- 50 : 50mm
- 63 : 63mm
- 80 : 80mm
- 100 : 100mm

8 Standard Stroke
- ø40 : 25,50,75,100,125,150,175, 200,250,300,350
- ø50,63 : 25,50,75,100,125,150,175,200, 250,300,350,400, 450,500,600
- ø80,100 : 50,75,100,125,150,175,200,250, 300,350,400,450,500,600,700

9 Suffix Symbol for Cylinder
- Gaiter J : Lubricator
- K : Neoprene cloth
- Cushion N : None
- R : Rod end
- H : Head end
- Blank : Both end

10 Series
- Blank : Standard Type
- XC16 : Copper-Free

11 Applicable Auto Switches
- Blank : None
- W3 : existing plug point Auto Switch
- W2PL : Intense-Magnetism-Resistant type

12 Number of Switches
- Blank : 2 pcs
- S : 1 pcs
- N : n pcs

Model

Model		Acting	Packing
AM2	Lubricated	Double	O Ring
AM2ON	Non-Lube		Special
AM2OH	Low Pressure		Special

Model No. of Built-in Magnetic Cylinder

If there is no Auto switch at Built-in Magnetic, Auto switch has no sign.
ex) AM2L40-100

Parts No. Of Mounting Bracket

Bore size	Ø40	Ø50	Ø63	Ø80	Ø100
※ Foot	TCA2L40	TCA2L50	TCA2L63	TCA2L80	TCA2L100
Flange	TCA2F40	TCA2F50	TCA2F63	TCA2F80	TCA2F100
Single clevis	TCA2C40	TCA2C50	TCA2C63	TCA2C80	TCA2C100
Double clevis	TCA2D40	TCA2D50	TCA2D63	TCA2D80	TCA2D100

※ 2 pcs min for order of only one cylinder.

Specifications

Type	Lube, Non-lube	Air-hydro
Fluid	Air	L.P.Oil
Proof pressure	15kgf/cm²{1.47MPa}	
Max. operating pressure	9.9kgf/cm²{0.97MPa}	
Min. operating pressure	0.5kgf{0.05MPa}	1.0kgf{0.1MPa}
Ambient and fluid temperature	5~60°C	
Piston speed	50~500mm/s	0.5~300mm/s
Cushion	Air Cushion	Not Available
Stroke tolerance	~250st : $^{+1.0}_{0}$,251~1,000st : $^{+1.4}_{0}$, 1,001~1,500st : $^{+1.8}_{0}$	
Mounting	Basic, Foot, Front flange, Rear flange, Single clevis, Double clevis, Center trunnion	

Weight/Aluminum Tube(Iron Tube)

(kgf)

Bore size		Ø40	Ø50	Ø63	Ø80	Ø100
Basic Weight	Basic	0.940 (0.94)	1.295 (1.40)	2.194 (2.04)	3.507 (3.63)	4.581 (5.07)
	Foot	1.130 (1.13)	1.515 (1.62)	2.534 (2.38)	4.177 (4.30)	5.841 (6.06)
	Flange	1.31 (1.30)	1.75 (1.86)	3.64 (2.84)	4.96 (5.08)	6.72 (6.99)
	Single clevis	1.17 (1.17)	1.49 (1.74)	2.83 (2.67)	4.62 (4.74)	6.63 (6.68)
	Double clevis	1.21 (1.21)	1.48 (1.83)	2.98 (2.83)	4.91 (5.03)	7.15 (7.38)
	Trunnion	1.25 (1.35)	1.84 (1.94)	2.80 (3.00)	5.03 (5.32)	7.15 (7.54)
Additional weight per 2〃 stroke	All mounting bracket (except trunnion iron tube)	0.22 (0.28)	0.28 (0.35)	0.37 (0.43)	0.52 (0.70)	0.65 (0.87)
	Trunnion of iron tube	(0.36)	(0.46)	(0.65)	(0.86)	(1.07)
Accessories	Single knuckle	0.23	0.26	0.26	0.60	0.83
	Double knuckle(with pin)	0.37	0.43	0.43	0.87	1.27

※ In parenthese are for Iron tube type.

Example

AM2L40-100(Foot, Ø40, 100st)
- Basic weight ····· 1.13kgf
- Additional weight ··· ··· 0.22/50st
- Cylinder stroke ····· 100st

1.13+0.22×100/50=1.57kgf

Accessories

Description \ Mounting		Basic	Foot	Front flange	Rear flange	Single clevis	Double clevis	Center trunnion
Standard	Rod end nut	●	●	●	●	●	●	●
	Clevis pin	–	–	–	–	–	●	–
Option	Single knuckle joing	●	●	●	●	●	●	●
	Double knuckle joint(with pin)	●	●	●	●	●	●	●
	Gaiter	●	●	●	●	●	●	●

Parts No. Of Auto Switch Mounting Band

Switch model	Parts No.	Applicable bore size(mm)
W3	TBT-04	ø 40
	TBT-04	ø 50
	TBT-06	ø 63
	TBT-08	ø 80
	TBT-08	ø 100

Base Material And Surface Treatment

DescriptionMaterial		Note	
Cover		Aluminum alloy	Silver paint
Cylinder tube		Aluminum alloy	Hard alumite
		Carbon steel tube	Inside/Hard chrome plated
			Outside/Platinum silver
Seals areal	Lublicated	NBR	PDU JIS B2401 O-ring
	Non-lube	NBR	PDU, NLP
	Air-hydro	NBR	SCB, SKY, SDA
Piston rod		Carbon steel	-
Piston		Aluminum alloy	Chromate

Gaiter/Material

Symbol	Material	Max.ambient temperature
J	Nylon tarpaulin	60℃
K	Neoprene cloth	※110℃

※ For gaiter itself

Basic Type/(B)

Lube Type(AM2B, AM2BF), Non-Lube Type(AM2BN), Air-Hydro Type(AM2BH)

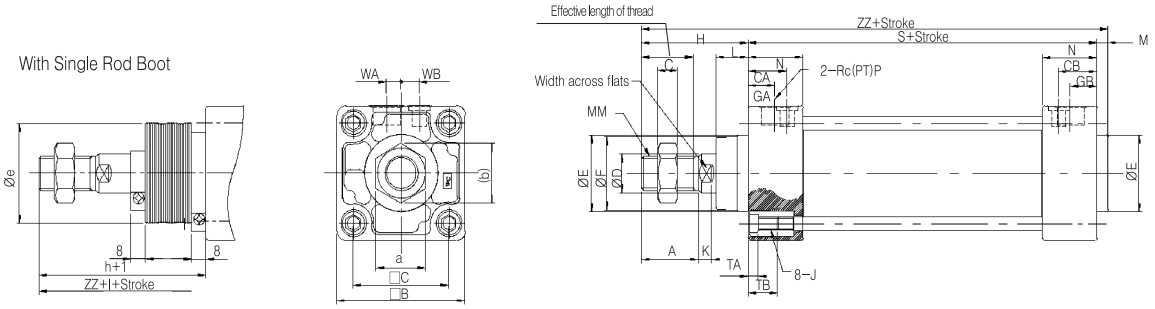

Bore size (mm)	Stroke range(mm) Without gaiter	Stroke range(mm) With gaiter	Effective length of thread	Width across flats	A	□B	□C	CA	CB	ØD	ØE	ØF	GA	GB	M	N	P	S	MM	J	K	L	WA	WB	a	b	c	TA	TB	Without Rod Boot H	Without Rod Boot ZZ	With Rod Boot Øe	With Rod Boot h	With Rod Boot I	With Rod Boot ZZ
40	~500	20~500	25	14	28	60	44	18	18	16	32	30	13	13	5	26.7	1/4	84	M14×1.5	M6×1.0	6	15	5	10.5	22	25.4	8	4.5	16	51	140	43	59	1/4 Stroke	148
50	~600	20~600	28	18	31	70	52	21	21	20	40	38	14.5	14.5	6	29.7	3/8	90	M18×1.5	M8×1.25	7	17.7	8	9.9	27	31.2	11	5.5	16	58	154	52	66		162
63	~600	20~600	28	18	31	85	64	21	21	20	40	38	15	15	6	30.7	3/8	98	M18×1.5	M8×1.25	7	17.4	9	11.5	27	31.2	11	5.5	16	58	162	52	66		170
80	~750	20~750	33	22	36	102	78	26	26	25	52	50	21	21	7	36.7	1/2	116	M22×1.5	M10×1.25	10	22.5	11	13	32	37	13	5.5	17	71	194	65	80		203
100	~750	20~750	37	26	40	116	92	28	28	30	52	50	21	21	8	39.7	1/2	126	M26×1.5	M10×1.25	10	19	13	14	41	47.3	16	5.5	17	72	206	65	81		215

Foot Type/(L)

Lube Type(AM2L, TCA2LF), Non-Lube Type(AM2LN), Air-Hydro Type(AM2LH)

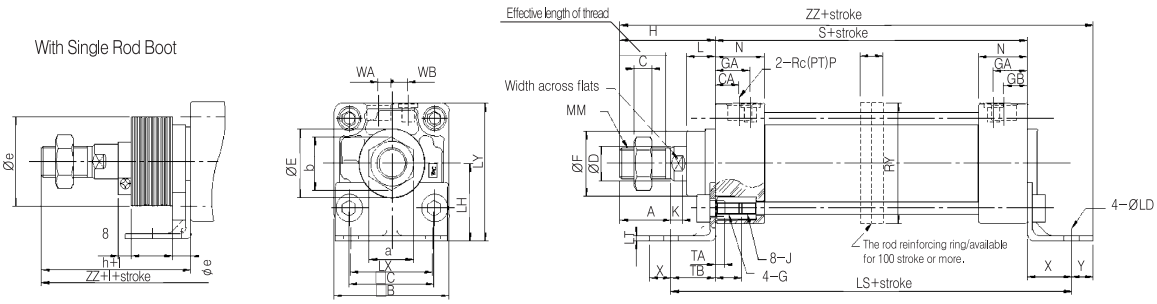

(mm)

Bore size (mm)	Stroke range(mm) Without Rod Boot	Stroke range(mm) With Rod Boot	Effective length of thread	Width across flat	A	□B	□C	CA	CB	ØD	ØE	ØF	GA	GB	L	N	P	S	MM	J	K
40	~500	20~500	25	14	28	60	44	18	18	16	32	30	13	13	15	26.7	1/4	84	M14×1.5	M6×1.0 DP 18	6
50	~600	20~600	28	18	31	70	52	21	21	20	40	38	14.5	14.5	17.7	29.7	3/8	90	M18×1.5	M8×1.25 DP 18	7
63	~600	20~600	28	18	31	85	64	21	21	20	40	38	15	15	17.4	30.7	3/8	98	M18×1.5	M8×1.25 DP 18	7
80	~750	20~750	33	22	36	102	78	26	26	25	52	50	21	21	22.5	36.7	1/2	116	M22×1.5	M10×1.25 DP 18	10
100	~750	20~750	37	26	40	116	92	28	28	30	52	50	21	21	19	39.7	1/2	126	M26×1.5	M10×1.25 DP 18	10

G	WA	WB	a	b	c	TA	TB	X	Y	ØLD	LH	LS	LT	LX	LY	Without Rod Boot H	Without Rod Boot ZZ	With Rod Boot Øe	With Rod Boot f	With Rod Boot h	With Rod Boot I	With Rod Boot ZZ
M6×1.0DP18	5	10.5	22	25.4	8	4.5	16	27	13	9	40	138	3.2	42	70	51	175	43	11.2	59	1/4 Stroke	183
M8×	8	9.9	27	31.2	11	5.5	16	27	13	9	45	144	3.2	50	80	58	188	52	11.2	66		196
1.25DP18	9	11.5	27	31.2	11	5.5	16	34	16	11.5	50	166	3.2	59	93	58	206	52	11.2	66		214
M8×	11	13	32	37	13	5.5	17	44	16	13.5	65	204	4.5	76	116	71	247	65	12.5	80		256
1.25DP18	13	14	41	47.3	16	5.5	17	43	17	13.5	75	212	6	92	133	72	258	65	14	81		267

Long Stroke Type

Bore size (mm)	Stroke range (mm)	RT	RY
40	501~800	–	–
50	601~1200	30	76
63	601~1200	40	92
80	751~1400	45	112
100	751~1400	50	136

Front Flange/(F)

Lube Type(AM2F, AM2FF), Non-Lube Type(AM2FN), Air-Hydro Type(AM2FH)

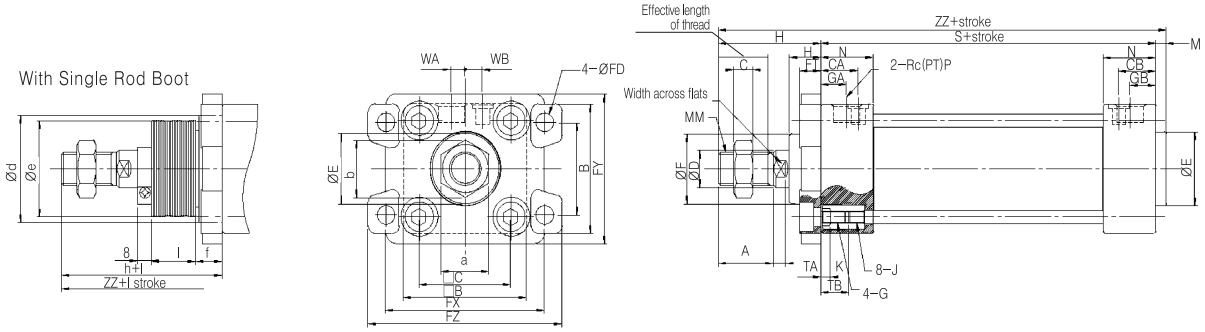

(mm)

Bore size (mm)	Stroke range(mm)		Effective length of thread	Width across flats	A	B	□B	□C	CA	CB	ØD	ØE	ØF	GA	GB	S	MM	G	J	K	L
	Without Rod Boot	With Rod Boot																			
40	~800	20~800	25	14	28	71	60	44	18	18	16	32	30	13	13	84	M14×1.5	M6×1.0 DP 18	M6×1.0 DP 22	6	15
50	~1000	20~1000	28	18	31	81	70	52	21	21	20	40	38	14.5	14.5	90	M18×1.5	M8×1.25 DP 18	M8×1.25 DP 24	7	17.7
63	~1000	20~1000	28	18	31	101	85	64	21	21	20	40	38	15	15	98	M18×1.5	M8×1.25 DP 22	M8×1.25 DP 24	7	17.4
80	~1000	20~1000	33	22	36	119	102	78	26	26	25	52	50	21	21	116	M22×1.5	M10×1.25 DP 24	M10×1.25 DP 26	10	22.5
100	~1000	20~1000	37	26	40	133	116	92	28	28	30	52	50	21	21	126	M26×1.5	M10×1.25 DP 24	M10×1.25 DP 26	10	19

M	N	P	WA	WB	a	b	c	TA	TB	FV	ØFD	FT	FX	FY	FZ	Without Rod Boot		With Rod Boot					
																H	ZZ	*Ød	Øe	f	h	l	ZZ
5	26.7	1/4	5	10.5	22	25.4	8	4.5	16	60	9	12	80	42	100	51	140	52	43	15	59	1/4 Stroke	148
6	29.7	3/8	8	9.9	27	31.2	11	5.5	16	70	9	12	90	50	110	58	154	58	52	15	66		162
6	30.7	3/8	9	11.5	27	31.2	11	5.5	16	86	11.5	15	105	59	130	58	162	58	52	17.5	66		170
7	36.7	1/2	11	13	32	37	13	5.5	17	102	13.5	18	130	76	160	71	194	80	65	21.5	80		203
8	39.7	1/2	13	14	41	47.3	16	5.5	17	116	13.5	18	150	92	180	72	206	80	65	21.5	81		215

★ Hole diameter of Rod Boot to mount Air-cylinder should be larger than the outside diameter of gaiter mounting bracket Ød.

Long Stroke (1001 Stroke or more)

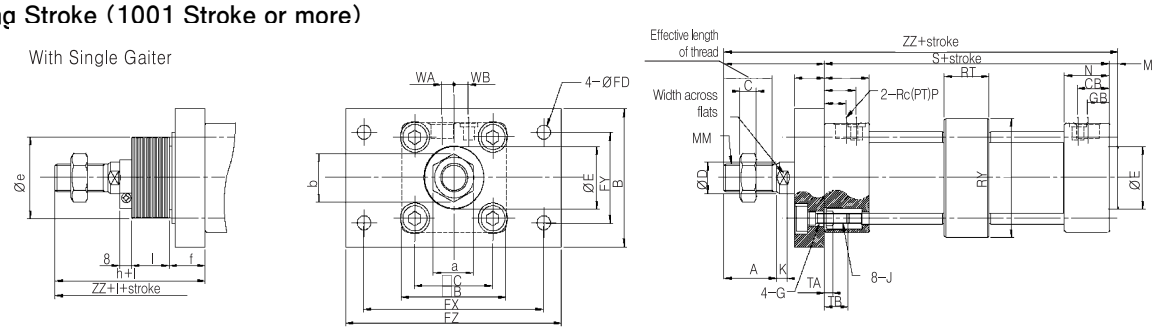

※ It's for steel Flange.

(mm)

Bore size (mm)	Stroke range (mm)	Effective length of thread	Width across flats	A	B	□B	□C	CA	CB	ØD	ØE	GA	GB	P	S	MM	G	J	K	M	N
50	1001~1200	28	18	35	88	70	52	21	21	20	40	14.5	14.5	3/8	90	M18×1.5	M8×1.25 DP 26	M8×1.25 DP 24	7	6	29.7
63	1001~1200	28	18	35	105	85	64	21	21	20	40	15	15	3/8	98	M18×1.5	M8×1.25 DP 27	M8×1.25 DP 24	7	6	30.7
80	1001~1400	33	22	40	124	102	78	26	26	25	52	21	21	1/2	116	M22×1.5	M10×1.25 DP 32	M10×1.25 DP 26	11	7	36.7
100	1001~1500	37	26	40	140	116	92	28	28	30	52	21	21	1/2	126	M26×1.5	M10×1.25 DP 32	M10×1.25 DP 26	11	8	39.7

WA	WB	a	b	c	TA	TB	ØFD	FT	FX	FY	FZ	RT	RY	Without Rod Boot		With Rod Boot				
														H	ZZ	*Ød	f	h	l	ZZ
8	9.9	27	31.2	11	5.5	17	9	20	120	58	144	30	76	67	163	52	24	75	1/4 Stroke	171
9	11.5	27	31.2	11	5.5	17	11.5	23	140	64	170	40	92	71	175	52	27	79		183
11	13	32	37	13	5.5	18	13.5	28	164	84	198	45	112	87	210	65	32.5	96		219
13	14	41	47.3	16	5.5	18	13.5	29	180	100	220	50	136	89	223	65	33.5	98		232

★ Hole diameter of Rod Boot to mount Air-cylinder should be larger than the outside diameter of gaiter mounting bracket Øe.

Rear Flange/(G)

Lube Type(AM2G, AM2GF), Non-Lube Type(AM2GN), Air-Hydro Type(AM2GH)

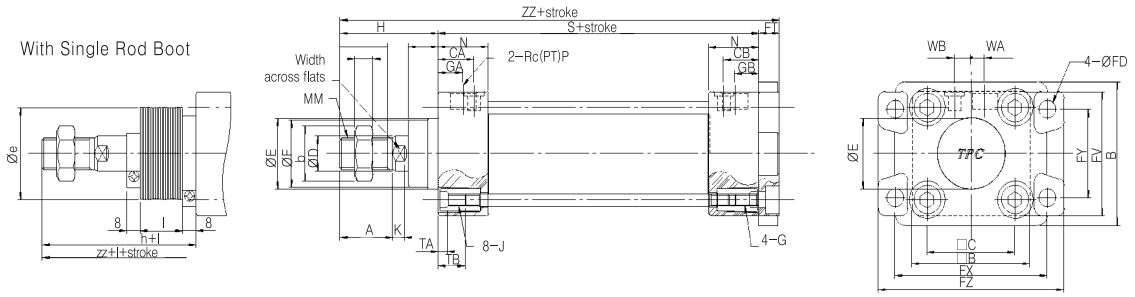

(mm)

Bore size (mm)	Stroke range		Effective length of thread	Width across flats	A	B	□B	□C	CA	CB	ØD	ØE	ØF	GA	GB	S	MM	G	J	K	L
	Without Rod Boot	With Rod Boot																			
40	~500	20~500	25	14	28	71	60	44	18	18	16	32	30	13	13	84	M14×1.5	M6×1.0 DP 18	M6×1.0 DP 22	6	15
50	~600	20~600	28	18	31	81	70	52	21	21	20	40	38	14.5	14.5	90	M18×1.5	M8×1.25 DP 18	M8×1.25DP 24	7	17.7
63	~600	20~600	28	18	31	101	85	64	21	21	20	40	38	15	15	98	M18×1.5	M8×1.25 DP 22	M8×1.25DP 24	7	17.4
80	~750	20~750	33	22	36	119	102	78	26	26	25	52	50	21	21	116	M22×1.5	M10×1.25 DP 24	M10×1.25DP 26	10	22.5
100	~750	20~750	37	26	40	133	116	92	28	28	30	52	50	21	21	126	M26×1.5	M10×1.25 DP 24	M10×1.25DP 26	10	19

N	P	WA	WB	b	c	TA	TB	FV	ØFD	FT	FX	FY	FZ	Without Rod Boot		With Rod Boot			
														H	ZZ	Øe	h	l	ZZ
26.7	1/4	5	10.5	25.4	8	4.5	16	60	9	12	80	42	100	51	147	43	59	1/4 Stroke	155
29.7	3/8	8	9.9	31.2	11	5.5	16	70	9	12	90	50	110	58	160	52	66		168
30.7	3/8	9	11.5	31.2	11	5.5	16	86	11.5	15	105	59	130	58	171	52	66		179
36.7	1/2	11	13	37	13	5.5	17	102	13.5	18	130	76	160	71	205	65	80		214
39.7	1/2	13	14	47.3	16	5.5	17	116	13.5	18	150	92	180	72	216	65	81		225

Single Clevis/(C)

Lube Type(AM2C, AM2CF), Non-Lube Type(AM2CN), Air-Hydro Type(AM2CH)

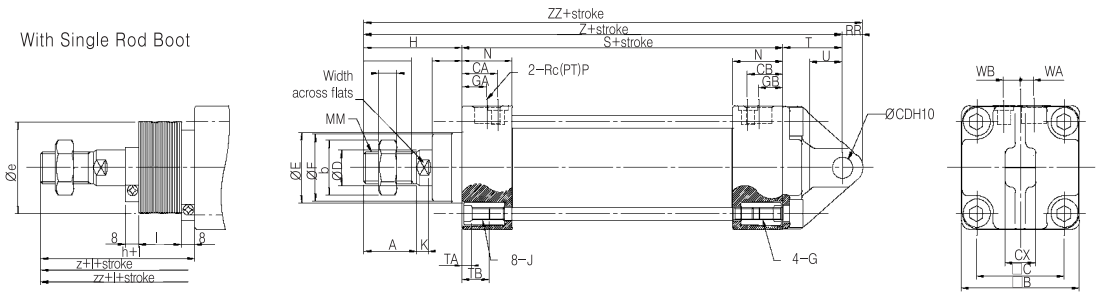

(mm)

Bore size (mm)	Stroke range		Effective length of thread	Width across flats	A	□B	□C	CA	CB	ØD	ØE	ØF	GA	GB	S	MM	G	J	K
	Without Rod Boot	With Rod Boot																	
40	~500	20~500	25	14	28	60	44	18	18	16	32	30	13	13	84	M14×1.5	M6×1.0 DP 18	M6×1.0 DP 22	6
50	~600	20~600	28	18	31	70	52	21	21	20	40	38	14.5	14.5	90	M18×1.5	M8×1.25 DP 18	M8×1.25 DP 24	7
63	~600	20~600	28	18	31	85	64	21	21	20	40	38	15	15	98	M18×1.5	M8×1.25 DP 18	M8×1.25 DP 24	7
80	~750	20~750	33	22	36	102	78	26	26	25	52	50	21	21	116	M22×1.5	M10×1.25 DP 20	M10×1.25 DP 26	10
100	~750	20~750	37	26	40	116	92	28	28	30	52	50	21	21	126	M26×1.5	M10×1.25 DP 20	M10×1.25 DP 26	10

L	N	P	T	WA	WB	b	c	TA	TB	RR	U	ØCD H10		CX		Without Rod Boot			With Rod Boot				
																H	Z	ZZ	Øe	h	l	Z	ZZ
15	26.7	1/4	30	5	10.5	25.4	8	4.5	16	10	16	10	+0.058 / 0	15	−0.1 / −0.3	51	165	175	43	59	1/4 Stroke	173	183
17.7	29.7	3/8	35	8	9.9	31.2	11	5.5	16	12	19	12	+0.070 / 0	18	−0.1 / −0.3	58	183	195	52	66		191	203
17.4	30.7	3/8	40	9	11.5	31.2	11	5.5	16	16	23	16	+0.070 / 0	25	−0.1 / −0.3	58	196	212	52	66		204	220
22.5	36.7	1/2	48	11	13	37	13	5.5	17	20	28	20	+0.084 / 0	31.5	−0.1 / −0.3	71	235	255	65	80		244	264
19	39.7	1/2	58	13	14	47.3	16	5.5	17	25	36	25	+0.084 / 0	35.5	−0.1 / −0.3	72	256	281	65	81		265	290

Double Clevis Type/(D)

Lube type(AM2D, AM2DF), Non-Lube Type(AM2DN), Air-Hydro Type(AM2DH)

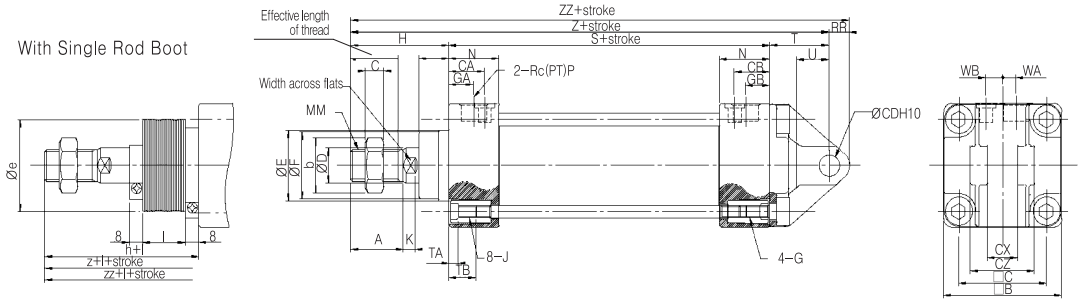

(mm)

Bore size (mm)	Stroke range(mm)		Effective length of thread	Width across flats	A	□B	□C	CA	CB	ØD	ØE	ØF	GA	GB	S	MM	G	J	K
	Without Rod Boot	With Rod Boot																	
40	~500	20~500	25	14	28	60	44	18	18	16	32	30	13	13	84	M14×1.5	M6×1.0 DP 18	M6×1.0 DP 22	6
50	~600	20~600	28	18	31	70	52	21	21	20	40	38	14.5	14.5	90	M18×1.5	M8×1.25 DP 18	M8×1.25 DP 24	7
63	~600	20~600	28	18	31	85	64	21	21	20	40	38	15	15	98	M18×1.5	M8×1.25 DP 18	M8×1.25 DP 26	7
80	~750	20~750	33	22	36	102	78	26	26	25	52	50	21	21	116	M22×1.5	M10×1.25 DP 20	M10×1.25 DP 26	10
100	~750	20~750	37	26	40	116	92	28	28	30	52	50	21	21	126	M26×1.5	M10×1.25 DP 20	M10×1.25 DP 26	10

L	N	P	T	WA	WB	b	c	TA	TB	RR	U	ØCD H10		CX		CZ	Without Rod Boot			With Rod Boot				
																	H	Z	ZZ	Øe	h	l	Z	ZZ
15	26.7	1/4	30	5	10.5	25.4	8	4.5	16	10	16	10	+0.058 / 0	15	+0.3 / +0.1	29.5	51	165	175	43	59	1/4 Stroke	173	183
17.7	29.7	3/8	35	8	9.9	31.2	11	5.5	16	12	19	12	+0.070 / 0	18	+0.3 / +0.1	38	58	183	195	52	66		191	203
17.4	30.7	3/8	40	9	11.5	31.2	11	5.5	16	16	23	16	+0.070 / 0	25	+0.3 / +0.1	49	58	196	212	52	66		204	220
22.5	36.7	1/2	48	11	13	37	13	5.5	17	20	28	20	+0.084 / 0	31.5	+0.3 / +0.1	61	71	235	255	65	80		244	264
19	39.7	1/2	58	13	14	47.3	16	5.5	17	25	36	25	+0.084 / 0	35.5	+0.3 / +0.1	64	72	256	281	65	81		265	290

Center Trunnion Type/(T)

Lube Type(AM2T, AM2TF), Non-lube Type(AM2TN), Air-hydro type(AM2TH)

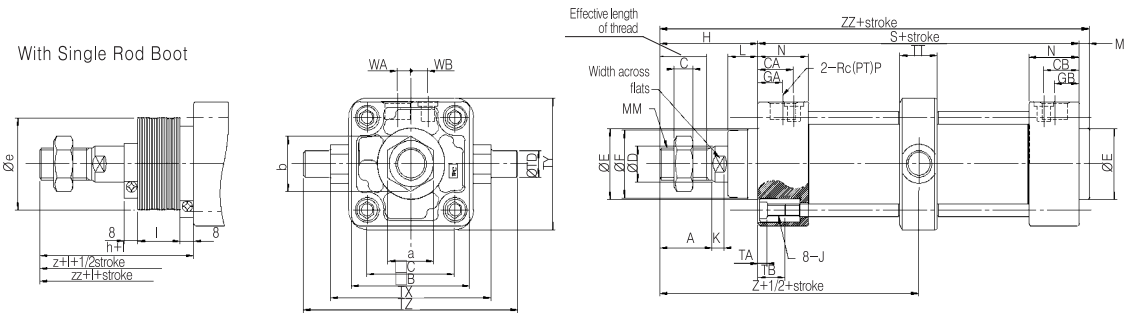

(mm)

Bore size (mm)	Stroke range(mm)		Effective length of thread	Width across flats	A	□B	□C	CA	CB	ØD	ØE	ØF	GA	GB	L	M	N	S	MM	G	K
	Without Rod Boot	With Rod Boot																			
40	~500	20~500	25	14	28	60	44	18	18	16	32	30	13	13	15	5	26.7	84	M14×1.5	M6×1.0 DP 22	6
50	~600	20~600	28	18	31	70	52	21	21	20	40	38	14.5	14.5	17.7	6	29.7	90	M18×1.5	M8×1.25DP 24	7
63	~600	20~600	28	18	31	85	64	21	21	20	40	38	15	15	17.4	6	30.7	98	M18×1.5	M8×1.25DP 24	7
80	~750	20~750	33	22	36	102	78	26	26	25	52	50	21	21	22.5	7	36.7	116	M22×1.5	M10×1.25DP 26	10
100	~750	20~750	37	26	40	116	92	28	28	30	52	50	21	21	19	8	39.7	126	M26×1.5	M10×1.25DP 26	10

P	WA	WB	a	b	c	TA	TB	ØTD e8		TT	TX	TY	TZ	Without Rod Boot			With Rod Boot				
														H	Z	ZZ	Øe	h	l	Z	ZZ
1/4	5	10.5	22	25.4	8	4.5	17	15	−0.032 / −0.059	22	85	62	117	51	93	140	43	59	1/4 Stroke	101	148
3/8	8	9.9	27	31.2	11	5.5	17	15	−0.032 / −0.059	22	95	74	127	58	103	154	52	66		111	162
3/8	9	11.5	27	31.2	11	5.5	17	18	−0.032 / −0.059	28	110	90	148	58	107	162	52	66		115	170
1/2	11	13	32	37	13	5.5	18	25	−0.040 / −0.073	34	140	110	192	71	129	194	65	80		138	203
1/2	13	14	41	47.3	16	5.5	18	25	−0.040 / −0.073	40	162	130	214	72	135	206	65	81		144	215

Rod End Nut(Standard accessories)

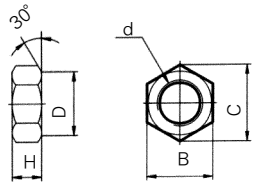

Material : Rolled steel

Part No.	Applicable bore	d	H	B	C	D
TNT-04	40	M14×1.5	8	22	25.4	21
TNT-05	50 · 60	M18×1.5	11	27	31.2	26
TNT-08	80	M22×1.5	13	32	37.0	31
TNT-10	100	M26×1.5	16	41	47.3	39

Knuckle Joint Pin/Clevis Pin

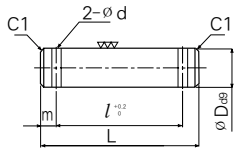

Material : Carbon steel

Part No	Bore Size		ø Dd9	L	l	m	ø d	Applicable split pin ø × l
	CLEVIS	KNUCKLE						
TCDP-2	ø40	–	$10^{-0.040}_{-0.076}$	45.2	37.2	4	ø3	ø3×18l
TCDP-3	ø50	ø40·50·60	$12^{-0.050}_{-0.093}$	54.3	46.3	4	ø3	ø3×18l
TCDP-4	ø63	–	$16^{-0.050}_{-0.093}$	70	60	5	ø4	ø4×24 l
TCDP-5	–	ø80	$18^{-0.040}_{-0.076}$	76	66	5	ø4	ø4×25l
TCDP-6	ø80	ø100	$20^{-0.065}_{-0.117}$	82	72	5	ø4	ø4×36 l
TCDP-7	ø100	–	$25^{-0.065}_{-0.117}$	87.5	77.5	5	ø4	ø4×36l

I Type Single Knuckle Joint

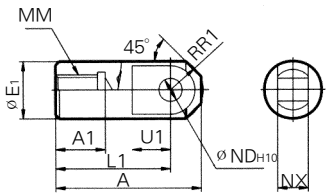

Material : Free cutting sulfur steel

Part No.	Applicable bore	A	A1	ø E1	L1	MM	R1	U1	ø ND H10	NX
TI-04	ø40	69	22	24	55	M14×1.5	15.5	20	$12^{+0.070}_{0}$	$16^{-0.1}_{-0.3}$
TI-05	ø50 · ø63	74	27	28	60	M18×1.5	15.5	20	$12^{+0.070}_{0}$	$16^{-0.1}_{-0.3}$
TI-08	ø80	91	37	36	71	M22×1.5	22.5	26	$18^{+0.070}_{0}$	$28^{-0.1}_{-0.3}$
TI-10	ø100	105	37	40	83	M26×1.5	24.5	28	$20^{+0.084}_{0}$	$30^{-0.1}_{-0.3}$

Y Type Double Knuckle Joint

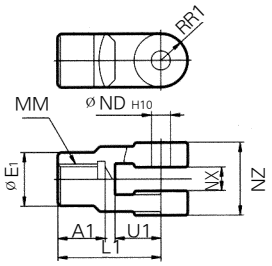

Cast iron

Part No.	Applicable bore	A1	ø E1	L1	MM	R1	U1	ø ND H10	NX	NZ
TY-04A	ø40	22	24	55	M14×1.5	13	25	$12^{+0.070}_{0}$	$16^{+0.3}_{+0.1}$	38
TY-05A	ø50 · ø63	27	28	60	M18×1.5	15	27	$12^{+0.070}_{0}$	$16^{+0.3}_{+0.1}$	38
TY-08A	ø80	37	36	71	M22×1.5	19	28	$18^{+0.070}_{0}$	$28^{+0.3}_{+0.1}$	55
TY-10A	ø100	37	40	83	M26×1.5	21	38	$20^{+0.084}_{0}$	$30^{+0.3}_{+0.1}$	61

Trunnion Bracket

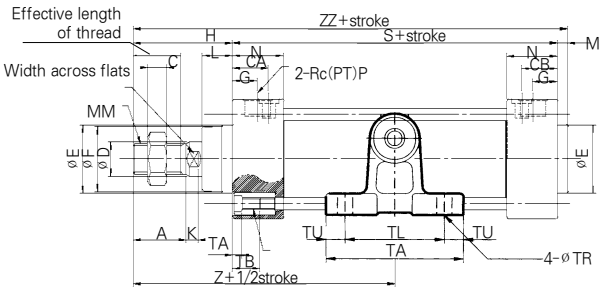

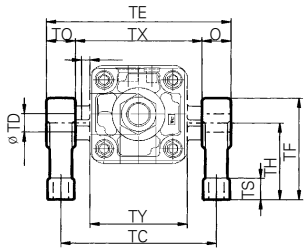

Part No.	Applicable bore	TA	TL	TU	TC	TX	TE	TO	ϕ TR	ϕ TT	TS	TH	TF	TY	W1	Z	ϕ TD-H10
TCA2-S04	ϕ40	80	60	10	102	85	119	17	9	17	12	45	60	62	10	93	$15^{+0.070}_{0}$
	ϕ50	80	60	10	112	95	129	17	9	17	12	45	60	74	10	103	$15^{+0.070}_{0}$
TCA2-S06	ϕ63	100	70	15	130	110	150	20	11	22	14	55	73	90	10	107	$18^{+0.070}_{0}$
TCA2-S08	ϕ80	120	90	15	166	140	192	26	13.5	24	17	75	100	110	12	129	$25^{+0.084}_{0}$
	ϕ100	120	90	15	188	162	214	26	13.5	24	17	75	100	130	12	135	$25^{+0.084}_{0}$

With Auto Switch

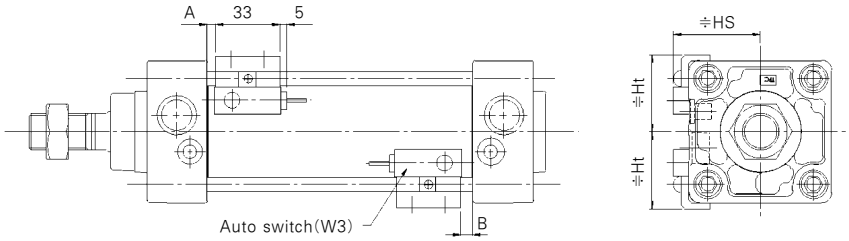

(mm)

Part No. of Auto switch	Mounting position of Auto switch	Position				
		ø40	ø50	ø63	ø80	ø100
W3	A	0(0)	0(0)	0(2.5)	2(6)	4(7.5)
	B	1(0)	1(0)	5(1.5)	8(4)	10(6.5)
	Hs	37	41	46	53	61
	Ht	31	35	42	50	57

※ ( ) is for long stroke, Non-Lube and Low Pressure Hydro.
Mounting possible for Foot & Front Flange.

Minimum Stroke of Attaching Auto Switch

n:Number of Auto Switch

Part No. of Auto switch	Number of Auto switch	Mounting Bracket for Auto switch	Center Trunnion Type			
			ø40, ø50	ø63	ø80	ø100
W3	2 pcs(same,across flats) 1 pcs	15	90	100	110	120
	n pcs(same flats)	15+55 $\left(\frac{n-2}{2}\right)$ n=1, 2, 3, 4,···	90+100 $\left(\frac{n-4}{2}\right)$ n=4, 8, 12, 16, ···	100+55 $\left(\frac{n-4}{2}\right)$ n=4, 8, 12, 16, ···	110+55 $\left(\frac{n-4}{2}\right)$ n=4, 8, 12, 16, ···	120+55 $\left(\frac{n-4}{2}\right)$ n=4, 8, 12, 16, ···

List of Improved parts No.

Item	Before	After	비 고
	AM Series	AM2 Series	
1	Head Cover	Changing Appearance	
	Rod Cover	Changing Appearance	
2	Cushion Packing	fixed ⇒ Pre Flow	
3	Nut (fix Tierod)	Hex Nut ⇒ Socket Nut	
4	Stop Ring	Addition	
5	Tie Rod	Changing length	
6	Air is supplied to just section of cushion ring When it's out of cushion range, flow rate is increased suddenly and cracking pressure is being low so that unstable acting is happened.	Air is supplied to section of cushion ring and piston, which prohibits sudden starting (Check Seal Cushion)	

Chatacteristics

■ **Merits**

① Compact design and effect of protecting danger with Tie-rod socket.
② Applying check seal cushion for improving cushion.
③ Sinking of piston rod is prohibited by better bush.

A. Capability

Cushion packing is changed DSM fixed type to floatiing seal type, so capability of cushion is promoted through protecting sudden start.

① Easy Maintenance.
② Protection of partial side wear and maintenance of endurance (4~5 times as AM)
③ Quick cycle time , minimum pressure drop.

B. Appearance

① Design for intensive cover
② Socket of Tie-rod
③ Applying stop ring for safety of cushion valve

C. Dimensions

Out-Diameter of Tie-rod is smaller so that mounting dimension is competible except related parts(Trunnion, long stroke ring) comparing with AM cylinder.

Possible to order

	1	2	3	4	5	6	7	8	9	10	11	12
Type	Lube	Non-Lube	Low pressure hydro	Steel Tube	Non-Rotating	Double Rod	Adjustable Stroke/ Extension Adjustable type	Adjustable Stroke/ Retraction Adjustable type	Dual/ Single Rod	Dual/ Double Rod	Powerful Scraper	Powerful Rod
Symbol		N	H	F	K	W	XC8	XC9	XC11	XC10	XC4	XB5
AM	◆	◆	◆	◆	◆	◆	◆	◆	◆	◆	◆	◆
AM2	◆	◆	⊙	◆	⊙	◆	◆	◆	◆	◆	⊙	⊙

13	14	15	16	17	18	19	20	Total
End Lock	Tandum	High Temperature	Rod Stainless	Coil Scraper	Front Flange	Intense-Magnetism-Resistance type	Copper-free	
X105	XC12	XB6	XC6	X104	H	P	XC16	
◆	◆	◆	◆	◆	◆	◆	◆	20type
⊙	⊙	◆	◆	⊙	◆	⊙	◆	14type

◆ : Possible to produce
⊙ : Contact to us

Series AL/ALX

Air Cylinder

Bore size: ø125, ø140, ø160, ø180, ø200, ø250, ø360

- MAKE A WIDE STROKE AND BORE
- LONG LIFE AND HIGH SPEED OPERATION POSSIBLE
- BUILT-IN AIR CUSHION

Symbol

How to Order

AL X D L N 160 – 300 RJ – – W3

1 2 3 4 5 6 7 8 9 10 11 12

1 Air Cylinder

2 Model Series
- Blank : ø125, ø140, ø160, ø180, ø200, ø250, ø300 : Nose Separator
- X : ø125, ø140, ø160 : Nose Solid

3 Magnet
- Blank : Without Magnet
- D : Built-in Magnet (ALX125,140,160 only)

4 Mounting
- B : Basic
- L : Foot
- F : Rod Side Flange
- G : Head Side Flange
- C : Single Rear Clevis
- D : Double Rear Clevis
- T : Center Trunnion

5 Tube Material

ø125~ø160
- Blank : Aluminum Tube
- F : Iron Tube

ø180~ø300
- Blank : Iron Tube(Standard)

※ Iron Tube:Not available Auto switch

6 Type
- Blank : Lubricated
- N : Non-Lube
- H : Air-Hydro(Except Series ALX)

7 Bore Size
- 125 : 125mm
- 140 : 140mm
- 160 : 160mm
- 180 : 180mm
- 200 : 200mm
- 250 : 250mm
- 300 : 300mm

8 Stroke (mm)
- 125 : ~1,000
- 140 : ~1,000
- 160 : ~1,200
- 180~300 : ~2,000

9 Suffix Symbol for Cylinder
- Blank : Without Gaiter /Both End Air Cushion
- J : Nylan Tarpoulin
- K : Neoprene Cloth
- R : Rod end Air Custion
- H : Head end Air Custion
- N : Non-Cushion

10 Series
- Blank : Standard Type
- XC16 : Copper-Free

11 Applicable auto switch
- Blank : None
- W3 : Reed Switch Type (AC110V, 220V, DC24V)

Standard Auto Switch Lead wire Length is 0.5m

12 Number of Switch
- Blank : 2 pcs.
- S : 1 pc.
- 3 : 3 pcs.
- n : n pcs.

Specification

Type	Lube, Non-Lube	Air-Hydro
Fluid	Air	L.P.Oil
Proof Pressure	16kgf/cm²{1600kpa}{15.7MPa}	
Max.Operating Pressure	9.9kgf/cm²{900kPa}{0.97MPa}	
Min.Operating Pressure	0.5kgf/cm²(0.05MPa)	0.6kgf/cm²(0.06MPa)
Ambient and Fluid Temperature	5~60℃	
Piston Speed	50~500mm/s	0.5~200mm/s
Cushion	With Coushion	Non Cushion
Stroke Tolerance (mm)	~250st$^{+1.0}_{0}$, 251~1000st$^{+1.4}_{0}$, 1001~1500st$^{+1.8}_{0}$	
Mounting	Basic, Foot, Front flange, Rear flange, Single clevis, Double clevis, Center trunnion	

Parts No. of Mounting Bracket

Bore size	ø125	ø140	ø160	ø180	ø200	ø250	ø300
Foot	TCS1L125	TCS1L140	TCS1L160	TCS1L180	TCS1L200	TCS1L250	TCS1L300
Flange	TCS1F125	TCS1F140	TCS1F160	TCS1F180	TCS1F200	TCS1F250	TCS1F300
Single Clevis	TCS1C125	TCS1C140	TCS1C160	TCS1C180	TCS1C200	TCS1C250	TCS1C300
Double Clevis	TCS1D125	TCS1D140	TCS1D160	TCS1D180	TCS1D200	TCS1D250	TCS1D300

Model

Model	Type	Action	Seal	Bore size(mm)
AL	Lubricated	Double	O-ring	125, 140, 160, 180
ALN	Non-lube type	Double	Special	200, 250, 300
ALH	Air-hydro type	Double	Special	125, 140, 160

※ Series ALX : ø125, ø140, ø160

Weight/Aluminum Tube : Lubricated(Non-Lube, Air-Hydro) (kgf)

Bore Size(mm)		125	140	160
Standard Weight	Basic Type	14.85(13.73)	17.98(16.57)	24.77(23.03)
	Foot Type	16.48(15.36)	20.50(19.09)	27.57(25.83)
	Rod-Side Flange Type	17.53(16.41)	22.98(21.57)	31.16(29.42)
	Head-Side Flange Type	17.53(16.41)	22.98(21.57)	31.16(29.42)
	Single Rear Clevis Type	17.92(16.80)	22.27(20.86)	30.26(28.52)
	Double Rear Clevis Type(With pin)	18.38(17.26)	23.02(21.61)	31.11(29.37)
	Trunnion Type	18.98(17.86)	23.71(22.30)	32.17(30.43)
Extra Weight per 100 Strokes		1.77	1.96	2.39
Accessory Fittings	Single Knuckle	0.91	1.16	1.56
	Double Knuckle(With pin)	1.37	1.81	2.48

※ ( ): In parentheses are for Non-Lubetype, Air-Hydro Type
Calculation Example : ALL 160-500
- Basic Weight …27.57 (Foot type, ø160)
- Additional Weight …2.39/100 Stroke
- Cylinder Stroke…500stroke
  27.57+2.39×500/100=39.52kgf

Weight/Iron Tube

(kgf)

Bore size(mm)		125	140	160	180	200	250	300
Standard Weight	Basic Type	15.20	18.38	25.24	34.16	42.66	79.78	115.94
	Foot Type	16.83	20.90	28.04	38.36	47.54	89.28	133.22
	Rod-side Flange Type	17.88	23.38	31.63	43.99	54.57	101.62	146.14
	Head-side Flange Type	17.88	23.38	31.63	43.99	54.57	101.62	146.14
	Single Rear Clevis Type	18.27	22.67	30.73	42.55	52.56	98.17	149.22
	Double rear Dlevis Type(With pin)	18.73	23.42	31.58	44.23	54.59	101.36	154.96
	Trunnion Type	19.33	24.11	32.64	44.78	56.65	107.62	156.37
Extra Weight per 100 Strokes		2.66	3.01	3.58	4.95	5.75	9.08	12.15
Accessory Fittings	Single Knuckle	0.91	1.16	1.56	3.07	2.90	5.38	10.82
	Double Knuckle(With pin)	1.37	1.81	2.48	7.47	4.59	9.22	17.17

Gaiter/Material

Symbol	Material	Max. ambient temperature
J	Nylon tarpaulin	60℃
K	Neoprene cloth	※110℃

※ For Rod Boot

Cautions

(1)When connecting piping,securely flush the piping to eliminate dust and chips from the cylinder
(2)During operation, load should be applied constantly to the piston rod in the axial direction.
(3)Don't scratch and hit the sliding section of the piston rod. The damage causes packing damage to induce leakage.
(4)Use turbine oil No. 1(ISO VG32) for lubrication. Avoid machine oil and spindle oil.

Construction/Parts List (AL)

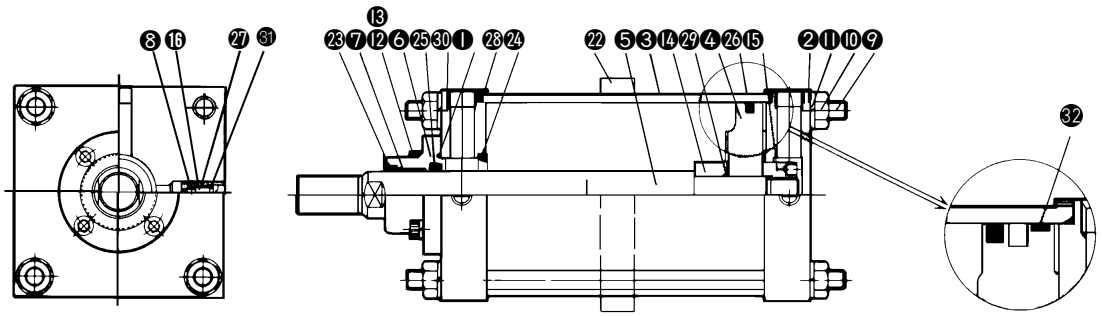

Main Parts

No.	Description		Material	Note
❶	Rod Cover		#Rolled Steel	≒Black paint
❷	Head Cover		#Rolled Steel	≒Black paint
❸	Cylinder Tube	ø125	Aluminum Alloy	Hard alumite
		ø140～ø300	Carbon Steel	Hard chrome planted
❹	Piston		Cast Iron	
❺	Piston Rod		Carbon Steel	Hard chrome planted
❻	Nose		Cast Iron	
❼	Bush		Lead Bronze Casting	
❽	Valve Guide		Brass	
❾	Tie Rod		Carbon Steel	Uni-chromate
❿	Tie Rod Nut			
⓫	Spring Washer		Steel Wire	Black zinc chromate
⓬	Nose Cap Screw		Chrome-Molybdeum Steel	Black zinc chromate
⓭	Spring Washer		Steel Wire	Black zinc chromate
⓮	Cushion Piece A		Rolled Steel	Kani-zen plated
⓯	Cushion Piece B		Rolled Steel	Kani-zen plated
⓰	Cushion Needle		Rolled Steel	Kani-zen plated
⓱	※ Space A		Rolled Steel	Zinc chromate
⓲	※ Space B		Rolled Steel	Zinc chromate
⓳	※Air Exhaust Valve A		Rolled Steel	Zinc chromate
⓴	※Air Exhaust Valve B		Chrome-molybdenum Steel	
㉑	※Check Ball		Chrome Bearing Steel	
㉒	Tie rod Reinforcing Ring		Rolled Steel	Black paint
㉜	Wear Ring		Resin	

#For AL series : Aluminum alloy
≒ For AL seeries : Silver paint
※ For Air-hydro type
★ Available only for long stroke

Seals

No.	Description	Material	Pars No. 125	140	160	180	200	250	300
Lube Type									
㉓	Wiper Ring	NBR	SDR-36	SDR-36	SDR-36	SDR-36	SDR-36	SDR-36	SDR-36
㉔	Cushion Seal	NBR	DSM-50	DSM-50	DSM-50	DSM-60	SMS-36	DSM-75	DSM-85 DMS-75
㉕	Rod Seal	NBR	PNY-36	PNY-36	PNY-40	PNY-45	PNY-50	PNY-60	PNY-70
㉖	Piston Seal	NBR	P115	P130	P150	P165	P185	P235	P238
㉗	Cushion Valve Seal	NBR	P7	P7	P7	P7	P7	P7	P7
㉘	Tube Gasket	NBR	C120	C130	C155	C175	C195	CS160-168-G4	CS160-168
㉙	Piston Gasket	NBR	G25	G25	G25	G35	G35	G45	G45
㉚	Nose Gasket	NBR	G55	G55	G55	G65	G65	G80	G90
㉛	Guide Gasket	NBR	CA50-1670	CA50-1670	CA50-1670	CA50-1670	CA50-1670	CA50-1670	CA50-1670

Non-Lube Type

Same as lube type except ㉕ and ㉖

	Description	Material	125	140	160	180	200	250	300
㉕	Rod Seal	NBR	PNY-36	PNY-36	PNY-40	PNY-45	PNY-50	PNY-60	PNY-70
㉖	Piston Seal	NBR	NLP-125A	NLP-140A	NLP-160A	NLP-180A	NLP-200A	NLP-250A	NLP-300A

Air-Hydro Type

Same as lube type except ㉕ and ㉖

No.	Description	Material	Parts. No. 125	140	160
㉕	Rod Seal	NBR	SKY-36	SKY-36	SKY-40
㉖	Piston Seal	NBR	RPS-125	RPS-140	RPS-160

Basic Type/(ALB)

Lube Type(ALB), Non-Lube Type(ALBN), Air-Hydro Type(ALBH)

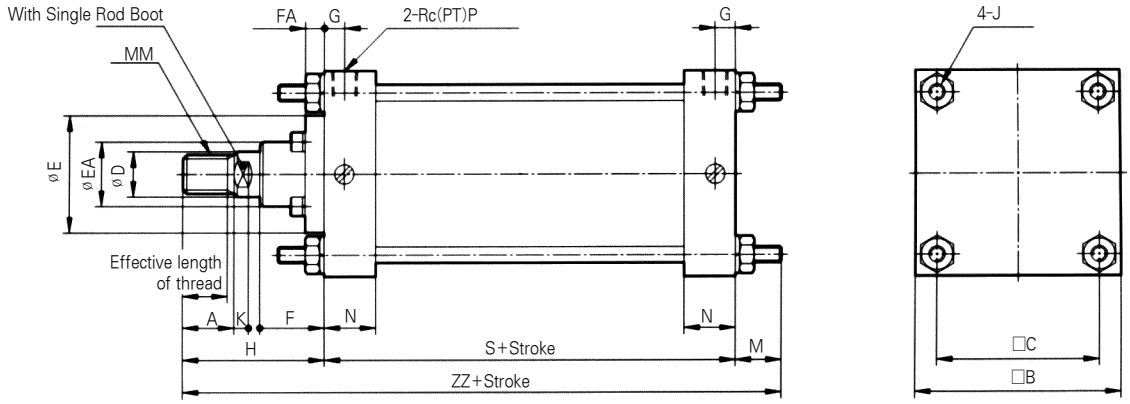

With Single Rod Boot

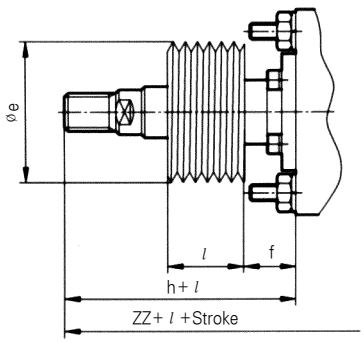

(mm)

Type	Bore size (mm)	※Stroke range (mm)	Effective length thread	A	□B	□C	ø D	ø E	ø EA	F	FA	G	J	K	M	MM	N	P	S
Lube	**125**	~1,000	47	50	145	115	36	90	59	43	14	16	M14×1.5	15	27	M30×1.5	35	1/2	98
Non-Lube	**140**	~1,000	47	50	161	128	36	90	59	43	14	16	M14×1.5	15	27	M30×1.5	35	1/2	98
Air-Hydro	**160**	~1,200	53	56	182	144	40	90	59	43	14	18.5	M16×1.5	17	30.5	M36×1.5	39	3/4	106
	180	~1,200	60	63	204	162	45	115	70	48	17	18.5	M18×1.5	20	35	M40×1.5	39	3/4	111
Lube	**200**	~1,200	60	63	226	182	50	115	74	48	17	18.5	M20×1.5	20	35	M45×1.5	39	3/4	111
Non-Lube	**250**	~1,200	67	71	277	225	60	140	86	60	20	23	M24×1.5	25	41.5	M56×2	49	1	141
	300	~1,200	76	80	330	270	70	140	96	60	20	23	M30×1.5	30	51.5	M64×2	49	1	146

Type	Bore size (mm)	Without Rod Boot		With Rod Boot					With Actoss Flat
		H	ZZ	ø e	f	h	l	ZZ_1	
Lube	**125**	110	235	★75	40	133		258	31
Non-Llube	**140**	110	235	★75	40	133	0.2Stroke	258	31
Air-Hydro	**160**	120	256.5	★75	40	141		277.5	36
	180	135	281	85	45	153	0.2Stroke	299	41
Lube	**200**	135	281	90	45	153		299	46
Non-lube	**250**	160	342.5	105	55	176	0.17Stroke	358.5	56
	300	175	372.5	115	55	190		387.5	65

※ Minimum stroke sith Rod Boot:30mm or more
★ Rod Boot material:neoprene cloth-80mm or more

Foot Type/(ALL)

Lube Type(ALL), Non-Lube Type(ALLN), Air-Hydro Type(ALLH)

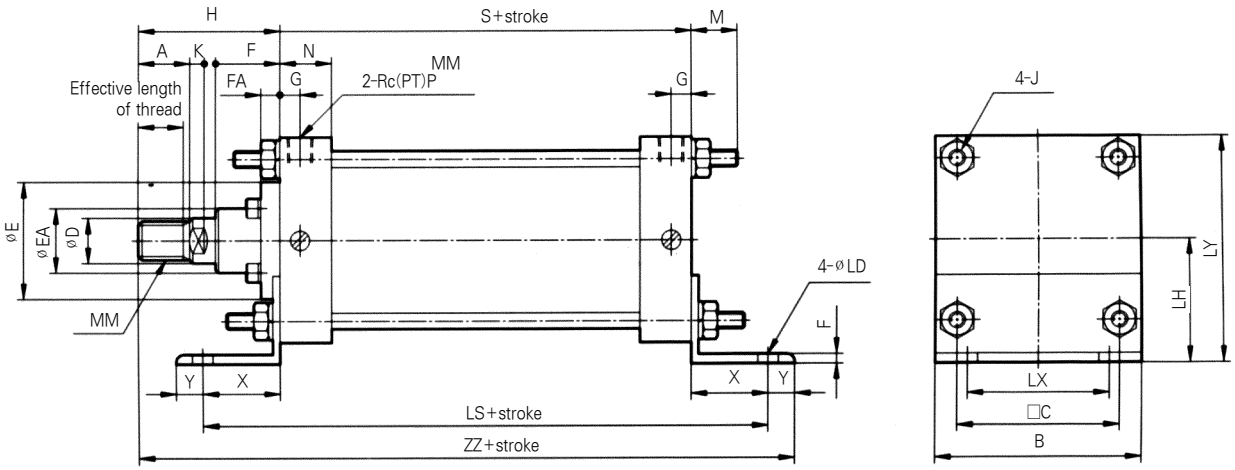

With Single Rod Boot

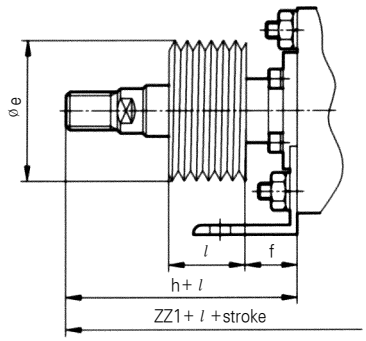

(mm)

Type	Bore size (mm)	※Stroke range (mm)	Effective length thread	A	B	□C	øD	øE	øEA	F	FA	G	J	K	MM	N	P	S
Lube	**125**	~1,400	47	50	145	115	36	90	59	43	14	16	M14×1.5	15	M30×1.5	35	1/2	98
Non-Lube	**140**	~1,400	47	50	161	128	36	90	59	43	14	16	M14×1.5	15	M30×1.5	35	1/2	98
Air-Hydro	**160**	~1,400	53	56	182	144	40	90	59	43	14	18.5	M16×1.5	17	M36×1.5	39	3/4	106
	180	~1,800	60	63	204	162	45	115	70	48	17	18.5	M18×1.5	20	M40×1.5	39	3/4	111
Lube	**200**	~1,800	60	63	226	182	50	115	74	48	17	18.5	M20×1.5	20	M45×1.5	39	3/4	111
Non-Lube	**250**	~2,000	67	71	277	225	60	140	86	60	20	23	M24×1.5	25	M56×2	49	1	141
	300	~2,000	76	80	330	270	70	140	96	60	20	23	M30×1.5	30	M64×2	49	1	146

Type	Bore size (mm)	X	Y	øLD	LH	LS	LT	LX	LY	Without Rod Boot		With Rod Boot				
										H	ZZ	øe	f	h	*l*	ZZ1
Lube	**125**	45	20	19	85	188	8	100	157.5	110	273	★75	40	133		296
Non-Lube	**140**	45	30	19	100	188	9	112	180.5	110	283	★75	40	133	0.2Stroke	306
Air-Hydro	**160**	50	25	19	106	206	9	118	197	120	301	★75	40	141		322
	180	60	30	24	125	231	10	132	227	135	336	85	45	153	0.2Stroke	354
Lube	**200**	60	30	24	132	231	10	150	245	135	336	90	45	153		354
Non-Lube	**250**	80	40	29	160	301	12	180	298.5	160	421	105	55	176	0.17Stroke	437
	300	90	40	33	200	326	15	212	365	175	451	115	55	190		466

※ Minimum stroke sith Rod Boot:30mm or more

★ Rod Bootr material:neoprene cloth-80mm

Long Stroke:Front Flange Type(ALL)

Lube(ALF), NON-Lube(ALFN)Air-Hydro(ALFH)

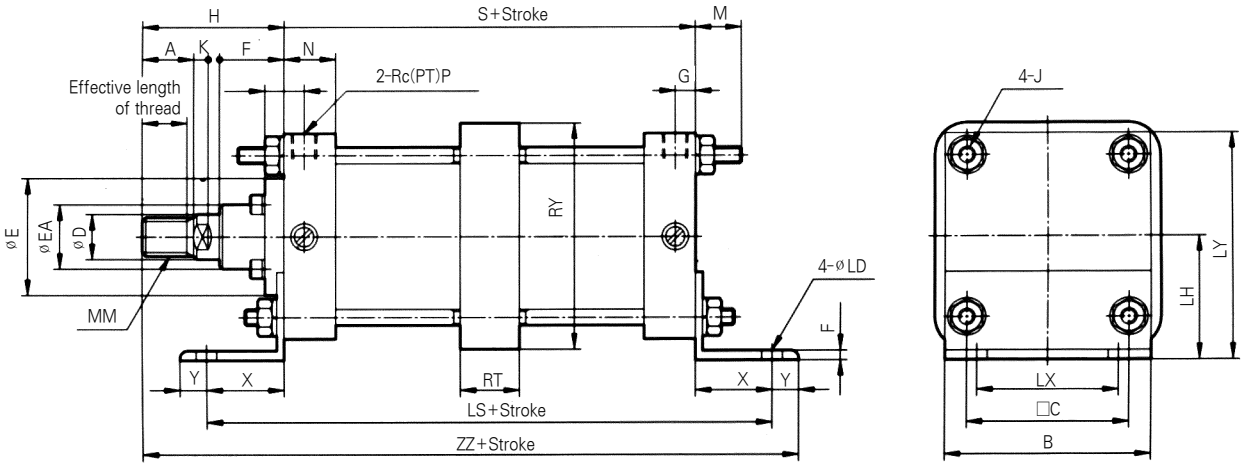

With Single Rod Boot

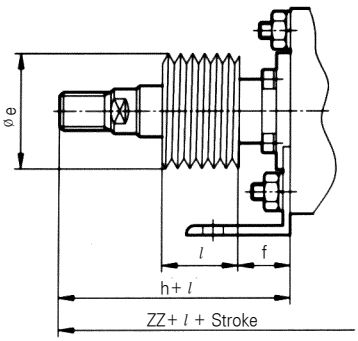

(mm)

Type	Bore size (mm)	Stroke range	Effective length thread	A	B	□C	ø D	ø E	ø EA	F	FA	G	J	K	MM	N	P	S
Lube	**125**	1,401~1,600	47	50	145	115	36	90	59	43	14	16	M14×1.5	15	M30×1.5	35	1/2	98
Non-Lube	**140**	1,401~1,600	47	50	161	128	36	90	59	43	14	16	M14×1.5	15	M30×1.5	35	1/2	98
Air-Hydro	**160**	1,401~1,600	53	56	182	144	40	90	59	43	14	18.5	M16×1.5	17	M36×1.5	39	3/4	106
	180	1,801~2,000	60	63	204	162	45	115	70	48	17	18.5	M18×1.5	20	M40×1.5	39	3/4	111
Lube	**200**	1,801~2,000	60	63	226	182	50	115	74	48	17	18.5	M20×1.5	20	M45×1.5	39	3/4	111
Non-Lube	**250**	2,001~2,400	67	71	277	225	60	140	86	60	20	23	M24×1.5	25	M56×2	49	1	141
	300	2,001~2,400	76	80	330	270	70	140	96	60	20	23	M30×1.5	30	M64×2	49	1	146

Type	Bore size (mm)	Stroke range	Y	ø LD	LH	LS	LT	LX	LY	RT	RY	Without Rod Boot		With Rod Boot				
												H	ZZ	ø e	f	h	l	ZZ_1
Lube	**125**	45	20	19	85	188	8	100	157.5	50	164	110	273	★75	40	133		296
Non-Lube	**140**	45	30	19	100	188	9	112	180.5	55	184	110	283	★75	40	133	0.2Stroke	306
Air-Hydro	**160**	50	25	19	106	206	9	118	197	60	204	120	301	★75	40	141		322
	180	60	30	24	125	231	10	132	227	59	228	135	336	85	45	153	0.2Stroke	354
Lube	**200**	60	30	24	132	231	10	150	245	59	257	135	336	90	45	153		354
Non-Lube	**250**	80	40	29	160	301	12	180	298.5	69	325	160	421	105	55	176	0.17Stroke	437
	300	90	40	33	200	326	15	212	365	79	390	175	451	115	55	190		466

★ Rod Boot material:neoprene cloth-80mm

Rod Side Flange Type(ALF)

Lube Type(ALF), Non-Lube Type(ALFN), Air-Hydro Type(ALFH)

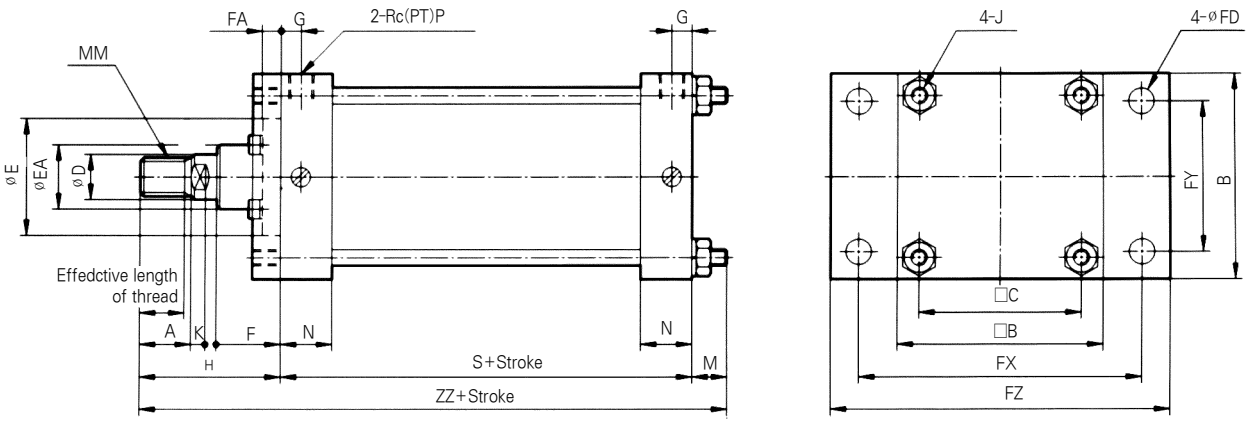

With Single Rod Boot

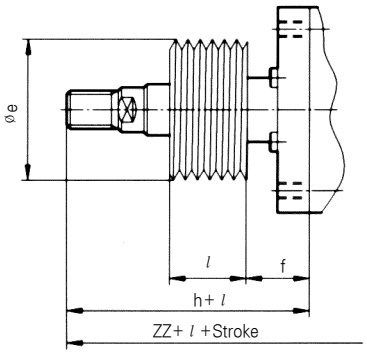

(mm)

Type	Bore size (mm)	※Stroke range	Effective length thread	A	B	□B	□C	ØD	ØE	ØEA	F	FA	G	J	K	M	MM	N	P	S
Lube	**125**	~1,400	47	50	145	145	115	36	90	59	43	14	16	M14×1.5	15	30	M30×1.5	35	1/2	98
Non-Lube	**140**	~1,400	47	50	160	161	128	36	90	59	43	14	16	M14×1.5	15	24	M30×1.5	35	1/2	98
AirHydro	**160**	~1,400	53	56	180	182	144	40	90	59	43	14	18.5	M16×1.5	17	26	M36×1.5	39	3/4	106
	180	~1,800	60	63	200	204	162	45	115	70	48	17	18.5	M18×1.5	20	31	M40×1.5	39	3/4	111
Lube	**200**	~1,800	60	63	225	226	182	50	115	74	48	17	18.5	M20×1.5	20	31	M45×1.5	39	3/4	111
Non-Lube	**250**	~2,000	67	71	275	277	225	60	140	86	60	20	23	M24×1.5	25	35	M56×2	49	1	141
	300	~2,000	76	80	330	330	270	70	140	96	60	20	23	M30×1.5	30	48	M64×2	49	1	146

Type	Bore size (mm)	ØFD	FT	FX	FY	FZ	Without Rod Boot		With Rod Boot				
							H	ZZ	Øe	f	h	*l*	ZZ_1
Lube	**125**	19	14	190	100	230	110	238	★75	40	133		261
Non-Lube	**140**	19	20	212	112	255	110	232	★75	40	133	0.2Stroke	255
Air-Hydro	**160**	19	20	236	118	275	120	252	★75	40	141		273
	180	24	25	265	132	320	135	277	85	45	153	0.2Stroke	295
Lube	**200**	24	25	280	150	335	135	277	90	45	153		295
Non-Lube	**250**	29	30	355	180	420	160	336	105	55	176	0.17Stroke	352
	300	33	30	400	212	475	175	369	115	55	190		384

※ Minimun stroke with Rod Boot 30mm or more
★ Rod → Boot material : neoprene cloth-80mm

Long Stroke : Foot Flange Type(ALF)

Lube Type(ALF), Non-Lube Type(ALFN), Air-Hydro Type(ALFH)

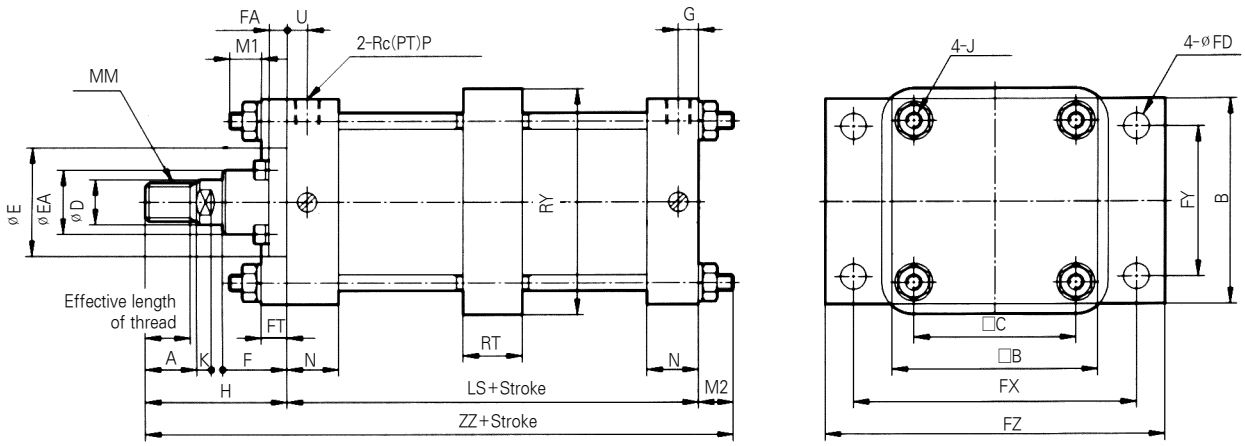

With Single Rod Boot

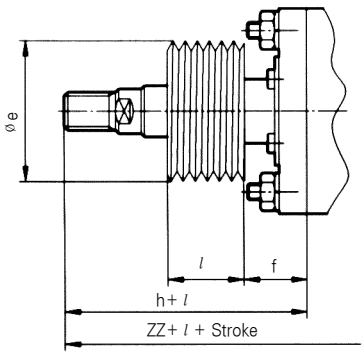

(mm)

Type	Bore-size (mm)	※Stroke range (mm)	Effective length thread	A	B	□B	□C	ØD	ØE	ØEA	F	FA	G	J	K	M_1	M_2	MM	N	P	S
Lube	**125**	1,401~1,600	47	50	145	145	115	36	90	59	43	14	16	M14×1.5	15	22	22	M30×1.5	35	1/2	98
Non-Lube	**140**	1,401~1,600	47	50	160	161	128	36	90	59	43	14	16	M14×1.5	15	19	19	M30×1.5	35	1/2	98
Air-Hydro	**160**	1,401~1,600	53	56	180	182	144	40	90	59	43	14	18.5	M16×1.5	17	22	22	M36×1.5	39	3/4	106
	180	1,801~2,000	60	63	200	204	162	45	115	70	48	17	18.5	M18×1.5	20	26	26	M40×1.5	39	3/4	111
Lube	**200**	1,801~2,000	60	63	225	226	182	50	115	74	48	17	18.5	M20×1.5	20	26	26	M45×1.5	39	3/4	111
Non-Lube	**250**	2,001~2,400	67	71	275	277	225	60	140	86	60	20	23	M24×1.5	25	30	30	M56×2	49	1	141
	300	2,001~2,400	76	80	330	330	270	70	140	96	60	20	23	M30×1.5	30	36	36	M64×2	49	1	146

Type	Bore-size (mm)	ØFD	FT	FX	FY	FZ	RT	RY	Without Rod Boot H	Without Rod Boot ZZ	With Rod Boot Øe	With Rod Boot f	With Rod Boot h	With Rod Boot l	With Rod Boot ZZ_1
Lube	**125**	19	14	190	100	230	50	164	110	230	★75	40	133	0.2Stroke	253
Non-Lube	**140**	19	20	212	112	255	55	184	110	227	★75	40	133		250
Air-Hydro	**160**	19	20	236	118	275	60	204	120	248	★75	40	141		269
	180	24	25	265	132	320	59	228	135	272	85	45	153	0.2Stroke	290
Lube	**200**	24	25	280	150	335	59	257	135	272	90	45	153		290
Non-Lube	**250**	29	30	355	180	420	69	325	160	331	105	55	176	0.17Stroke	347
	300	33	30	400	212	475	79	390	175	357	115	55	190		372

※ Rod Boot material : neoprene cloth-80mm or more

★ Rod Boot material:neoprene cloth-80mm or more

Head Side Flange Type(ALG/ALXG)

Lube Type(ALG), Non-LubeType(ALGN), Air-Hydro Type(ALGH)

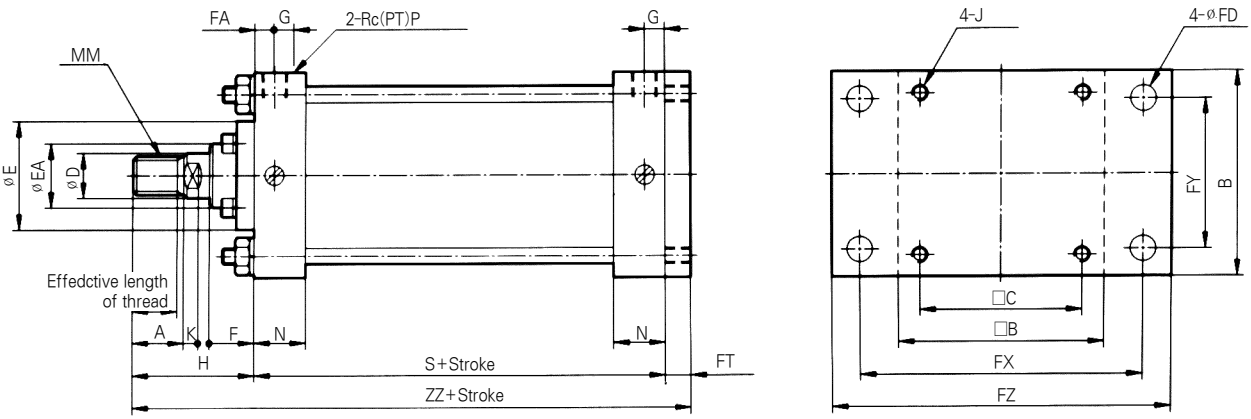

With Single Rod Boot

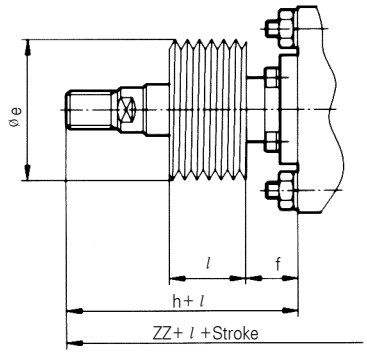

(mm)

Type	Bore size (mm)	※Stroke range	Effective length thread	A	B	□B	□C	ø D	ø E	ø EA	F	FA	G	J	K	MM	N	P	S
Lube	**125**	~1000	47	50	145	145	115	36	90	59	43	14	16	M14×1.5	15	M30×1.5	35	1/2	98
Non-Lube	**140**	~1000	47	50	160	161	128	36	90	59	43	14	16	M14×1.5	15	M30×1.5	35	1/2	98
Air-Hydro	**160**	~1200	53	56	180	182	144	40	90	59	43	14	18.5	M16×1.5	17	M36×1.5	39	3/4	106
	180	~1200	60	63	200	204	162	45	115	70	48	17	18.5	M18×1.5	20	M40×1.5	39	3/4	111
Lube	**200**	~1200	60	63	225	226	182	50	115	74	48	17	18.5	M20×1.5	20	M45×1.5	39	3/4	111
Non-Lube	**250**	~1200	67	71	275	277	225	60	140	86	60	20	23	M24×1.5	25	M56×2	49	1	141
	300	~1200	76	80	330	330	270	70	140	96	60	20	23	M30×1.5	30	M64×2	49	1	146

Type	Bore size (mm)	ø FD	FT	FX	FY	FZ	Without Rod Boot		With Rod Boot				
							H	ZZ	ø e	f	h	l	ZZ_1
Lube	**125**	19	14	190	100	230	110	222	★75	40	133	0.2Stroke	245
Non-Lube	**140**	19	20	212	112	255	110	228	★75	40	133		251
Air-Hydro	**160**	19	20	236	118	275	120	246	★75	40	141		267
	180	24	25	265	132	320	135	271	85	45	153	0.2Stroke	289
Lube	**200**	24	25	280	150	335	135	271	90	45	153		289
Non-Lube	**250**	29	30	355	180	420	160	331	105	55	176	0.17Stroke	347
	300	33	30	400	212	475	175	351	115	55	190		366

★ Rod Boot Material:neoprene cloth-80mm or more

※ Rod Boot material : neoprene cloth-80mm or more

Center Trunnion Type/(ALC)

Lube Type(ALC), Non-Lube Type(ALCN) Air-Hydro Type(ALCH)

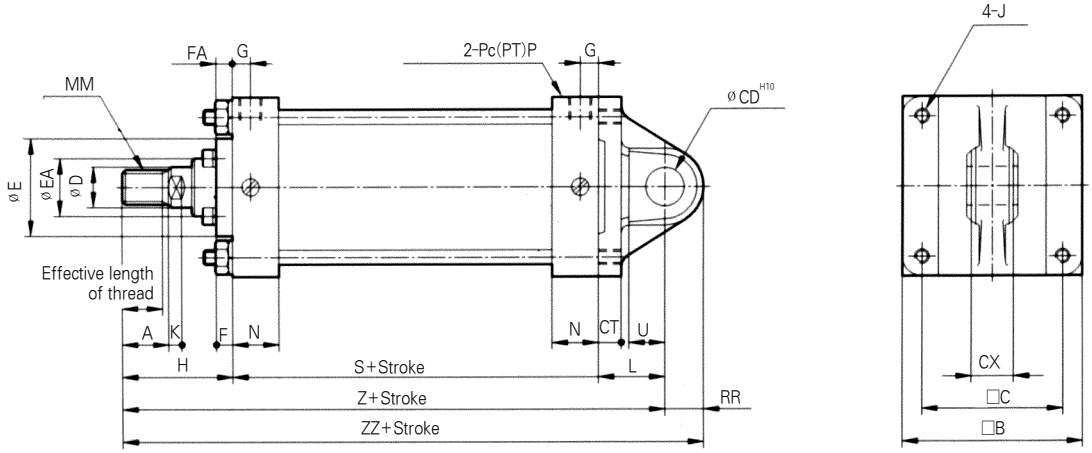

With Single Rod Boot

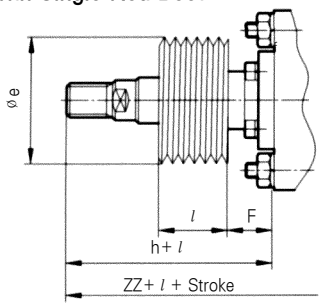

(mm)

Type	Bore size (mm)	※Stroke range (mm)	Effective length thread	A	□B	□C	ø D	ø E	ø EA	F	FA	G	J	K	L	MM	N	P	RR	S
Lube	**125**	~1,000	47	50	145	115	36	90	59	43	14	16	M14×1.5	15	65	M30×1.5	35	1/2	29	98
Non-Lube	**140**	~1,000	47	50	161	128	36	90	59	43	14	16	M14×1.5	15	75	M30×1.5	35	1/2	32	98
Air-Hydro	**160**	~1,200	53	56	182	144	40	90	59	43	14	18.5	M16×1.5	17	80	M36×1.5	39	3/4	36	106
	180	~1,200	60	63	204	162	45	115	70	48	17	18.5	M18×1.5	20	90	M40×1.5	39	3/4	44	111
Lube	**200**	~1,200	60	63	226	182	50	115	74	48	17	18.5	M20×1.5	20	90	M45×1.5	39	3/4	44	111
Non-Lube	**250**	~1,200	67	71	277	225	60	140	86	60	20	23	M24×1.5	25	110	M56×2	49	1	55	141
	300	~1,200	76	80	330	270	70	140	96	60	20	23	M30×1.5	30	130	M64×2	49	1	68	146

Type	Bore size (mm)	U	ø CD_{H10}	CT	CX	Without Rod Boot			With Rod Boot					
						H	Z	ZZ	ø e	f	h	l	Z_1	ZZ_1
Lube	**125**	35	$25^{+0.084}_{0}$	17	$32^{-0.1}_{-0.3}$	110	273	302	★75	40	133		296	325
Non-Lube	**140**	40	$28^{+0.084}_{0}$	17	$36^{-0.1}_{-0.3}$	110	283	315	★75	40	133	0.2Stroke	306	338
Air-Hydro	**160**	45	$32^{+0.100}_{0}$	20	$40^{-0.1}_{-0.3}$	120	306	342	★75	40	141		327	363
	180	50	$40^{+0.100}_{0}$	23	$50^{-0.1}_{-0.3}$	135	336	380	85	45	153	0.2Stroke	354	398
Lube	**200**	50	$40^{+0.100}_{0}$	25	$50^{-0.1}_{-0.3}$	135	336	380	90	45	153		354	398
Non-Lube	**250**	65	$50^{+0.100}_{0}$	30	$63^{-0.1}_{-0.3}$	160	411	466	105	55	176	0.17Stroke	427	482
	300	80	$63^{+0.120}_{0}$	37	$80^{-0.1}_{-0.3}$	175	451	519	115	55	190		466	534

※ Minimum stroke with Rod Boot:30mm

★ Rod Boot Material:neoprene cloth-80mm or more

Double Clevis Type/(ALD)

Lube Type(ALD), Non-Lube Type(ALDN), Air-Hydro Type(ALDH)

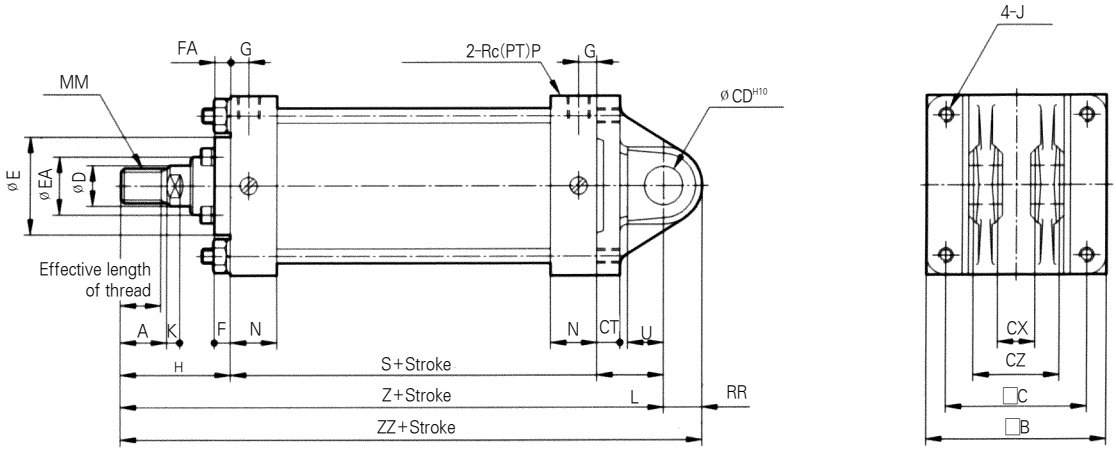

With Single Rod Boot

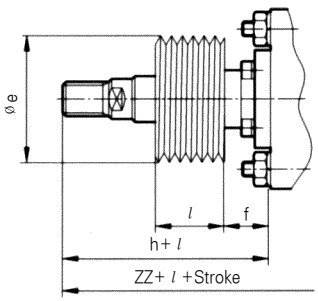

(mm)

Type	Bore size (mm)	※Stroke range (mm)	Effective length thread	A	□B	□C	ø D	ø E	ø EA	F	FA	G	J	K	L	MM	N	P	RR	S
Lube	**125**	~1,000	47	50	145	115	36	90	59	43	14	16	M14×1.5	15	65	M30×1.5	35	1/2	29	98
Non-lube	**140**	~1,000	47	50	161	128	36	90	59	43	14	16	M14×1.5	15	75	M30×1.5	35	1/2	32	98
Air-hydro	**160**	~1,200	53	56	182	144	40	90	59	43	14	18.5	M16×1.5	17	80	M36×1.5	39	3/4	36	106
	180	~1,200	60	63	204	162	45	115	70	48	17	18.5	M18×1.5	20	90	M40×1.5	39	3/4	44	111
Lube	**200**	~1,200	60	63	226	182	50	115	74	48	17	18.5	M20×1.5	20	90	M45×1.5	39	3/4	44	111
Non-lube	**250**	~1,200	67	71	277	225	60	140	86	60	20	23	M24×1.5	25	110	M56×2	49	1	55	141
	300	~1,200	76	80	330	270	70	140	96	60	20	23	M30×1.5	30	130	M64×2	49	1	68	

Type	Bore size (mm)	U	ø CD H10	CT	CX	CZ	Without Rod Boot			With Rod Boot					
							H	Z	ZZ	ø e	f	h	l	Z_1	ZZ_1
Lube	**125**	35	$25^{+0.084}_{0}$	17	$32^{+0.3}_{+0.1}$	$64^{0}_{-0.2}$	110	273	302	★75	40	133	0.2 Stroke	296	325
Non-lube	**140**	40	$28^{+0.084}_{0}$	17	$36^{+0.3}_{+0.1}$	$72^{0}_{-0.2}$	110	283	315	★75	40	133		306	338
Air-hydro	**160**	45	$32^{+0.100}_{0}$	20	$40^{+0.3}_{+0.1}$	$80^{0}_{-0.2}$	120	306	342	★75	40	141		327	363
	180	50	$40^{+0.100}_{0}$	23	$50^{+0.3}_{+0.1}$	$100^{-0.1}_{-0.3}$	135	336	380	85	45	153	0.2 Stroke	354	398
Lube	**200**	50	$40^{+0.100}_{0}$	25	$50^{+0.3}_{+0.1}$	$100^{-0.1}_{-0.3}$	135	336	380	90	45	153		354	398
Non-lube	**250**	65	$50^{+0.100}_{0}$	30	$63^{+0.3}_{+0.1}$	$126^{-0.1}_{-0.3}$	160	411	466	105	55	176	0.17Stroke	427	482
	300	80	$63^{+0.120}_{0}$	37	$80^{+0.3}_{+0.1}$	$160^{-0.1}_{-0.3}$	175	451	519	115	55	190		466	534

Center Trunnion Type/(ALT/ALXT)

Lube Type(ALT), Non-Lube Type(ALTN) Air-Hydro Type(ALTH)

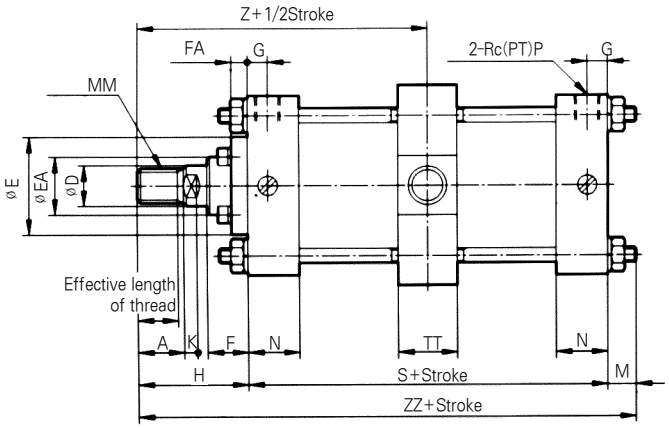

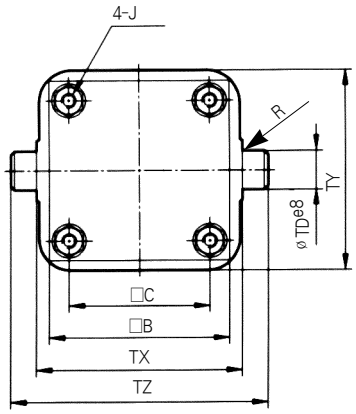

With Single Rod Boot

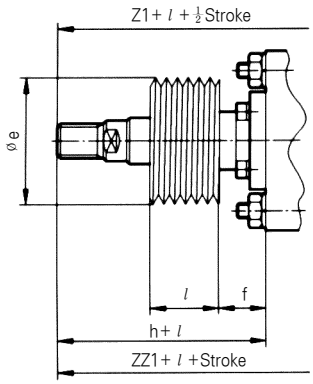

(mm)

Type	Bore size (mm)	※Stroke range (mm)	Effective length thread	A	□B	□C	ø D	ø E	ø EA	F	FA	G	J	K	M	MM	N	P	R	S
Lube Non-lube Air-hydro	**125**	25~1,000	47	50	145	115	36	90	59	43	14	16	M14×1.5	15	19	M30×1.5	35	1/2	1	98
	140	30~1,000	47	50	161	128	36	90	59	43	14	16	M14×1.5	15	19	M30×1.5	35	1/2	1.5	98
	160	35~1,200	53	56	182	144	40	90	59	43	14	18.5	M16×1.5	17	22	M36×1.5	39	3/4	1.5	106
Lube Non-lube	**180**	30~1,200	60	63	204	162	45	115	70	48	17	18.5	M18×1.5	20	26	M40×1.5	39	3/4	2	111
	200	30~1,200	60	63	226	182	50	115	74	48	17	18.5	M20×1.5	20	26	M45×1.5	39	3/4	2	111
	250	30~1,200	67	71	277	225	60	140	86	60	20	23	M24×1.5	25	30	M56×2	49	1	3	141
	300	35~1,200	76	80	330	270	70	140	96	60	20	23	M30×1.5	30	36	M64×2	49	1	4	146

Type	Bore size (mm)	ø TD_{e8}	TT	TX	TY	TZ	Without Rod Boot			With Rod Boot					
							H	Z	ZZ	ø e	f	h	l	Z_1	ZZ_1
Lube Non-lube Air-hydro	**125**	$32^{-0.050}_{-0.089}$	50	170	164	234	110	159	227	★75	40	133	0.2 Stroke	182	250
	140	$36^{-0.050}_{-0.089}$	55	190	184	262	110	159	227	★75	40	133		182	250
	160	$40^{-0.050}_{-0.089}$	60	212	204	292	120	173	248	★75	40	141		194	269
Lube Non-lube	**180**	$45^{-0.050}_{-0.089}$	59	236	228	326	135	190.5	272	85	45	153	0.2 Stroke	208.5	290
	200	$45^{-0.050}_{-0.089}$	59	265	257	355	135	190.5	272	90	45	153		208.5	290
	250	$56^{-0.060}_{-0.106}$	69	335	325	447	160	230.5	331	105	55	176	0.17 Stroke	246.5	347
	300	$67^{-0.060}_{-0.106}$	79	400	390	534	175	248	357	115	55	190		263	372

※ MInimum stroke with Rod Boot : 30mm
★ Rod Boot material : neoprene cloth-80mm or more

Basic Type/(ALXB)

Lube Type(ALXB), Non-Lube Type(ALXBN) Air-Hydro Type(ALXBH)

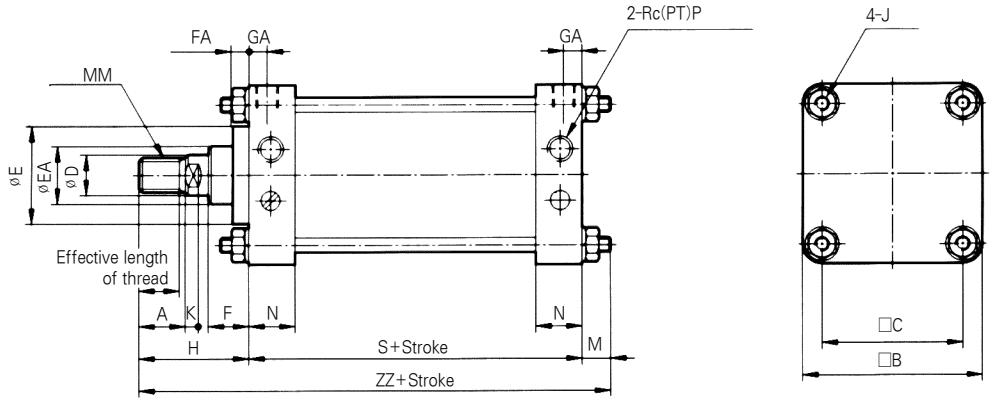

With Single Rod Boot

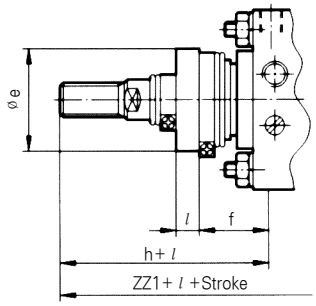

(mm)

Type	Bore-size	※Stroke range	Effective length thread	A	□B	□C	ø D	ø E	ø EA	F	FA	GA	GB	J	K	M	MM	N	P	S
Lube Non-lube	**125**	~1,000	47	50	145	115	36	90	59	43	14	16	40	M14×1.5	15	27	M30×1.5	35	1/2	98
	140	~1,000	47	50	161	128	36	90	59	43	14	16	40	M14×1.5	15	27	M30×1.5	35	1/2	98
	160	~1,200	53	56	182	144	40	90	59	43	14	18.5	40	M16×1.5	17	30.5	M36×1.5	39	3/4	106
	180	~1,200	60	63	204	162	45	115	70	48	17	18.5	-	M18×1.5	20	35	M40×1.5	39	3/4	111
	200	~1,200	60	63	226	182	50	115	74	48	17	18.5	-	M20×1.5	20	35	M45×1.5	39	3/4	111
	250	~1,200	67	71	277	225	60	140	86	60	20	23	-	M24×1.5	25	41.5	M56×2	49	1	141
	300	~1,200	76	80	330	270	70	140	96	60	20	23	-	M30×1.5	30	51.5	M64×2	49	1	146

Type	Bore size	Without Rod Boot		With Rod Boot					With
		H	ZZ	ø e	f	h	l	ZZ_1	
Lube Non-Lube	**125**	110	235	★75	40	133	0.2Stroke	258	31
	140	110	235	★75	40	133		258	31
	160	120	256.5	★75	40	141		277.5	36
	180	135	281	85	45	153	0.2Stroke	299	41
	200	135	281	90	45	153		299	46
	250	160	342.5	105	55	176	0.17Stroke	358.5	56
	300	175	372.5	115	55	190		387.5	65

※ Minmum stroke with Rod Boot:30mm

★ Rod Boot material:neoperne cloth-80mm

Series ALW/ALXW

Air Cylinder

Bore size / ø125, ø140, ø160, ø180, ø200, ø250, ø300

(ALXWB)

- DOUBLE ROD END CYLINDER
- AILUMINUM TUBE : ø125～ø160
- LRON TUBE: ø180～ø300

Symbol

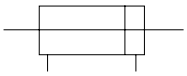

How to Order

ALW / ALXW (1) L (2) — N (3) 125 (4) — 100 (5) J (6) — W3□ (7) □ (8) ○ (9)

1 Double Rod End Cylinder

2 Mounting

3 Type

4 Bore Size

5 Stroke

6 Suffix Symbol for Cylinder

7 Applicable Auto Switch

8 Number of Switch

9 Series

※ For details, plese refer to page A-128

Specifications

Type	Lube, Non-lube	Air-hydro
Fluid	Air	L.P.Oil
Proof Pressure	16kgf/cm^2{1.6Mpa}	
Max. Operating Pressure	9.9kgf/cm^2{0.9Mpa}	
Min. Operating Pressure	0.5kgf/cm^2{50kPa}	0.6kgf/cm^2{60kPa}
Ambient and fluid temperature	5~60℃	
Piston speed	50~500mm/s	0.5~200mm/s
Cushion	With Air Cushion	Without Cushion
Mounting	Basic, Foot, Flange, Center trunnion	

Basic Type (ALWB/ALXWB)

Lube Type (ALWB),
Non-Lube Type (ALWBN)
Air-Hydro Type (ALWBH)

With Single Rod Boot

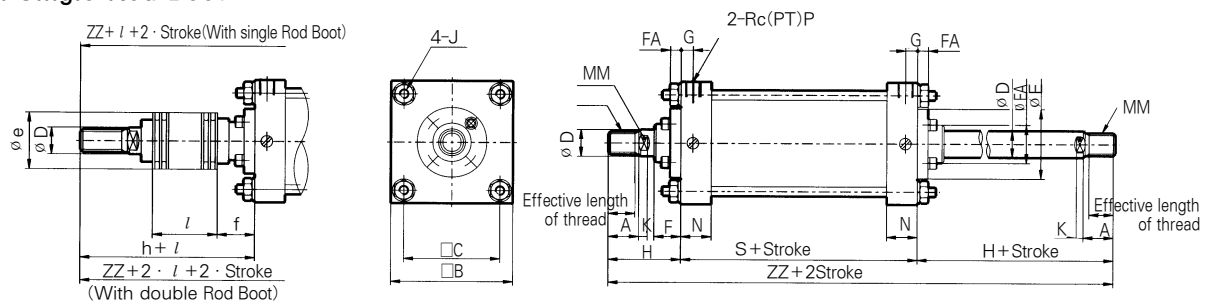

With Double Rod Boot

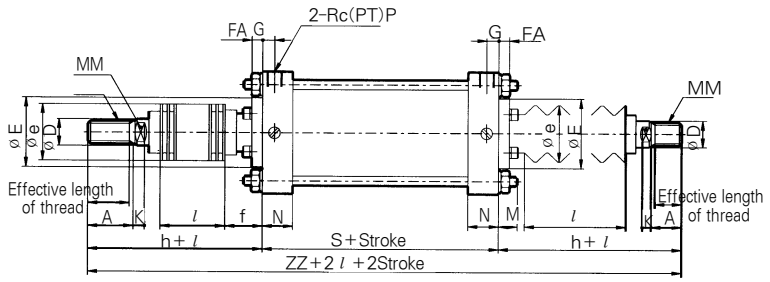

(mm)

Type	Bore size (mm)	Without Rod Boot		With Single Rod Boot					
		H	ZZ	ø e	f	h	l	ZZ	ZZ
Lube	125	110	318	★75	40	133	0.2Stroke	341	364
Non-Lube	140	110	318	★75	40	133		341	364
Air-Hydro	160	120	346	★75	40	141	0.2Stroke	367	388
Lub Non-Lube	180	135	381	85	45	153		399	417
	200	135	381	90	45	153		399	417
	250	160	461	105	55	176	0.17Stroke	477	493
	300	175	496	115	55	190		511	526

Type	Bore Size (mm)	Stroke range Without	Stroke range With Root Boot	Effective lenght of thread	A	□B	□C	øD	øE	øEA	F	FA	G	J	K	M	MM	N	P	S
Lube	125	~1,000	30~1,000	47	50	145	115	36	90	59	43	14	16	M14×1.5	15	27	M30×1.5	25	1/2	98
Non-Lube	140	~1,000	30~1,000	47	50	161	128	36	90	59	43	14	16	M14×1.5	15	27	M30×1.5	35	1/2	98
Air-Hydro	160	~1,200	30~1,200	53	56	182	144	40	90	59	43	14	18.5	M16×1.5	17	30.5	M36×1.5	39	3/4	106
Lub Non-Lube	180	~1,200	30~1,200	60	63	204	162	45	115	70	48	17	18.5	M18×1.5	20	35	M40×1.5	39	3/4	111
	200	~1,200	30~1,200	60	63	226	182	50	115	74	48	17	18.5	M20×1.5	20	35	M45×1.5	39	3/4	111
	250	~1,200	30~1,200	67	71	277	225	60	140	86	60	20	23	M24×1.5	25	41.5	M56×2	49	1	141
	300	~1,200	30~1,200	76	80	330	270	70	140	96	60	20	23	M30×1.5	30	51.5	M64×2	49	1	146

★ Rod Boot material : Neoprene cloth-80mm or more

Adjustable Stroke Cylinder/Extension Adjustable Type

AX / ALX — Mounting — Tube material — Type — Bore size — Stroke — Additional symbol — Stroke adjusting symbol — XC8

Additional symbol
Blake-With Rod
J-With Rod(Nylon tarpaulin)
K-With Rod(Neoprene cloth)

Stroke adjusting symbol
A-Stroke adjusting range 0~-25mm
B-Stroke adjusting range 0~-50mm

The stroke at extend of the cylinder can be adjusted by the stopper in the head side from full stroke 0~-25mm or 0~-50mm

Symbol

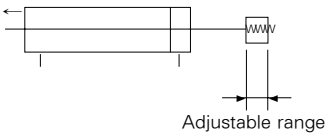

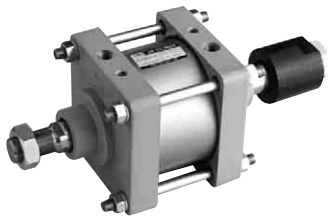

Construction, Dimensions/Basic Type

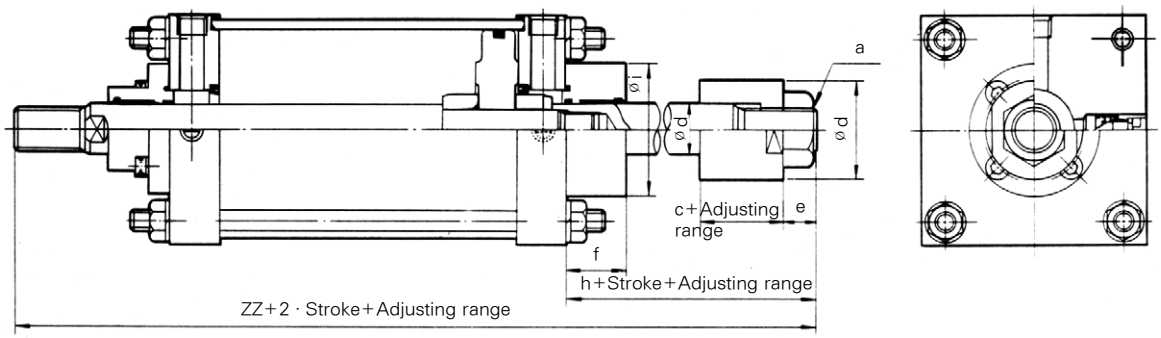

Tube Size(mm)	a	ø b	C	ø d	e	f	H	ø l	ZZ
125	M30×1.5	70	43	36	27	40	110	90	318
140	M30×1.5	70	43	36	27	40	110	90	318
160	M30×1.5	70	43	36	27	40	110	90	336
180	M42×1.5	80	50	45	37.5	45	132.5	115	378.5
200	M42×1.5	80	50	45	37.5	45	132.5	115	378.5
250	M56×2	110	70	60	50	55	175	140	476
300	M56×2	110	70	70	50	55	175	140	496

※ Other dimensions are the same as for standard type

Adjustable Stroke Cylinder/Retraction Adjustable Type

AL
ALX
Mounting — Tube material — Type — Bore size — Stroke — Additional symbol — Stroke adjusting symbol — XC9

Additional symbol
Blank-With gaiter
J-With gaiter(Nylon tarpaulin)
K-With gaiter(Neoprene cloth)

Stroke adjusting symbol
A-Stroke adjusting range 0~-25mm
B-Stroke adjusting range 0~-50mm

The stroke at retraction of the cylinder can be adjusted from 0~-25mm or 0~-50mm by the adjusting bolt.

Symbol

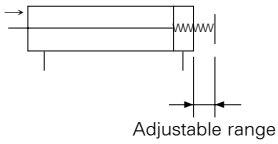

Construction, Dimensions/Basic Type

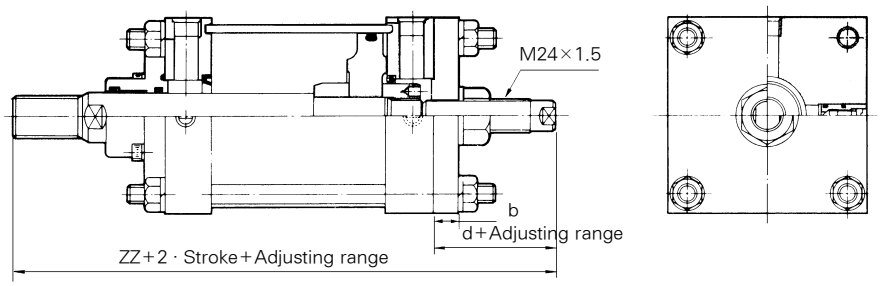

Bore size	b	d	ZZ
125	19	66	274
140	19	66	274
160	22	66	288

※ Other dimensions are the same as for standard type

Dual Stroke Cylinder/Double Rod Type

AL / ALX — Mounting — Tube material — Type — Bore size — Stroke A — Additional symbol + Stroke B — Additional symbol -XC10

Two cylinders are constructed as one cylinder in a back-to-back configuraton allowing the cylinder stroke to be controlled in three steps.

Construction, Dimensions/Basic Type

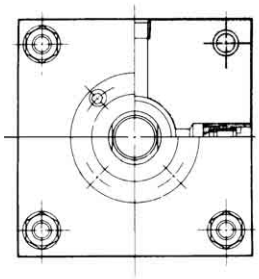

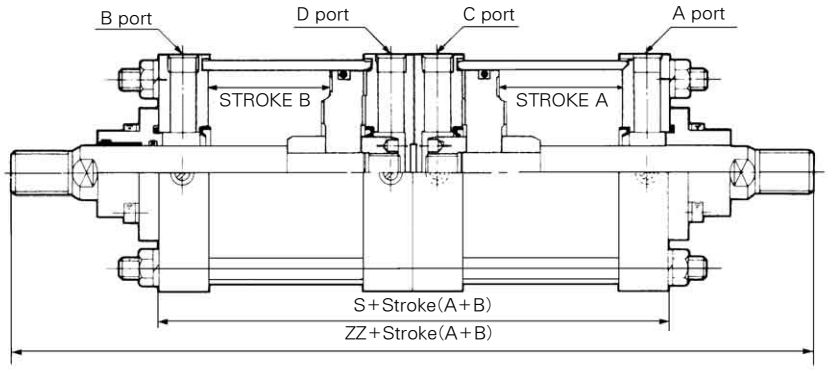

Bore size(mm)	S	ZZ
125	196	416
140	196	416
160	212	452
180	212	492
200	222	492
250	283	602
300	292	642

※ Other dimensions are the same as for standard type

Dual Stroke Cylinder/Single Rod Type

AL / ALX — Mounting — Tube material — Type — Bore size — Stroke A — Additional symbol + Stroke B-A — Additional symbol -XC11

Additional Rod Boot
Blank-Without Rod Boot
J-With Rod Boot(Nylon tarpaulin)
K-With Rod Boot(Neoprene cloth)

Construction, Dimensions/Basic Type

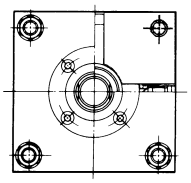

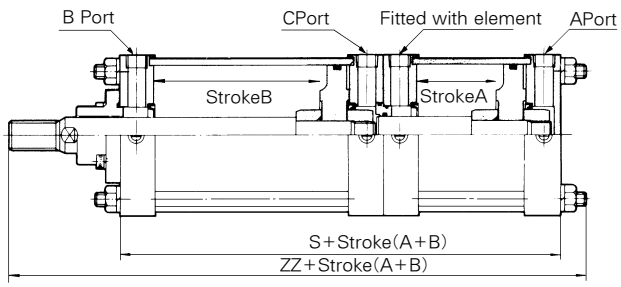

Bore size	S	ZZ
125	197	334
140	197	334
160	213	363.5
180	223	393
200	223	393
250	283	484.5
300	293	519.5

※ Other dimensions are the same as for standard type

With Coil Scraper

AL / ALX — Mounting — Tube material — Type — Bore size — Stroke — Suffix — X104

Suffix
Blank — Standard(Air Cashion)
R — Rod End Air Cashion
H — Head End Air Cashion
N — Non - Cashion

Bore Size	ø A	B
125	ø 50	0.8
140	ø 50	0.8
160	ø 50	2.8
180	ø 60	1.8

Bore Size	ø A	B
200	ø 64	1.8
250	ø 78	0.5
300	ø 88	5

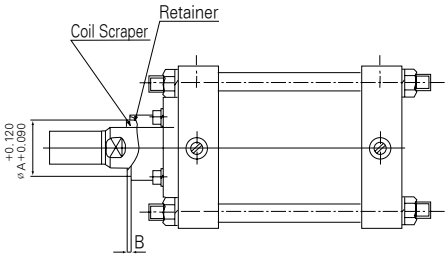

With Coil Scraper

AL / ALX — Mounting — Tube material — Type — Bore size — Stroke — Additional symbol — XC4

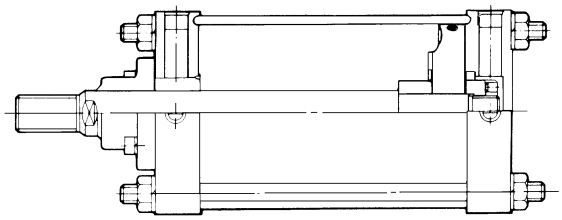

※ Dimensions are the same as for standard type.

Oversized Rod Cylinder

AL / ALX — Mounting — Type — Bore size — Stroke — Suffix — XB5

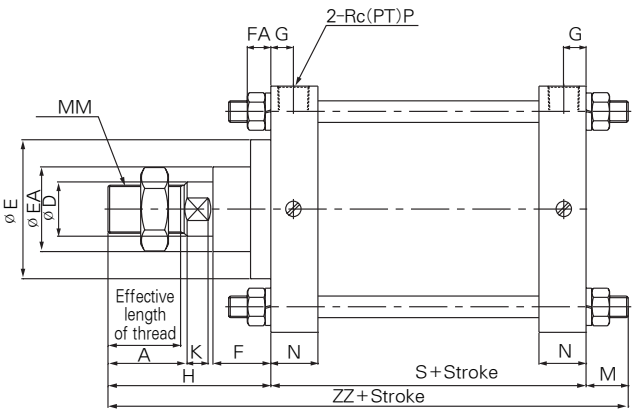

Type	Lube, Non-lube				
Bore size(mm)	125	140	160	180	200
Piston rod diameter(mm)	50	60	60	70	70

Bore Size	A	ø D	ø E	F	K	MM	H	ZZ
125	63	50	115	48	20	M45×1.5	135	260
140	71	60	140	60	25	M56×2	160	285
160	71	60	140	60	25	M56×2	160	296.5
180	80	70	140	60	30	M64×2	175	321
200	80	70	140	60	30	M64×2	175	321

※ Dimensions are the same as for Standard type

Series ARD

Round Cylinder/Double Acting

Bore size : ø32, ø40, ø50, ø63

- COMPACT LIGHT DESIGN
- HIGH SPEED ACTUATOR
- 2 TYPES OF AIR CUSHION (AIR/RUBBER)
- LIGHT WEIGHT

Symbol

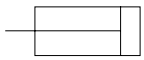

How To Order

ARD B A 40 — 150 — W4 □

1 2 3 4 5 6 7

1 Round Cylinder
* (Built-in Magnet, Bumper, Non-lube standard)

2 Mounting
B : Basic type

3 Cushion
Blank : Rubber Cushion
A : Air Cushion

4 Bore Size(mm)
32 : 32mm
40 : 40mm
50 : 50mm
63 : 63mm

5 Stroke(mm)

6 Applicable Reed Switch
Auto Switch
Blank : Without Auto Switch (Cylinder with built-in Magnet)
Reed Switch
W4(2wire DC24V, AC 100V)
Band mounted type(Grommate)
※ Standard Lead 1m (upto 3m optional)

7 Number of Switches
Blank : 2 pcs.
S : 1 pc.
n : n pcs.

Stroke

Rubber Cushion	Stroke	Air Cushion	Stroke
ø32	25~450mm	ø32	25~450mm
ø40	25~800mm	ø40	25~800mm
ø50	25~1200mm	ø50	25~1200mm
ø63	25~1200mm	ø63	25~1200mm

Specifications

Fluid	Air	
Proof Pressure	15 kgf/cm²	
Max. Operation Pressure	9.9 kgf/cm²	
Min. Operation Pressure	0.5 kgf/cm²	
Ambient and Fluid Temperature	5~ 60℃	
Lubrication	None(Non-Lube)	
Piston Speed	50~1000 mm/sec	
Stroke Tolerance	~1000ST: $^{+1.4}_{0}$ /~1200ST: $^{+1.8}_{0}$	
Thread Tolerance	KS 2 Class	
Cushion	Rubber Cushion	Air Cushion

Construction/Parts List

ARD ø32~ø63(Rubber Cushion Type)

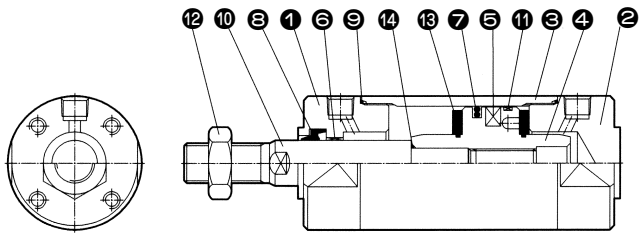

No.	Description	Material	Note
⓮	Piston Gacket	NBR	
⓭	Bumper	Urethane	
⓬	Rod End Nut	Rolled Steel	
⓫	Wear Ring	-	
❿	Piston Rod	Carbon Steel	
❾	Tube Gasket	NBR	
❽	Rod Packing	NBR	
❼	Piston Packing	NBR	
❻	Bush	Lead Bronze Casting	
❺	Magnet	Ba Ferrite+NBR	
❹	Piston	Al	
❸	Cylinder Tube	Al	
❷	Head Cover	Al	
❶	Rod Cover	Al	

ARDA ø32~ø63(Air Cushion Type)

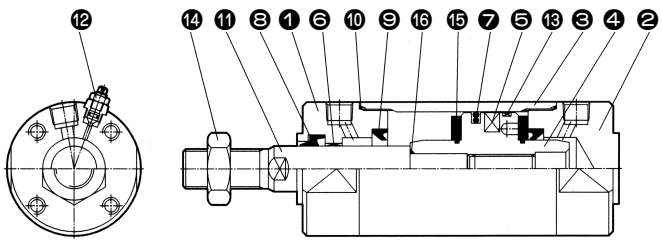

No.	Description	Material	Note
⓰	Piston Gacket	-	NBR
⓯	Bumper	Urethane	
⓮	Rod End Nut	Rolled Steel	
⓭	Wear Ring	-	
⓬	Cushion Valve Ass'y		
⓫	Piston Rod	Carbon Steel	
❿	Tube Gasket	NBR	
❾	Cushion Packing	NBR	
❽	Rod Packing	NBR	
❼	Piston Packing	NBR	
❻	Bush	Lead Bronze Casting	
❺	Magnet	Ba Ferrite+NBR	
❹	Piston	Al	
❸	Cylinder Tube	Al	
❷	Head Cover	Al	
❶	Rod Cover	Al	

Dimension

(mm)

Air Cushion Type

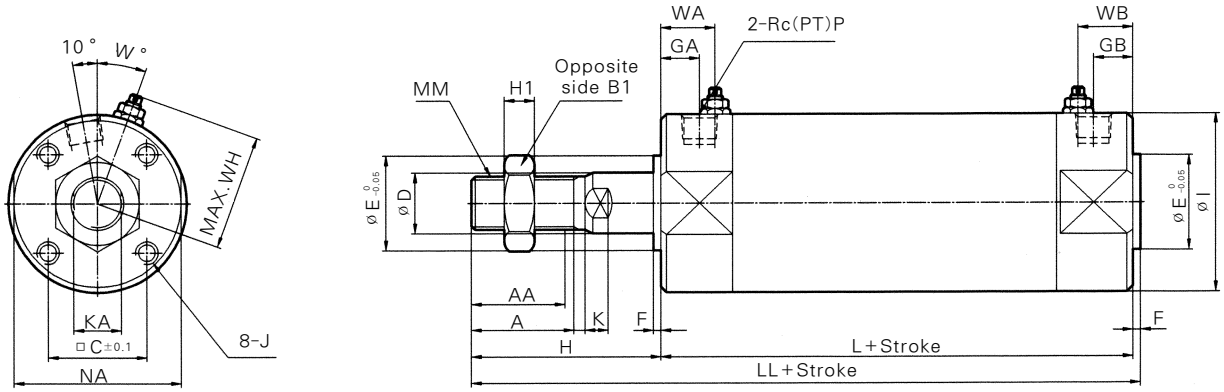

Rubber Cushion Type

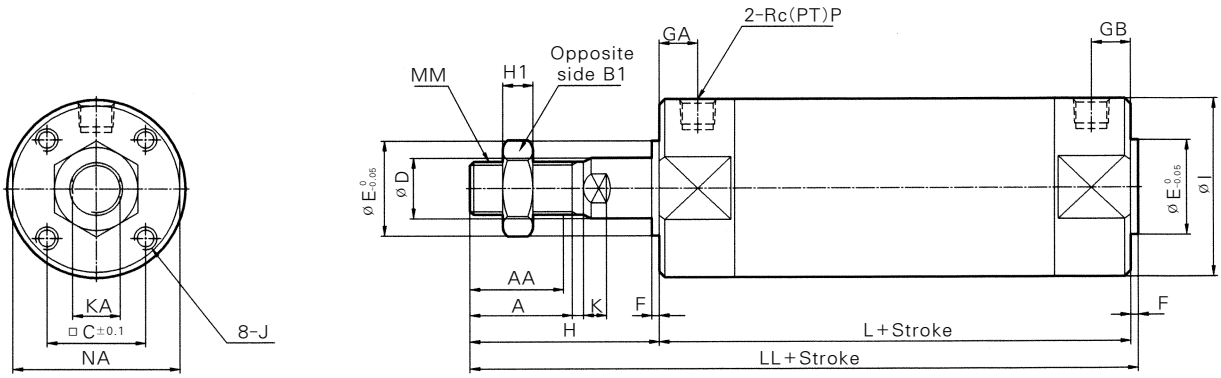

(mm)

Bore size (mm)	Standard stroke Range(mm) Extended stroke Range(mm)	AA	A	□C	øD	øE	F	GA	GB	øI	J	K	KA	MM	NA	P	L	H	LL	WA	WB	WH	W	H1	B1
ø32	~300 301~450	19.5	22	20	12	18	2	12	12	38	M5×0.8 DP:8	5.5	10	M10×1.25	36	1/8	82	40	124	14	14	28.5	25	6	17
ø40	~300 301~800	27	30	26	16	25	2	13	13	47	M6×1 DP:12	6	14	M14×1.5	44	1/8	87	50	139	15	15	33	20	8	22
ø50	~300 301~1200	32	35	32	20	30	2	14	14	58	M8×1.25 DP:16	7	18	M18×1.5	55	1/4	102	58	162	16	16	38.5	20	11	27
ø63	~300 301~1200	32	35	38	20	32	2	14	14	72	M10×1.5 DP:16	7	18	M18×1.5	69	1/4	105	58	165	16	16	45.5	20	11	27

Auto Switch Setting Position

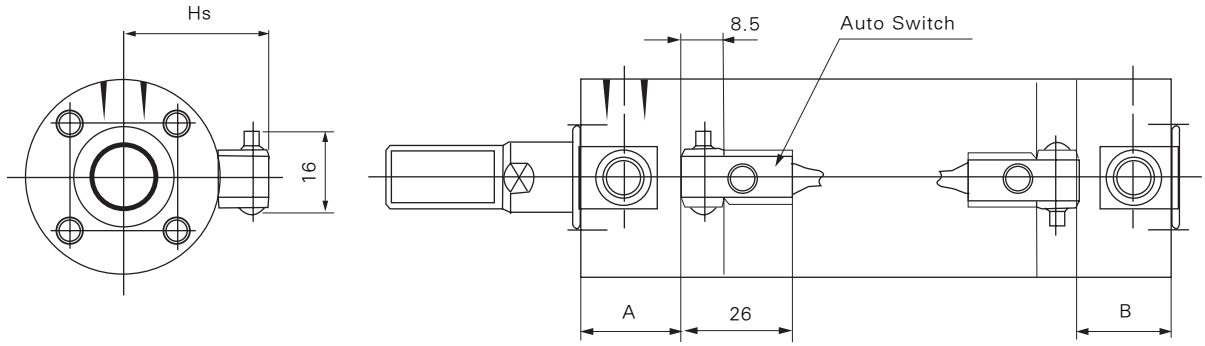

Auto Switch Mounting Position

(mm)

Bore size	W4		
	A	B	Hs
ø32	23	33	30.5
ø40	32	29	35
ø50	39.5	37.5	40.5
ø63	41	38	47.5

Minimum Auto Switch Mountable Stroke

(mm)

Type of Auto Switch	Number of Switch		
	With 2pcs.		With 1pc.
	Different Orientation	Same Orientation	
W4	15	50	10

Series AJ

Clamp Cylinder/Double Acting

Bore size : ø32, ø50, ø63

- TWO TYPES OF CLEVIS WIDTH ARE AVAILABLE(16.5mm, 19.5mm)
- THE PIPING ENTRY ORIENTATION CAN BE SELECTED
- EVEN MORE COMPACT AND LIGHT WEIGHT
- NON LUBE TYPE
- POSSIBLE TO DISASSEMBLE
- BUILT - IN SPEED CONTROLLER

Symbol

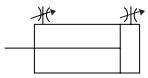

How to Order

AJ G A — 50 — 100 — Y ◯ — W□ ◯

1 2 3 4 5 6 7 8

1 Clamp Cylinder

2 Magnet
Blank : Without Magnet
G : Built-in Magnet

3 Clevis Width
A : 16.5mm(ø50, ø63)
$16^{+0.4}_{-0.2}$mm(ø32)
B : 19.5mm(ø50, ø63)

4 Bore Size(mm)-Stroke(mm)
32 : ø32 : 50, 75, 100, 125, 150, 200, 250, 300
50 : ø50 : 50, 75, 100, 125, 150
63 : ø63 : 50, 75, 100, 125, 150

5 Accessories
Blank : None
Y : Double Knuckle joint

6 Mount
B : Limit switch mount
D : Cam mount
19 : Foot mount

7 Applicable Auto Switch
Solid State Switch
W2 : 24VDC, For welding machine, intense magnetic fieled
Reed Switch
W3 : 24VDC, 100 · 200VAC
W6 : AC100V, OFF Lighting
W7 : DC24V, AC100V, ON Lighting

8 Number of Switch
Blank : 2 pcs.
S : 1 pc.
Y : n pcs.

Specifications

Clevis width	16.5mm	Series AJA
	19.5mm	Series AJB
Fluid		Air
Proof pressure		15 kgf/cm² (1.5MPa)
Max. operating pressure		9.9 kgf/cm² (0.99Mpa)
Min. operating pressure		0.5 kgf/cm² (0.05Mpa)
Ambient and fluid temperature		5~60℃
Piston velocity		50~500 mm/sec
Cushion		Air-cushion
Lubrication		Non-lube
Screw tolerance		KS 2 class
Stroke length tolerance		$^{+0.1}_{0}$
Speed controller		Built in (Standard)
Mounting style		Double clevis (Basic type only)

Accessories (Option)

Description	Series AJA	Series AJB
Single knuckle joint	TCKA40-17-101A	TCKB40-17-102A
Double knuckle joint (With pin and split pin)	TCKA40-18-206A	TCKB40-18-207A
Limit switch mount	TCKAM040-48-16070A	
Cam	TCKAM040-42-16070	

※ ø32: Double Knuckle Joint - AC1K032-18-1887
Clevis Pin - AC1K032-23-1887

Weight table(The basic weight is for 0 stroke.) (kgf)

Bore Size		ø32	ø50	ø63
Cylinder	Basic weight	0.42	0.96	1.23
	Additional weight per 50 stroke	0.06	0.11	0.13
Single knuckle joint		0.2		
Double knuckle joint (With pin)		0.28		
Limit switch mount		0.22		
Cam		0.12		
Special bracket		2.2		

Calculation Method

Example : AJ◯50-04Y
- Basic weight ··· 0.96(ø50)
- Additional weight ··· 0.01/25g stroke
- Cylinder stroke ··· 100mm stroke
- Double knuckle joint ··· 0.28(r)

0.96+0.10×100/250.28=1.64kgf

Dimensions/Series AJ

(Unit:mm)

AJ○32

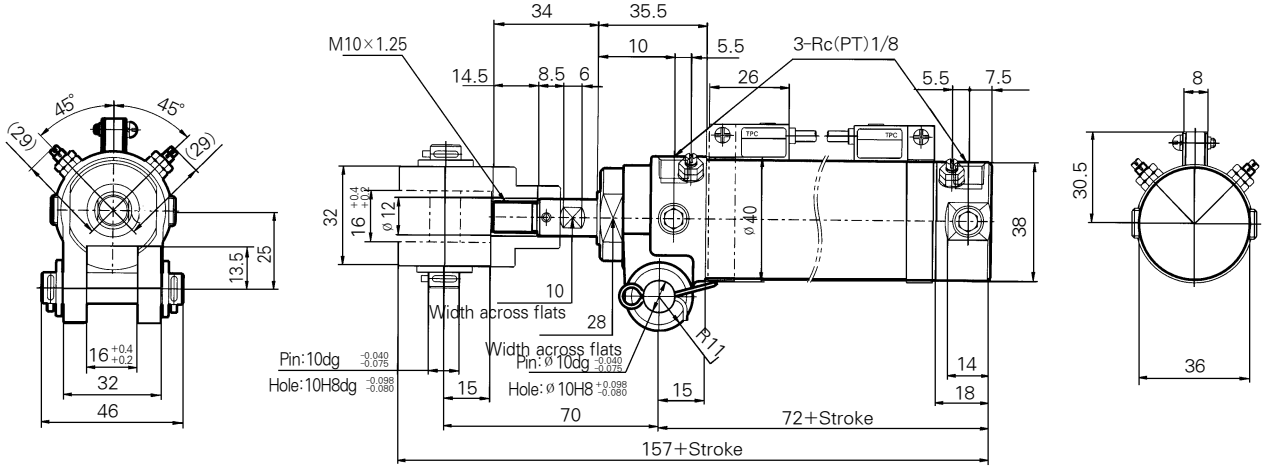

AJ○50, AJ○63

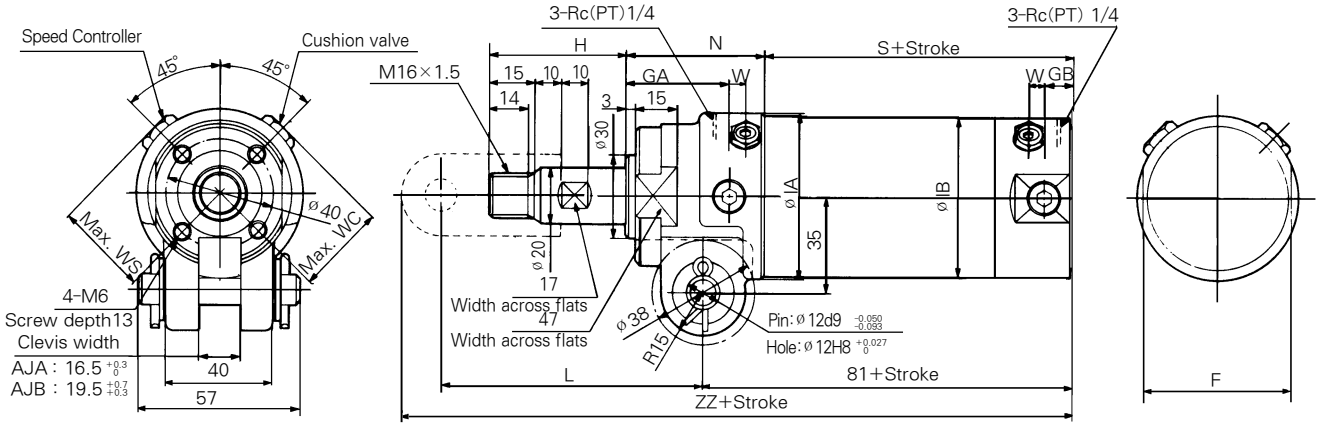

(Unit:mm)

Bore Size(mm)	F	GA	GB	H	ø IA	ø IB	L	N	S	W	WC	WS	ZZ
ø**50**	55	32	10	50	60	58	97	47	58	7	38	39	194
ø**63**	69	34	12	50	74	72	97	47	58	5.5	44	45	194

N

(Unit:mm)

Sign / Stroke / Bore Size(mm)	H					L					ZZ				
	50	75	100	125	150	50	75	100	125	150	50	75	100	125	150
ø**50**	52	62	70	83	83	98	107	115	128	128	194	204	212	225	225
ø**63**	52	62	70	83	83	98	107	115	128	128	194	204	212	225	225

Accessories

(Unit:mm)

Single knuckle joint

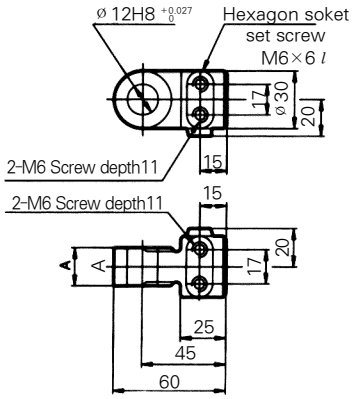

Material:Cast iron

Double knuckle joint

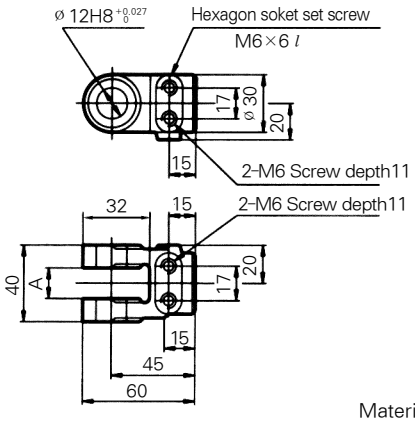

Material:Cast iron

Pin : TC1K040-23-54806

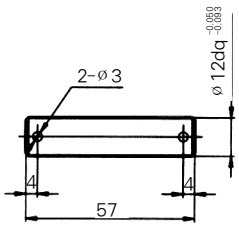

Material:Carbon steel

Part No.	A	Applicable clamp cylinder
TCKA40-17-101A	$20^{0}_{-0.1}$	AJA
TCKB40-17-102A	$19.5^{-0.2}_{-0.5}$	AJB

Part No.	A	Applicable clamp cylinder
TCKA40-18-206A	$16.5^{+0.2}_{0}$	Series AJA
TCKB40-18-207A	$19.5^{+0.7}_{+0.2}$	Series AJB

Foot Dimensions

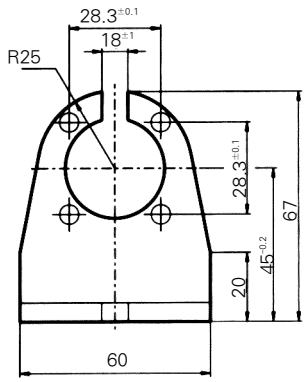

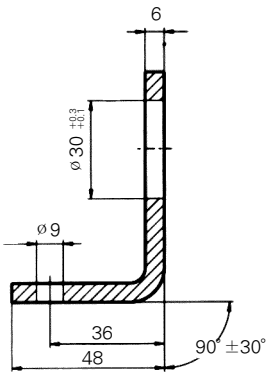

Limit switch mount : Cam mount

Material:Rolled steel

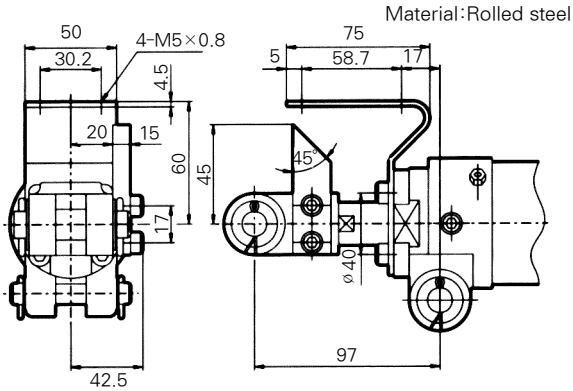

Note 1) The limit switch mount and the cam fitting are possible to change to optional positions by removing the hexagon socket head cap bolts.

Note 2) The cam fitting can be used when the mounting hole dimension is 97mm.

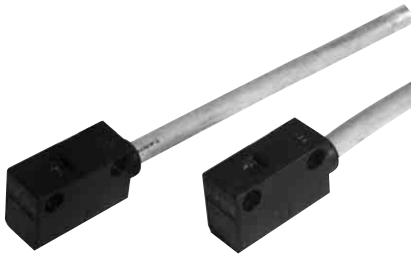

Auto Switch Specifications

Wiring Method	2 Wire
Applications	24V DC Relay, Sequence controller
Load Voltage	24V DC
Load Current	6~40mA
Internal Voltage Drop	7 V or Less
Leakage Current	1.6mA at 24V DC
Indicator Lamp	Appropriate operating range-Green lamp emitting diode
Acting Time	40ms or Less
Lead Wire	Oil proof vinyl cap tire cord ø6, 0.5mm^2 , 2cores(white, black)
Impact Resistance	1,000G
Insulation Resistance	50MΩ or more at 500DC
Ambient Temperature	-10℃~60℃
Protection Structure	EC Standard IP67(Watertight)

Auto Switch Internal Circuit

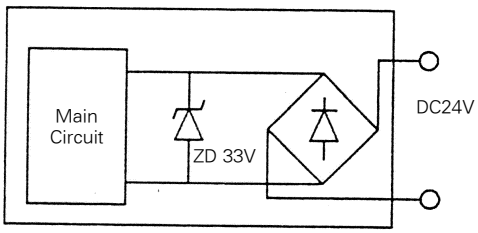

Auto Switch Dimensions

(Unit:mm)

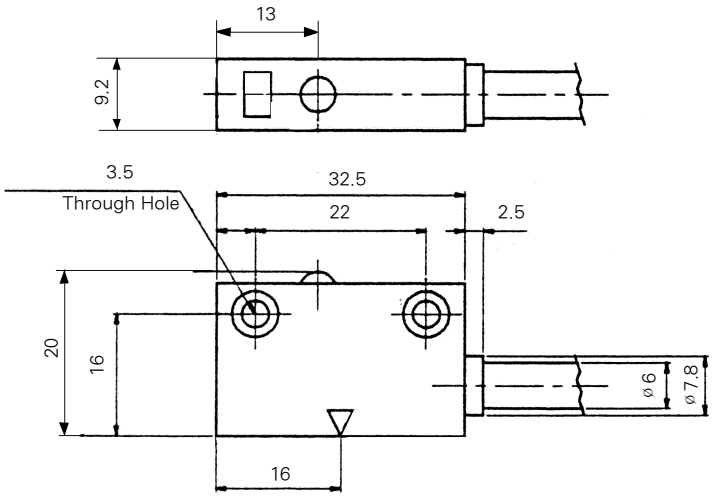

Series AJM

Clamp Cylinder / With Intense-Magnetism Resistant Auto Switch

Bore size : ø32, ø50, ø63

- TWO TYPES OF CLEVIS WIDTH ARE AVAILABLE(16.5mm, 19.5mm EXCEPT ø32)
- GAITHER IS UNNECESSARY
  BECAUSE A HEAVY DUTY COIL SCRAPER IS PROVIDED AS A COUNTER MEASURE AGAINST SPATTER, ROD BOOT IS UNNECESSARY
- BUILT - IN MAGNET

Symbol

How to Order

AJM (A) — 50 — 100 — (Y) ( ) — W□ ( )

1 2 3 4 5 6 7

1 Clamp Cylinder
With intense - magnetism resistant auto switch

2 Clevis Width
A : 16.5mm(ø50, ø63)
$16^{+0.4}_{-0.2}$mm(ø32)
B : 19.5mm(ø50, ø63)

3 Bore Size / Stroke(mm)
32 : ø32 - 50, 75, 100, 125, 150 200, 250, 300
50 : ø50 - 50, 75, 100, 125, 150
63 : ø63 - 50, 75, 100, 125, 150

4 Accessories
Blank : None
Y : Double Knuckle joint

5 Mount
B : Limit switch mount
D : Cam mount
19 : Foot mount

6 Applicable Auto Switch
W6 : 24VDC, OFF lighting
W7 : 24VDC, 100VAC, ON lighting
※ Refer to auto switch specification
W2 : 24VDC, For Welding Machine, Intense Magnetic Fieled
W3 : 24VDC, 100 · 200VAC

7 Number of Switch
Blank : 2 pcs
S : 1 pc
N : N pcs

Dimensions/Series AJM

(Unit:mm)

AJM○32

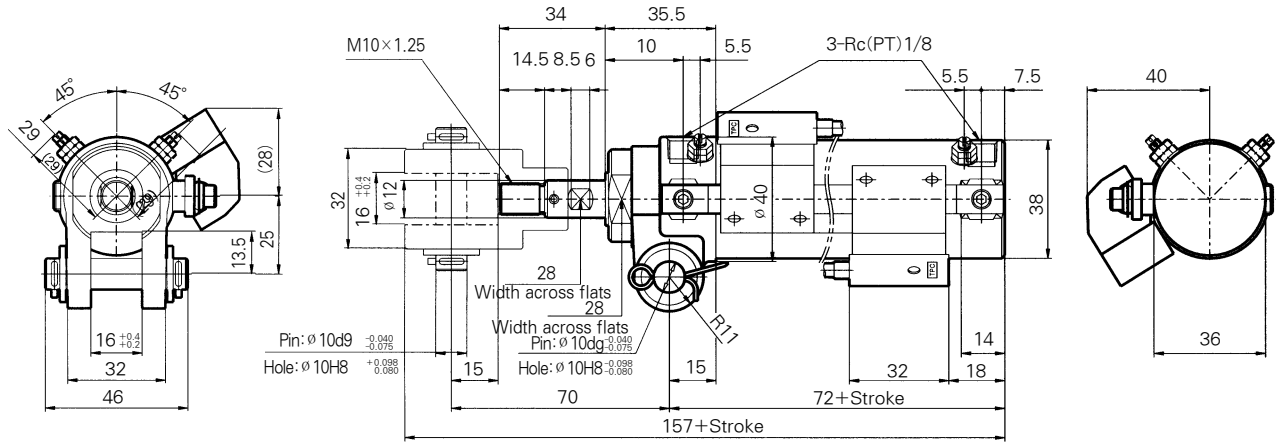

Dimensions/Series AJM

AJM○50, AJM○63

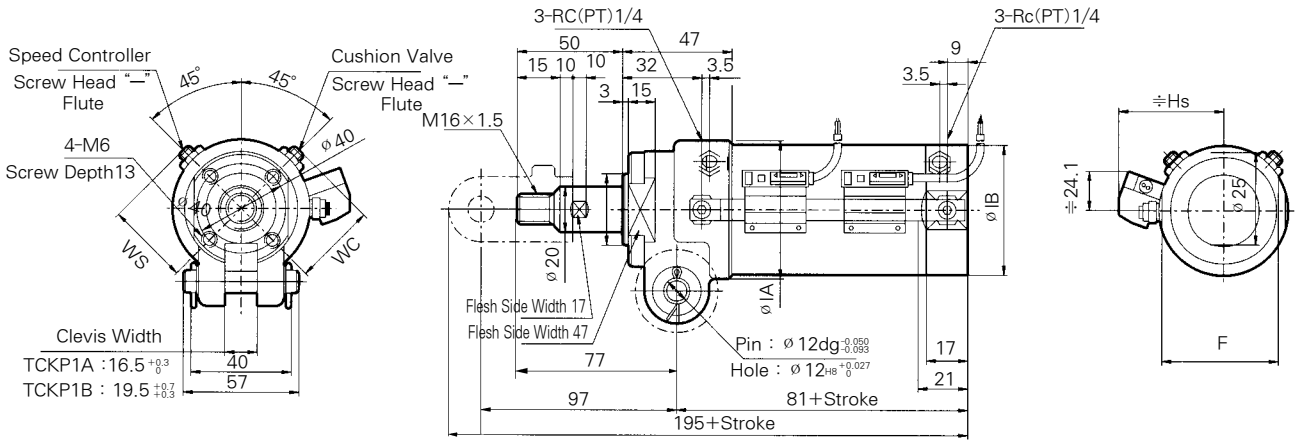

Bore	F	ø IA	ø IB	WC	WS	Hs
ø**50**	55	60	58	38	39	49
ø**63**	69	74	72	44	45	54.5

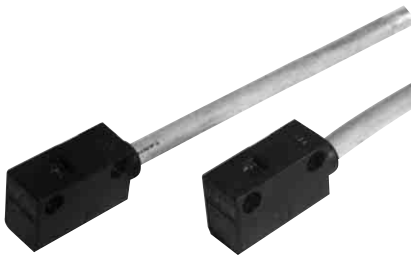

Auto Switch Specifications

Switch model NO.	W6(L), (Z)	W7(L), (Z)	
Switch type	Reed switch		
Operating voltage	AC100V	DC24V	AC100V
Operating Current circuit	20mA	5~40mA	5~20mA
Operating time	1.2mS		
Internal drop voltage	Nil	2.4V	
Leakge current Polarity	Max. 1.8mA	0	
Impact resistance	Operating	Present	
Pilot lamp	30G		
Type of lead wire	Oilproof, fire-resistant vinyl captype cord : 0.75㎡×2		
Lead wire length	0.5m, (3m), (5m)		
Ambient and fluid temperature	5~60℃		
Insulation resistance	50㏁ max. at DC 500V		
Protective construction	IEC : IP67 JIS CO920(Watertight)		
Application	Sequence controller relay		

Speed Controller Needle Revolutions And Corresponding Cylinder Speed

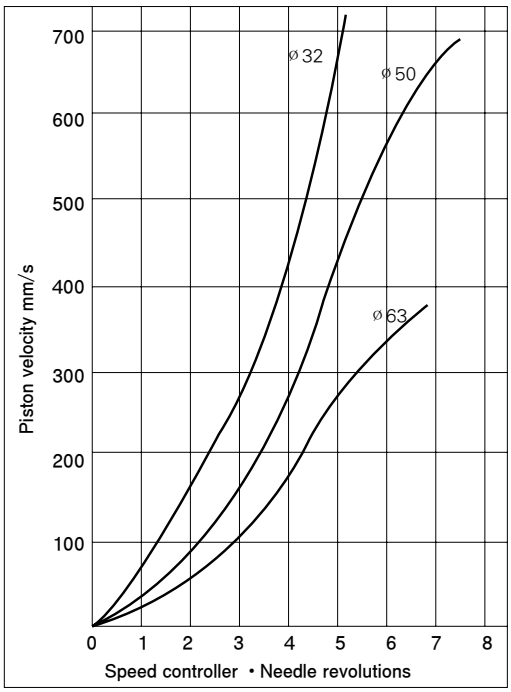

Conditions : OUT side supply pressure 5kgf/㎠,
No-load

Series AQ
Compact Cylinder

The cylinder is designed with ultra compact overall dimensions offering space saving features.
Ideal for use on applications requiring compact size fixtures and equipment.

Series Variation	Action	Style	Standard	Built-in magnet	Mounting thread(A) type	Rod end M thread	Rubber cushion	End boss	Copper free	Bore Size mm	Std Stroke (mm)
Standard 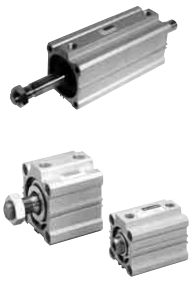	Double Acting	Single Rod AQ	●	●	●	●	●	●	●	12, 16, 20, 25, 32, 40, 50, 63, 80, 100	ø12, ø16/5~30 ø20, ø25/5~50 ø32, ~40/5~100 ø50~ø100/10~100
		Double Rod AQW	●	●	●	●	●			20, 32, 40, 50, 63, 80, 100	ø32, ~40/5~50 ø50~ø100/10~50
	Single Acting	Extend/ Retraction AQ	●	●	●	●		●	●	20, 32, 40, 50	ø20, ~40/5, 10 ø50/10, 20
Non-Rotating Type	Double Acting	Single Rod AQK	●	●	●	●				20, 32, 40, 50, 63	ø20/5~50 ø32, ø40/5~100 ø50~ø63/10~100
		Double Rod AQKW	●	●	●	●				20, 32, 40, 50, 63	ø20~ø40/5~50 ø50, ø63/10~50
Standard For Intense-Magnetism Resistant	Double Acting	Single Rod ADQCP								50, 63	ø50, ø63/25~100
Special Option											
Special Option											

Series AQ

Compact Cylinder/Double Acting, Single Acting Type

Bore Size (mm) : ø12, ø16, ø20, ø25, ø32, ø40, ø50, ø63, ø80, ø100

- SPACE SAVING DESIGN
- LIGHT WEIGHT
- 10 BORE SIZES
- AUTO SWITCH CAPABLE
- CYLINDERS FOR SPECIAL APPLICATIONS
- MANUFACTURING CERTIFIED TO ISO 9001&9002 STANDARDS

How to Order

Standard Type: AQ W B 20 — 30 D C —

With Auto Switch: ADQ W B 20 — 30 D C — W4 S

1 2 3 4 5 6 7 8 9 10

1 Built-in Magnet
For details, Please refer to Page A-179

2 Model
Blank : Single Rod
W : Double Rod
K : Non-Rotating

3 Type
B : Through Hole (Standard Type)
A : Both Ends Tapped
※ For the Dimensions of "A" type please refer to page A-196

4 Bore Size (mm)
12 : ø12
16 : ø16
20 : ø20
25 : ø25
32 : ø32
40 : ø40
50 : ø50
63 : ø63
80 : ø80
100 : ø100

5 Cylinder Stroke(mm)
※ For stroke refer to page A-162

6 Action
D : Double Acting
S : Single Acting/Spring Return
T : Single Acting/Spring Extended

7 Body Option(See list below)
Blank : Standard
C : Rubber cushion
M : Rod end male thread
F : Rear boss mount

8 Special Option
Blank : Standard type
XC16 : Copper-free

9 Applicable Auto Switch
Blank : Without Auto Switch
W4 : W4(Reed Switch)
※ Suffix L for lead wire exceeding 3m length.
Example) W4L

10 Number of Auto Switch
Blank : 2 pcs.
S : 1 pc.

Standard/Specifications

Fluid	Air
Max. Operating Pressure	1.5MPa (9.9kgf/㎠)
Ambient and Fluid Temperature	-10~70℃
Lubrication	Not Required
Cushion	None
Rod End Thread	Female (Standard Type)
Stroke Tolerance	$^{+1.0}_{0}$ mm
Mounting	Through Hole (Standard)
Piston Speed	50~500 mm/sec

Body Option/Available

● - Standard O - Optional

Type	Action	Code	Single Rod								Double Rod			
			Blank	M	C	CM	F	FM	FC	FCM	Blank	M	C	CM
Standard Type	Double Acting	ø12~ø20	●	●	●	○	●	●	●	○	●	●	●	●
		ø32~ø100	●	●	●	●	●	●	●	●	●	●	●	●
	Single Acting	Spring return Spring extended	●	●	—	—	●	●	—	—	—	—	—	—
With Auto Switch	Double Acting	ø12	—	●	—	—	●	●	—	—	—	—	—	—
		ø16~ø25	●	●	●	○	●	●	●	○	●	○	○	○
		ø32~ø100	●	●	●	●	●	●	●	●	●	●	●	●

Note) Single Acting(Spring return / Spring extended) is optional.

Model/Standard Stroke

Bore Size mm	Double Acting				Single Acting	
	Single Rod Type	Double Rod Type	Non-Rotating Rod Type	Rear Boss Mount Type	Spring Return Type	Spring Extended Type
	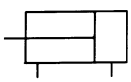	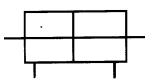	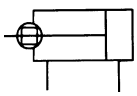	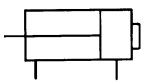	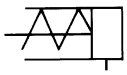	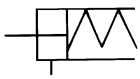
	Standard Stroke (mm)				Standard Stroke (mm)	
ø12	5, 10, 15 20, 25, 30	–	–	5, 10, 15 20, 25, 30	–	–
ø16						
ø20	5, 10, 15, 20, 25, 30, 35, 40, 45, 50, 75	5, 10, 15, 20, 25, 30, 35, 40, 45, 50	5, 10, 15, 20, 25, 30, 35, 40, 45, 50	5, 10, 15, 20, 25, 30, 35, 40, 45, 50, 75	5, 10	5, 10
ø25					–	–
ø32	5, 10, 15, 20, 25, 30, 35, 40, 45, 50, 75, 100, 125, 150	5, 10, 15, 20, 25, 30, 35, 40, 45, 50, 75, 100	5, 10, 15, 20, 25, 30, 35, 40, 45, 50, 75	5, 10, 15, 20, 25, 30, 35, 40, 45, 50, 75, 100, 125, 150	5, 10	5, 10
ø40						
ø50	10, 15, 20, 25, 30, 35, 40, 45, 50, 75, 100, 125, 150	10, 15, 20, 25, 25, 30, 35, 40, 45, 50, 75, 100	10, 15, 20, 25, 25, 30, 35, 40, 45, 50, 75, 100	10, 15, 20, 25, 25, 30, 35, 40, 45, 50, 75, 100, 125, 150	10	10
ø63					–	–
ø80			–			
ø100						

• **Intermediate Stroke**

A spacer of 5, 10, 15 and 20mm is used for intermediate strokes between 55 and 100mm stroke(55, 60, 65...).
(Example) AQB50-55D is produced by installing 20mm spacer in AQB50-75.

Options

Name	Applicable Type
Cushion	Rubber Cushion/Double Acting Only
Rod End MaleThread	Optional
Boss Mount	Optional
Non-Rotating Piston Rod Type	Double Acting/Single Rod Type Only

Minimum Operating Pressure (kgf/cm²)

Type \ Bore Size (mm)	12	16	20	25	32	40	50	63	80	100
Double Acting (Single Rod)	0.7	0.7	0.5	0.5	0.5	0.5	0.5	0.5	0.5	0.5
Single Acting (Spring Return, Spring Extended)	–	–	1.8	–	1.7	1.5	1.3	–	–	–

Non-Rotating Rod Accuracy

Bore Size (mm)	ø20 • ø25	ø32	ø40	ø50	ø63
Non-Rotating Rod Accuracy	±1°	±0.8°			

Cautions

① When mounting, completely flush piping, be careful that dust and chips do not enter the cylinder.
② The piston rod load should always be aligned with the cylinder axis.
- Cylinder installation requires accurate alignment.
- When used as a stopper, avoid side loading of the piston rod.

③ Prevent damage to the piston rod. A damaged piston rod can lead to failure of the rod packing and result in cylinder failure.
④ When disassembling, remove the retaining ring (C-type) with special tool. (Assembling tool for C-type retaining ring)

Theoretical Force

Single Acting (kgf)

Action	Bore Size mm	Operating pressure (kgf/cm) 3	5	7	Spring Force: Spring Extended Position	Spring Return Position	Rod and Max. Axial Load
Spring Return	20	7.8	14.1	20.3	1.6	0.6	0.67
	25	12.6	22.4	32.2	2.1	1.1	1.63
	32	21.7	37.8	53.8	2.4	1.5	1.77
	40	34.5	59.7	84.8	3.1	1.3	1.77
	50	52.9	92.1	131.4	5.5	2.5	3.1
Spring Extended	20	4.2	8.9	13.6	2.8	0.5	0.67
	25	8.3	15.8	23.4	3.0	1.0	1.63
	32	15.0	27.1	39.2	3.0	2.0	1.77
	40	28.6	49.7	70.8	3.0	2.0	1.77
	50	40.9	73.9	106.9	8.5	2.5	3.1

Double Acting Single Rod (kgf)

Bore size	Rod direction	Operating pressure kgf/cm 3	5	7
12	IN	2.5	4.2	5.9
	OUT	3.3	5.6	7.9
16	IN	4.5	7.5	10.5
	OUT	6	10	14
20	IN	7	11.7	16.4
	OUT	9.4	15.7	21.9
25	IN	11.3	18.8	26.4
	OUT	14.7	24.5	34.3
32	IN	18	30	42
	OUT	24	40	56
40	IN	31	52	73
	OUT	37	62	87
50	IN	49	82	115
	OUT	58	98	137
63	IN	84	140	196
	OUT	93	155	218
80	IN	136	227	317
	OUT	150	251	352
100	IN	214	357	500
	OUT	236	393	550

Auto Switch Mounting Bracket/PART No.

Bore Size (mm)	Mounting Band	Note	Applicable Auto Switch
12 • 16 • 20 • 25	BQ-1	• Auto Switch Mounting Screw (M3×0.5×8 l) • Square Nut	W4
32 • 40 • 50 • 63 • 80 • 100	BQ-2	• Auto Switch Mounting Screw (M3×0.5×10 l) • Auto Switch Spacer • Auto Switch Mounting Nut	

Construction/Parts List

Double Acting/Single Rod Type

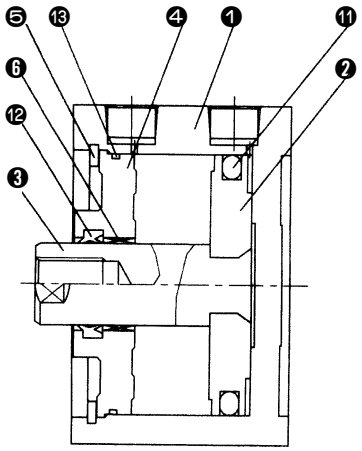

Standard Type

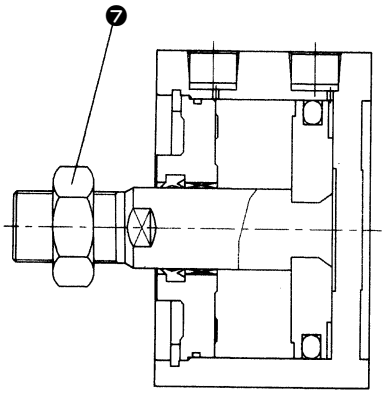

Rod End Male Thread Type

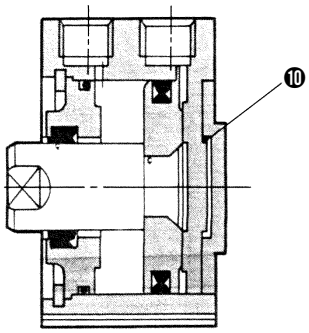

Rear boss mount type

Parts List

No.	Description	Material	Note
❶	Cylinder Tube	Aluminum Alloy	
❷	Piston	Aluminum Alloy	Chromate
❸	Piston Rod	Carbon Steel	ø32~ø100, Hard chrome
❹	Collar	Aluminum Bearing Alloy	ø12~ø40
		Aluminum Alloy Casting	ø50~ø100
❺	Retaining Ring	Carbon Tool Steel	Phosphate Casting

No	Description	Material	Note
❻	Bushing	Lead Bronze Casting	Only above ø50
❼	Rod end nut	Carbon steel	Nickel Plated
❽	A Bumper	Polyurethane rubber	
❾	B Bumper	Polyurethane rubber	
❿	Boss mount adapter	Aluminum alloy	ø20~ø100

Seals List

No	Description	Material	Parts No.									
			ø12	ø16	ø20	ø25	ø32	ø40	ø50	ø63	ø80	ø100
⓫	Piston packing	NBR	NLP-12	NLP-16A	NLP-20A	NLP-25A	NLP-32A	NLP-40A	NLP-50A	NLP-63A	NLP-80A	NLP-100A
⓬	Rod packing	NBR	DYR-6K	DYR-8K	DYR-10SK	DYR-12	DYR-16	PDU-16Z	PDU-20Z	PDU-20Z	PDU-25Z	PDU-30Z
⓭	Gasket	NBR	SO-013-6	C14	C18	C22	C29	C36	C46	C60	C75	C95

Construction/Parts List

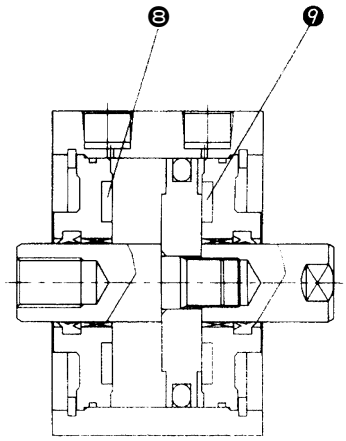

Double Rod Type

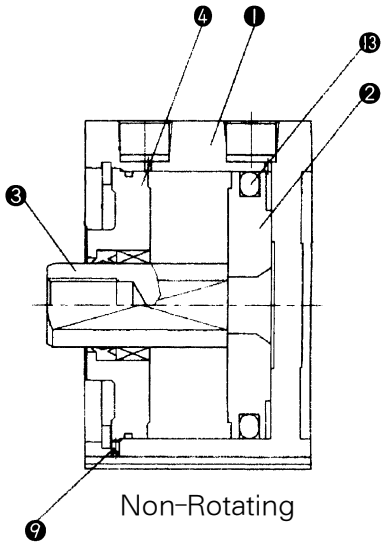

Non-Rotating

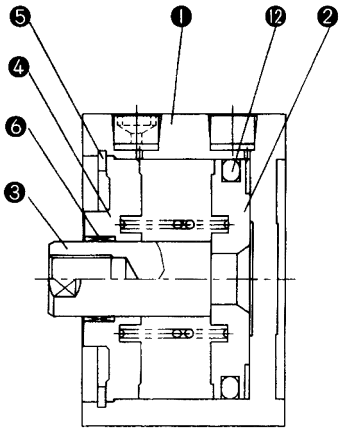

Spring Return Type

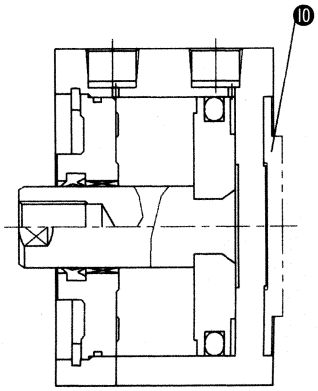

Spring Extended Type

Parts List

No.	Description	Material	Note
❶	Cylinder Tube	Aluminum Alloy	
❷	※ Piston	Aluminum Alloy	Chromate
❸	※ Piston Rod	Carbon Steel	
❹	Collar	Aluminum Bearing Alloy	
		Aluminum Alloy Casting	
❺	Retaining Ring	Carbon Tool Steel	Phosphate Coating

※ ø 12～ø 25 Piston rod…One piece construction(Stainless steel)

No	Description	Material	Note
❻	Bushing	Lead Bronze Casting	Only above ø 50
❼	Rod End Nut	Carbon Steel	Nickel Plating
❽	A Bumper	Polyurethane Rubber	
❾	B Bumper	Polyurethane Rubber	
❿	Boss Mount Adapter	Aluminum Alloy	

Seals List

No	Description	Material	Parts No.									
			12	16	20	25	32	40	50	63	80	100
⓫	Piston Packing	NBR	NLP-12	NLP-16A	NLP-20A	NLP-25A	NLP-32A	NLP-40A	NLP-50A	NLP-63A	NLP-80A	NLP-100A
⓬	Rod Packing	NBR	DYR-6K	DYR-8K	DYR-10SK	DYR-12	DYR-16	PDU-16Z	PDU-20Z	PDU-20Z	PDU-25Z	PDU-30Z
⓭	Gasket	NBR	SO-013-6	C14	C18	C22	C29	C36	C46	C60	C75	C95

Double Acting/Single Rod Type : Dimensions

Bore Size : ø 12～ø 25

For the Dimension of
"A" type (Both End Tapped)
Please refer to Page A-196

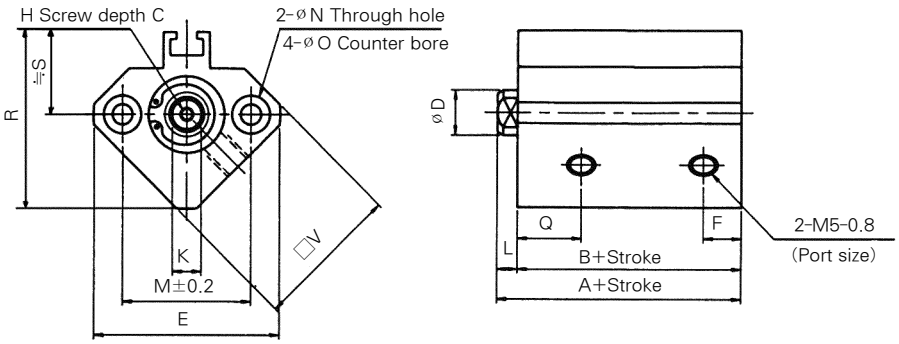

Rear Both Mount

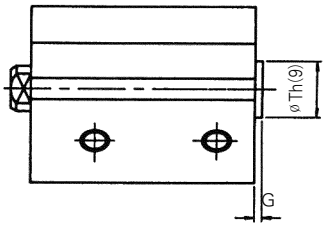

Rear Boss Mount (mm)

Bore size (mm)	G	Th(9)
ø12	1.5	$15^{0}_{-0.043}$
ø16	1.5	$20^{0}_{-0.052}$
ø20	2	$13^{0}_{-0.043}$
ø25	2	$15^{0}_{-0.043}$

Rod End Male Thread

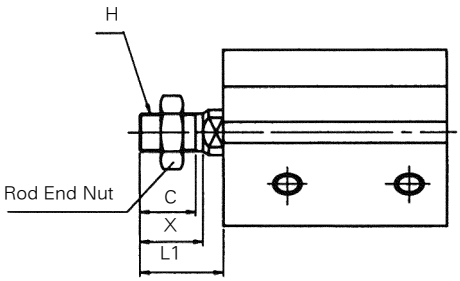

Rod End Male Thread (mm)

Bore size (mm)	C	X	H	L1
ø12	9	10.5	M5×0.8	14.0
ø16	10	12	M6×1.0	15.5
ø20	12	14	M8×1.25	18.5
ø25	15	17.5	M10×1.25	22.5

Standard Type (Unit : mm)

Bore size (mm)	Stroke Range (mm)	A	B	C	D	E	F	H	K	L	M	N	øO	Q	R	S	□V
ø12	5~30	20.5	17	6	6	32	5	M3×0.5	5	3.5	22	3.5	6.5 Depth3.5	11	35.5	19.5	25
ø16	5~30	22	18.5	8	8	38	5.5	M4×0.7	6	3.5	28	3.5	6.5 Depth3.5	10	41.5	22.5	29
ø20	5~50	24	19.5	7	10	47	5.5	M5×0.8	8	4.5	36	5.5	9 Depth 7	10.5	48	24.5	36
ø25	5~50	27.5	22.5	12	12	52	5.5	M6×1.0	10	5	40	5.5	9 Depth 7	11	53.5	27.5	40

Double Acting/Single Rod Type : Dimensions

Bore Size : ø32～ø100

For the Dimension of "A" type (Both End Tapped) Please refer to Page A-196

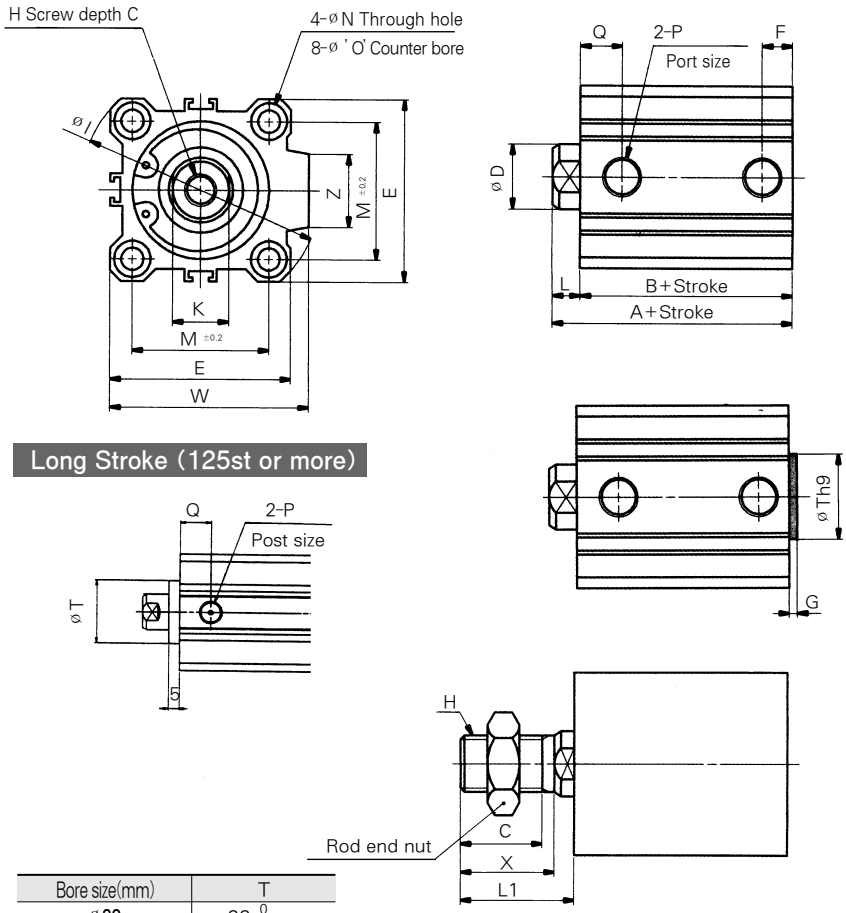

Long Stroke (125st or more)

Bore size(mm)	T
ø32	22 $^{0}_{-0.052}$
ø40	28 $^{0}_{-0.052}$
ø50, ø63	35 $^{0}_{-0.062}$
ø80	43 $^{0}_{-0.062}$
ø100	59 $^{0}_{-0.074}$

Rear Boss Mount (mm)

Bore size (mm)	G	Th9
ø32	2	21 $^{0}_{-0.052}$
ø40	2	28 $^{0}_{-0.052}$
ø50	2	35 $^{0}_{-0.062}$
ø63	2	35 $^{0}_{-0.062}$
ø80	2	43 $^{0}_{-0.062}$
ø100	2	59 $^{0}_{-0.074}$

Rod End Male Thread (mm)

Bore size(mm)	C	X	H	L1※
ø32	20.5	23.5	M14×1.5	28.5(38.5)
ø40	20.5	23.5	M14×1.5	28.5(38.5)
ø50	26	28.5	M18×1.5	33.5(43.5)
ø63	26	28.5	M18×1.5	33.5(43.5)
ø80	32.5	35.5	M22×1.5	43.5(53.5)
ø100	32.5	35.5	M26×1.5	43.5(53.5)

※( ) : 125st or more

Standard Type (Unit : mm)

Bore size (mm)	Stroke range (mm)	A	B	C	D	E	F	H	I	J	K	L	M	N	øO	P	Q	W	Z
ø32	5	30	23	13	16	45	5.5	M8×1.25	60	4.5	14	7	34	5.5	9Depth7	M×0.8 1/8 Rc(PT)	11.5	49.5	18
	10~50						7.5										10.5		
	75,100	40	33																
	125, 150	62.5	45.5				12.5					17					12.5	58.5	
ø40	5~50	36.5	29.5	13	16	52	8	M8×1.25	69	5	14	7	40	5.5	9Depth7	M×0.8 1/8 Rc(PT)	11	57	18
	75,100	46.5	39.5																
	125, 150	72	55				14					17					14	66	
ø50	10~50	38.5	30.5	15	20	64	10.5	M10×1.5	86	7	17	8	50	6.6	11Depth8	M×0.8 1/4 Rc(PT)	10.5	71	22
	75,100	48.5	40.5																
	125, 150	73.5	55.5				14					18					14	80	
ø63	10~50	44	36	15	20	77	10.5	M10×1.5	103	7	17	8	60	9	14Depth10.5	M×0.8 1/4 Rc(PT)	15	84	22
	75,100	54	46																
	125, 150	75	57				16.5					18					16.5	93	
ø80	10~50	53.5	43.5	21	25	98	12.5	M16×2.0	132	6	22	10	77	11	17.5Depth13.5	M×0.8 3/8 Rc(PT)	16	104	26
	75,100	63.5	53.5																
	125, 150	86	66				19					20					19	112.5	
ø100	10~50	65	53	27	30	117	13	M20×2.5	156	6.5	27	12	94	11	17.5Depth13.5	M×0.8 3/8 Rc(PT)	23	123.5	26
	75,100	75	63																
	125, 150	97.5	75.5				23					22						132.5	

Double Acting/Non-Rotating Piston Rod/Single Rod Type : Dimensions

Bore Size : ø20～ø25

For the Dimension of "A" type (Both End Tapped) Please refer to Page A-196

Through Hole

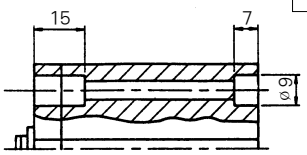

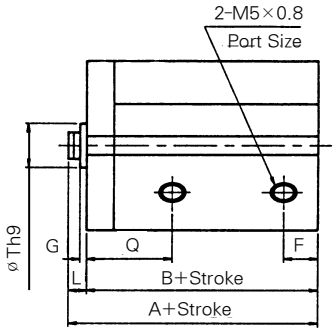

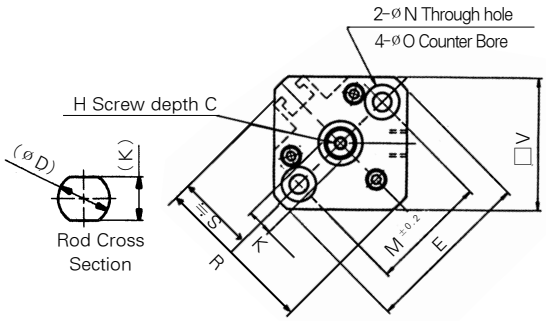

Rear Boss Mount

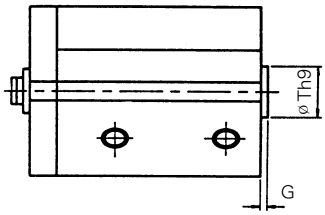

Rear Boss Mount (mm)

Bore Size (mm)	G	Th9
ø20	2	$13^{0}_{-0.043}$
ø25	2	$15^{0}_{-0.043}$

Rod End Male Thread

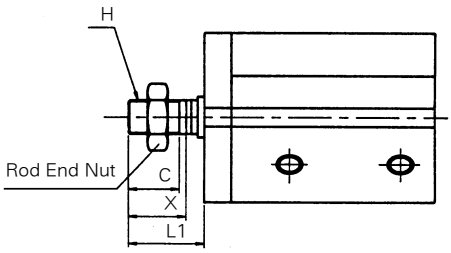

Rod End Male Thread (mm)

Bore Size (mm)	C	H	L1	X
ø20	12	M8×1.25	18.5	14
ø25	15	M10×1.25	22.5	17.5

Standard Type

Bore size (mm)	Stroke range (mm)	A	B	C	D	E	F	G	H	K	L	M	N	O	Q	R	S	V
ø20	5～50	32	27.5	7	10	47	5.5	2	M5×0.8	8	4.5	36	5.5	M6×1.0	17	48	24.5	36
ø25	5～50	35.5	30.5	12	12	52	5.5	2	M6×1.0	10	5	40	5.5	M6×1.0	19	53.5	27.5	40

Double Acting/Non-Rotating Rod/Single Rod Type : Dimensions

Bore Size : ø 32

For the Dimension of
"A" type (Both End Tapped)
Please refer to Page A-196

Through Hole

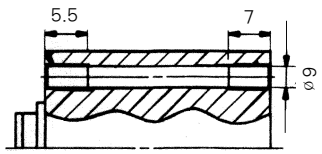

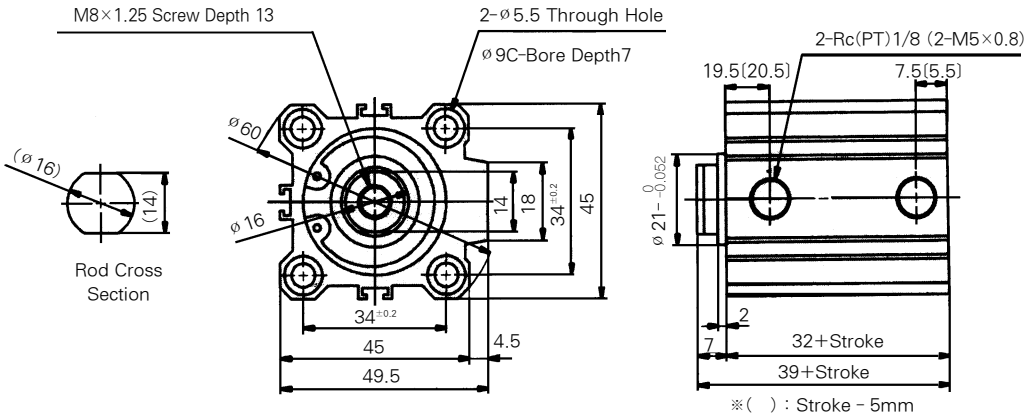

Rear Boss Mount

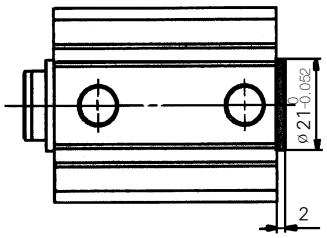

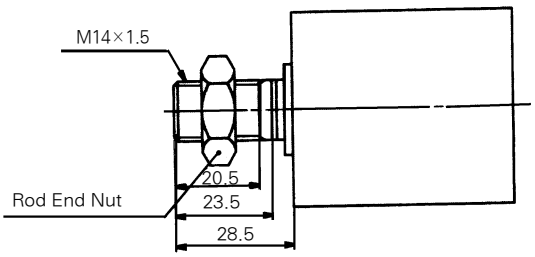

Double Acting/Non-Rotating Piston Rod/Single Rod Type : Dimensions

Bore Size : ø40~ø63

For the Dimension of
"A" type (Both End Tapped)
Please refer to Page A-196

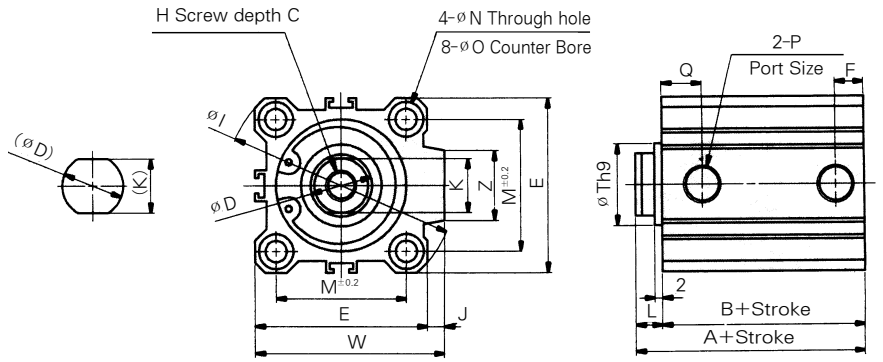

Rear Boss Mount

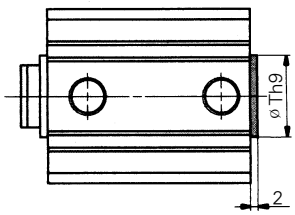

Rear Boss Mount (mm)

Bore Size (mm)	Th9
ø40	$28^{0}_{-0.052}$
ø50	$35^{0}_{-0.062}$
ø63	$35^{0}_{-0.062}$

Rod End Male Thread

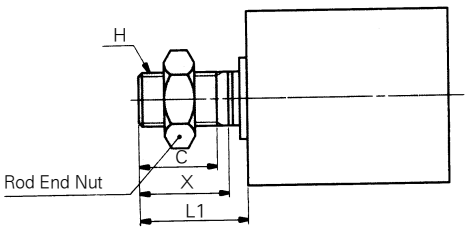

Rod End Male Thread (mm)

Bore Size (mm)	C	H	L1	X
ø40	20.5	M14×1.5	28.5	23.5
ø50	26	M18×1.5	33.5	28.5
ø63	26	M18×1.5	33.5	28.5

Standard Type

(Unit : mm)

Bore size (mm)	Stroke range (mm)	A	B	C	D	E	F	H	I	J	K	L	M	N	øO	P	Q	Th9	W	Z
ø40	5~50	36.5	29.5	13	16	52	8	M8×1.25	69	5	14	7	40	5.5	9Depth7	Rc(PT) 1/8	11	$28^{0}_{-0.052}$	57	18
	75, 100	46.5	39.5																	
ø50	10~50	38.5	30.5	15	20	64	10.5	M10×1.5	86	7	18	8	50	6.6	11Depth8	Rc(PT) 1/4	10.5	$35^{0}_{-0.062}$	71	22
	75, 100	48.5	40.5																	
ø63	10~50	44	36	15	20	77	10.5	M10×1.5	103	7	18	8	60	9	14Depth10.5	Rc(PT) 1/4	15	$35^{0}_{-0.062}$	84	22
	75, 100	54	46																	

Double Acting/Double Rod Type : Dimensions

Bore Size : ø20~ø25

For the Dimension of
"A" type (Both End Tapped)
Please refer to Page A-196

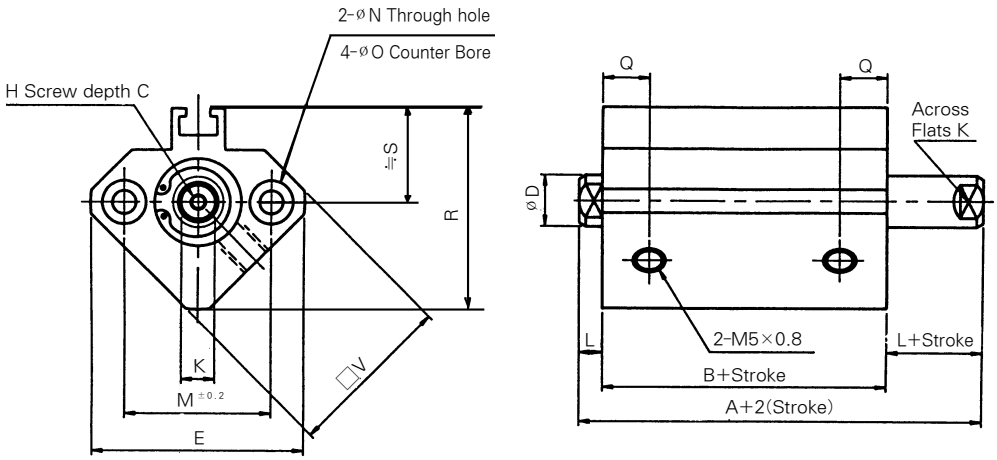

Rod End Male Thread

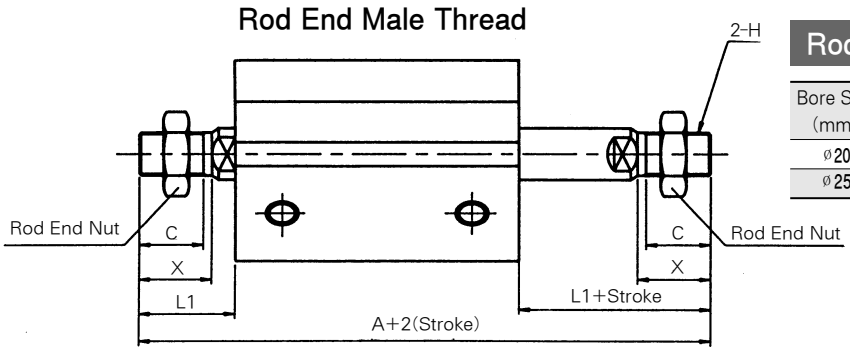

Rod End Male Thread (mm)

Bore Size (mm)	A	C	H	L1	X
ø20	63	12	M8×1.25	18.5	14
ø25	74	15	M8×1.25	22.5	17.5

Standard Type

(Unit : mm)

Bore size (mm)	Stroke range (mm)	A	B	C	D	E	H	K	L	M	N	øO	Q	R	S	□V
ø20	5~50	35	26	7	10	47	M8×1.25	8	4.5	36	5.5	9Depth7	9.5	48	24.5	36
ø25	5~50	39	29	12	12	52	M8×1.25	10	5	40	5.5	9Depth7	11	53.5	27.5	40

Double Acting/Double Rod Type : Dimensions

Bore Size : ø 32~ø 100

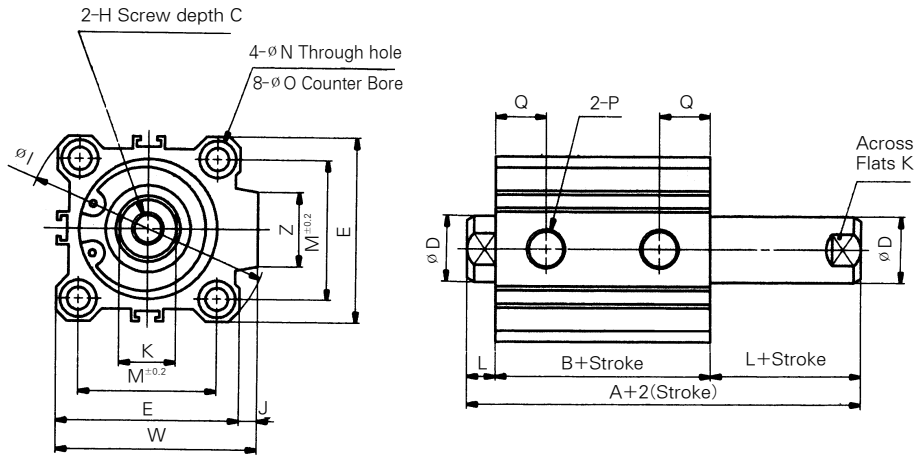

Rod End Male Thread

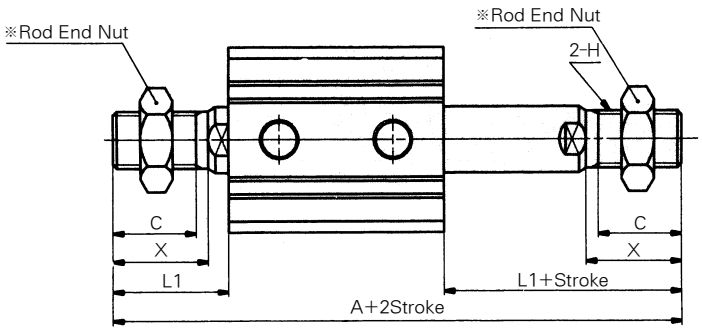

Rod End Male Thread (mm)

Bore Size (mm)	A	C	H	L1	X
ø32	87.5	20.5	M14×1.5	28.5	23.5
ø40	97	20.5	M14×1.5	28.5	23.5
ø50	107.5	26	M18×1.5	33.5	28.5
ø63	109	26	M18×1.5	33.5	28.5
ø80	138	32.5	M22×1.5	43.5	35.5
ø100	147.5	32.5	M22×1.5	43.5	35.5

Standard Type

(Unit : mm)

Bore size (mm)	Stroke range (mm)	A	B	C	D	E	H	I	J	K	L	M	N	øO	P	Q	W	Z
ø32	5 10~100	44.5	30.5	13	16	45	M8×1.25	60	4.5	14	7	34	5.5	9Depth7	M5×0.8 1/8Rc(PT)	12.5	49.5	18
ø40	5~100	54	40	13	16	52	M8×1.25	69	5	14	7	40	5.5	9Depth7	M5×0.8 1/8Rc(PT)	14	57	18
ø50	10~100	56.5	40.5	15	20	64	M10×1.5	86	7	17	8	50	6.6	11Depth8	M5×0.8 1/4Rc(PT)	14	71	22
ø63	10~100	58	42	15	20	77	M10×1.5	103	7	17	8	60	9	14Depth10.5	M5×0.8 1/4Rc(PT)	15.5	84	22
ø80	10~100	71	51	21	25	98	M16×2.0	132	6	22	10	77	11	17Depth13.5	M5×0.8 3/8Rc(PT)	18	104	26
ø100	10~100	84.5	60.5	27	30	117	M20×2.5	156	6.5	27	12	94	11	17Depth13.5	M5×0.8 3/8Rc(PT)	22	123.5	26

Double Acting/Non-Rotating Piston Rod/Double Rod Type : Dimensions

Bore Size : ø20 ~ ø25

Through Hole

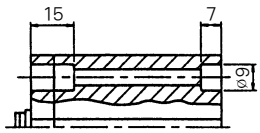

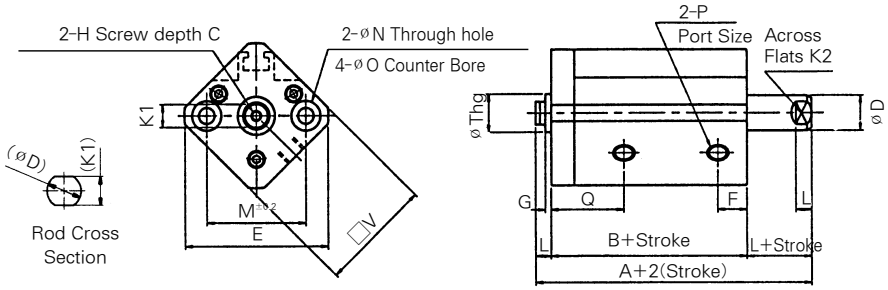

Bore size : ø32

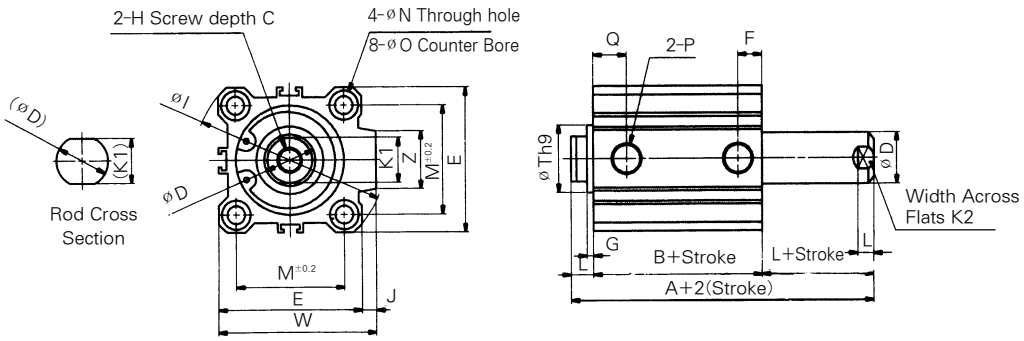

Rod End Male Thread

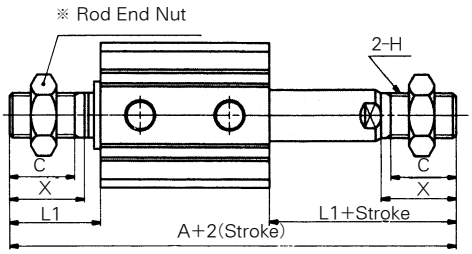

Rod End Male Thread (mm)

Bore Size (mm)	A	C	H
ø20	71	12	M8×1.25
ø25	82	15	M10×1.25
ø32	96.5	20.5	M14×1.25

Bore Size (mm)	L1	X
ø20	18.5	14
ø25	22.5	17.5
ø32	28.5	23.5

Standard Type

(Unit : mm)

Bore size (mm)	Stroke range (mm)	A	B	C	D	E	F	G	H	I	J	K1	K2	L	M	N	P	Q	R	S	Th9	W	Z	V
ø20	5~50	43	34	7	10	47	9.5	2	M8×0.8	-	-	8	8	4.5	36	5.5	M5×0.8	17.5	48	24.5	$13^{0}_{-0.043}$	-	-	36
ø25	5~50	47	37	12	12	52	11	2	M6×1.0	-	-	10	10	5	40	5.5	M8×0.8	19	53.5	27.5	$15^{0}_{-0.043}$	-	-	40
ø32	5	53.5	39.5	13	16	45	12.5	2	M8×1.25	60	4.5	14	14	7	34	5.5	M5×0.8	21.5	-	-	$21^{0}_{-0.052}$	49.5	18	-
	10~75																Rc(PT)1/8							

Double Acting/Non-Rotating Rod/Double Rod Type : Dimensions

Bore Size : ø40～ø63

For the Dimension of
"A" type (Both End Tapped)
Please refer to Page A-196

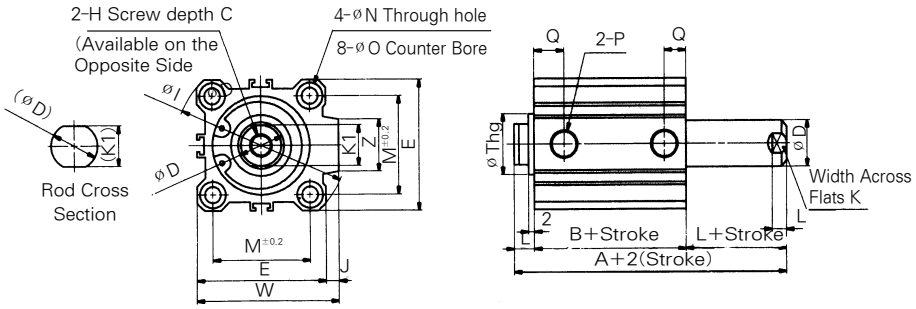

Rod End Male Thread

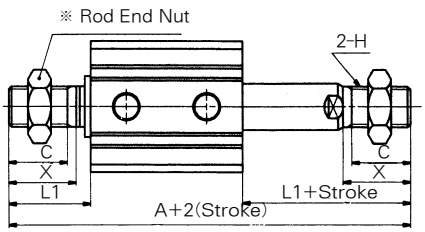

Rod End Male Thread (mm)

Bore Size (mm)	A	C	H	L1	X
ø40	97	20.5	M14×1.5	28.5	23.5
ø50	107.5	26	M18×1.5	33.5	28.5
ø63	109	26	M18×1.5	33.5	28.5

Standard Type (Unit : mm)

Bore size (mm)	Stroke range (mm)	A	B	C	D	E	H	I	J	K1	K2	L	M	N	øO	P	Q	Thg	W	Z
ø40	5～75	54	40	13	16	52	M8×1.25	69	5	14	14	7	40	5.5	9Depth7	Rc(PT)1/8	14	$28^{0}_{-0.052}$	57	18
ø50	10～75	56.5	40.5	15	20	64	M10×1.5	86	7	18	17	8	50	6.6	11Depth8	Rc(PT)1/4	14	$35^{0}_{-0.062}$	71	22
ø63	10～75	58	42	15	20	77	M10×1.5	103	7	18	17	8	50	9	14Depth10.5	Rc(PT)1/4	15.5	$35^{0}_{-0.062}$	84	22

Single Acting/Spring Return Type : Dimensions

Bore Size : ø20

For the Dimension of
"A" type (Both End Tapped)
Please refer to Page A-196

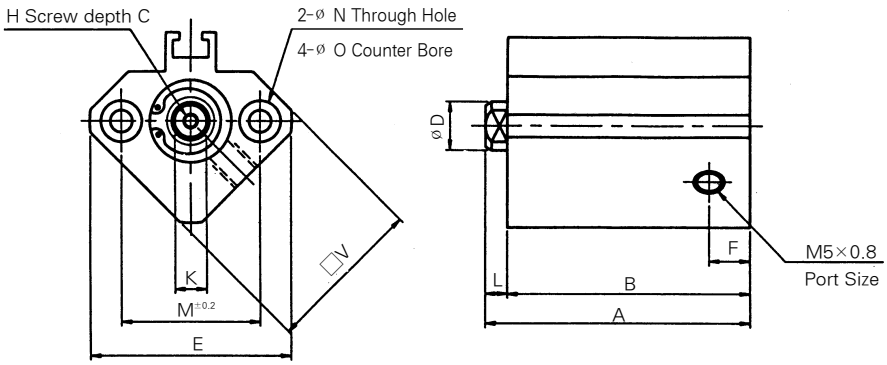

Rear Boss Mount

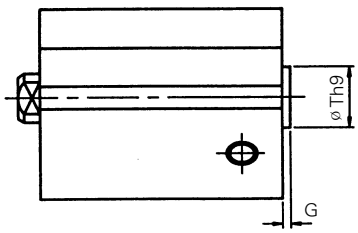

Rear Boss Mount (mm)

Bore Size (mm)	G	Th9
ø20	2	$13^{0}_{-0.043}$

Rod End Male Thread

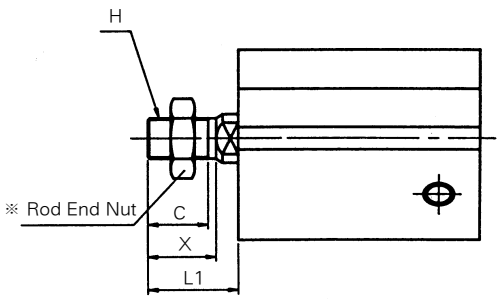

Rod End Male Thread (mm)

Bore size (mm)	C	X	H	L1
ø20	12	14	M5×0.8	18.5

Standard Type (Unit : mm)

Bore size (mm)	A		B		C	D	E	F	H	K	L	M	N	øO	□V
	5st	10st	5st	10st											
ø20	29	34	24.5	29.5	7	10	47	5.5	M5×0.8	8	4.5	26	5.5	9Depth7	36

Single Acting/Single Rod/Spring Return Type : Dimensions

Bore Size : ø32

For the Dimension of
"A" type (Both End Tapped)
Please refer to Page A-196

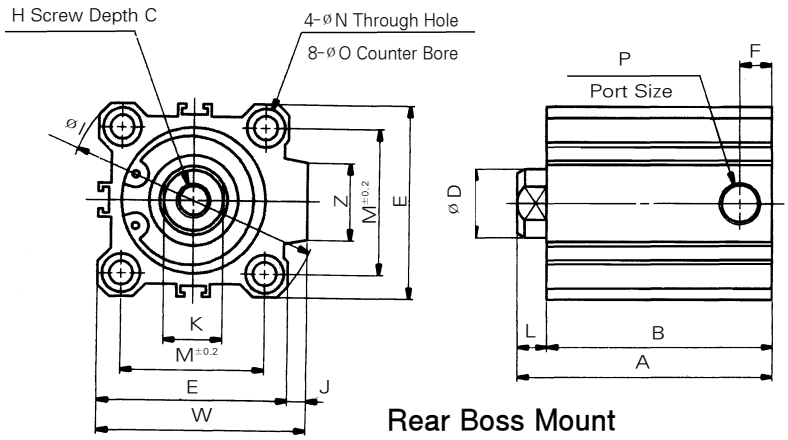

Rear Boss Mount

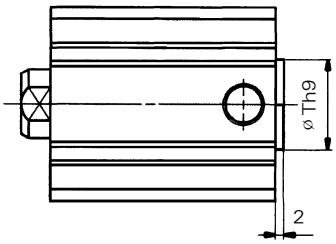

Rear Boss Mount (mm)

Bore Size (mm)	Th9
ø32	$21^{0}_{-0.052}$
ø40	$28^{0}_{-0.052}$
ø50	$35^{0}_{-0.062}$

Rod End Male Thread

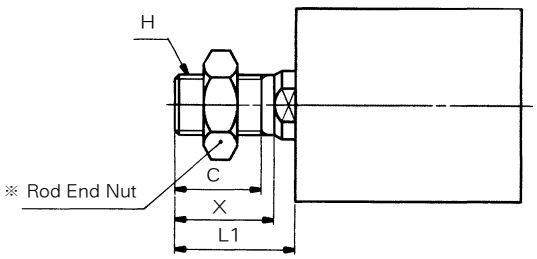

Rod End Male Thread (mm)

Bore Size (mm)	C	X	H	L1
ø32	20.5	23.5	M14×1.5	28.5
ø40	20.5	23.5	M14×1.5	28.5
ø50	26	28.5	M18×1.5	33.5

Standard Type

(Unit : mm)

Bore Size (mm)	A		B		C	D	E	F		H	I	J	K	L	M	N	øO	P		W	Z
	5st	10st	5st	10st				5st	10st									5st	10st		
ø32	35	40	28	33	13	16	45	5.5	7.5	M8×1.25	60	4.5	14	7	34	5.5	9Depth7	M8×0.8	Rc(PT)1/8	49.5	18
ø40	41.5	46.5	34.5	39.5	13	16	52	8	8	M8×1.25	69	5	14	7	40	5.5	9Depth7	Rc(PT) 1/8		57	18
ø50	-	48.5	-	40.4	15	20	64	-	10.5	M10×1.5	86	7	17	8	50	6.6	11Depth8	-	Rc(PT) 1/4	71	22

Single Acting/Single Rod/Spring Extended Type : Dimensions

Bore Size : ø20

For the Dimension of "A" type (Both End Tapped) Please refer to Page A-196

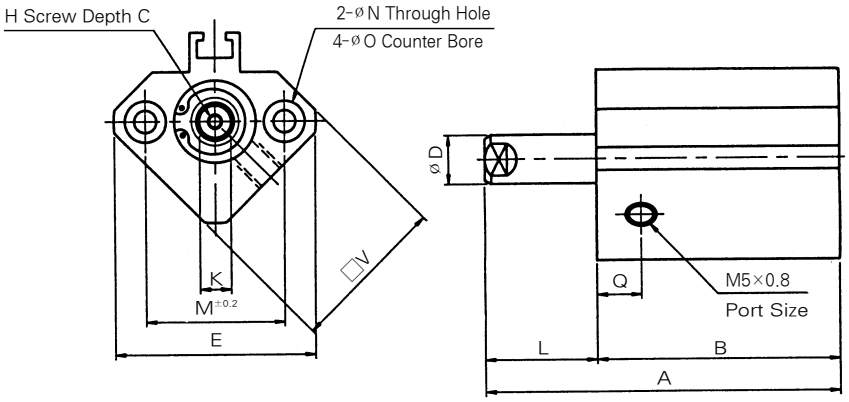

Rear Boss Mount

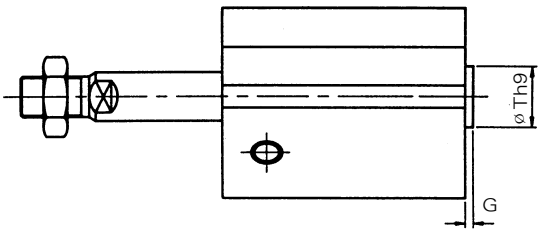

Rear Boss Mount (mm)

Bore Size (mm)	G	Th9
ø20	2	$13^{0}_{-0.043}$

Rod End Male Thead

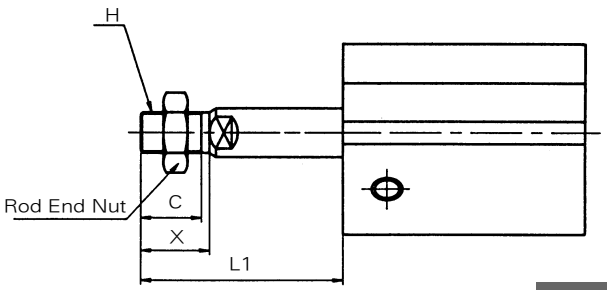

Rod End Male Thead (mm)

Bore Size mm	C	X	H	L1	
				5st	10st
ø20	12	14	M5×0.8	23.5	28.5

Standard Type (Unit : mm)

Bore Size (mm)	A		B		C	D	E	H	K	L		M	N	øO	Q	□V
	5st	10st	5st	10st						5st	10st					
ø20	34	44	24.5	29.5	7	10	47	M5×0.8	8	9.5	14.5	36	5.5	9 Depth 7	10.5	36

Single Acting/Single Rod/Spring Extend Type : Dimensions

Bore Size : ø32 ~ ø50

For the Dimension of
"A" type (Both End Tapped)
Please refer to Page A-196

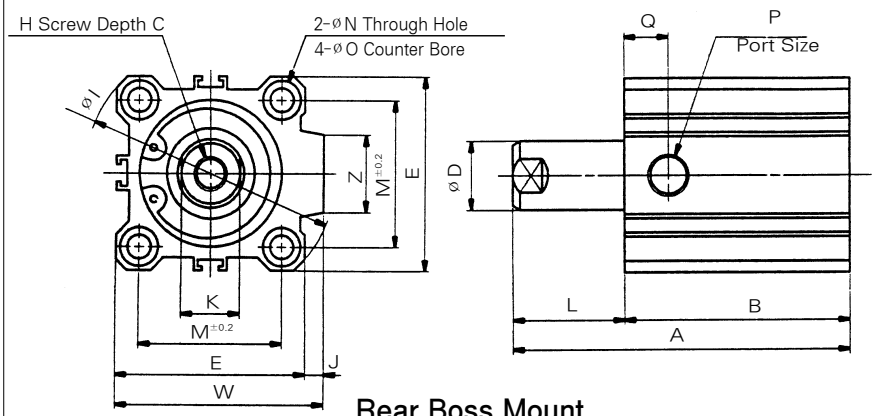

Rear Boss Mount

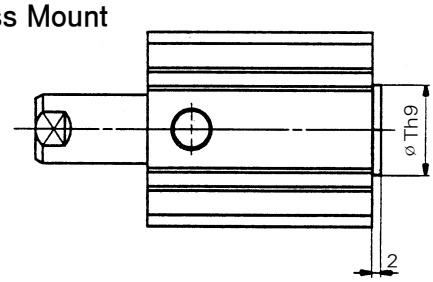

Rear Boss Mount (mm)

Bore Size (mm)	Th9
ø32	$21^{0}_{-0.052}$
ø40	$28^{0}_{-0.052}$
ø50	$35^{0}_{-0.062}$

Rod End Male Thead

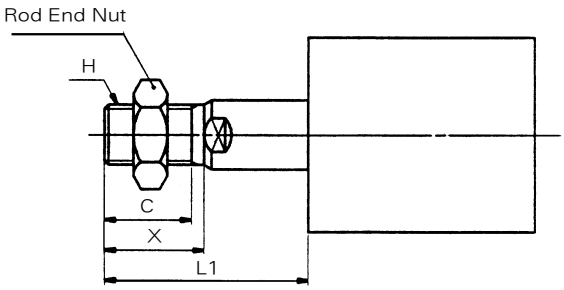

Rod End Male Thead (mm)

Bore Size (mm)	C	X	H	L1		
				5st	10st	20st
ø32	20.5	23.5	M14×1.5	33.5	38.5	-
ø40	20.5	23.5	M14×1.5	33.5	38.5	-
ø50	26	28.5	M18×1.5	-	43.5	53.5

Standard Type

(Unit : mm)

Bore Size (mm)	A		B		C	D	E	H	I	J	K	L		M	N	øO	P		Q		W	Z
	5st	10st	5st	10st								5st	10st				5st	10st	5st	10st		
ø32	40	50	28	33	13	16	45	M8×1.25	60	4.5	14	12	17	34	5.5	9 Depth 7	M5×0.8	NPT 1/8	11.5	10.5	49.5	18
ø40	46.5	56.5	34.5	39.5	13	16	52	M8×1.25	69	5	14	12	17	40	5.5	9 Depth 7	Rc(PT) 1/8		11	11	57	18
ø50	-	58.5	-	40.5	15	20	64	M10×1.5	86	7	17	-	18	50	6.6	11 Depth 8	-	Rc(PT) 1/4	-	10.5	71	22

Series ADQ

With Auto Switch/Double Acting Type, Single Acting Type

Bore Size (mm) : ø12, ø16, ø20, ø25, ø32, ø40, ø50, ø63, ø80, ø100

- SPACE SAVING DESIGN
- LIGHT WEIGHT
- 10 BORE SIZES
- AUTO SWITCH CAPABLE
- CYLINDERS FOR SPECIAL APPLICATIONS
- MANUFACTURING CERTIFIED TO ISO 9001&9002 STANDARDS

Symbol

Double Acting / Single Rod Type

Double Acting / Double Rod Type

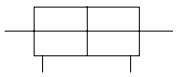

How to Order

For details, please refer to Page.A-161

Model/Standard Stroke

Bore Size (mm)	Double acting				Single acting		Applicable Auto Switch
	Single Rod Type	Double Rod Type	Non-Rotating Rod Type	Rear Boss Mount Type	Spring Return Type	Spring Extended Type	
	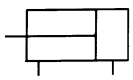	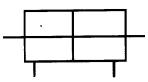	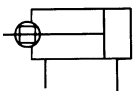	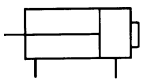	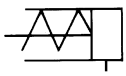	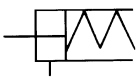	
	Standard Stroke(mm)				Standard Stroke(mm)		Reed Switch
ø12	5, 10, 15 20, 25, 30	–	–	5, 10, 15 20, 25, 30	–	–	Grommet Type W4
ø16							
ø20	5, 10, 15, 20, 25, 30, 35, 40, 45, 50, 75	5, 10, 15, 20, 25, 30, 35, 40, 45, 50	5, 10, 15, 20, 25, 30, 35, 40, 45, 50, 75	5, 10, 15, 20, 25, 30, 35, 40, 45, 50, 75	5, 10	5, 10	
ø25					–	–	
ø32	5, 10, 15, 20, 25, 30, 35, 40, 45, 50, 75, 100, 125, 150	5, 10, 15, 20, 25, 30, 35, 40, 45, 50, 75, 100	5, 10, 15, 20, 25, 30, 35, 40, 45, 50, 75, 100, 125, 150	5, 10, 15, 20, 25, 30, 35, 40, 45, 50, 75, 100, 125, 150	5, 10	5, 10	
ø40							
ø50	10, 15, 20, 25, 30, 35, 40, 45, 50, 75, 100, 125, 150	10, 15, 20, 25, 25, 30, 35, 40, 45, 50, 75, 100	10, 15, 20, 25, 25, 30, 35, 40, 45, 50, 75, 100	10, 15, 20, 25, 25, 30, 35, 40, 45, 50, 75, 100, 125, 150	10	10	
ø63					–	–	
ø80			–				
ø100							

Intermediate Stroke

A Spacer of 5, 10, 15 and 20mm is used for intermediate stroke between 55 and 100mm stroke(55, 60, 65...).
(Example) AQB50-55D is produced by installing 20mm spacer in AQB50-75.

Standard/Specifications

Fluid	Air
Max. Operating Pressure	1.0MPa (9.9kgf/cm²)
Min. Operating Pressure	0.5kgf/cm² {ø12ø16: 0.7kgf/cm²}
Ambient and Fluid Temperature	-10~60℃
Lubrication	Not Required
Cushion	None
Rod End Thead	Female (Standard Type)
Stroke Tolerance	$^{+1.0}_{0}$ mm
Mounting	Through Hole (Standard)
Piston Speed	50~500mm/sec

Body Optional

Name	Applicable Type
Cushion	Rubber Cushion
Rod End Male Thread	Option
Boss Mount	Rear Boss Mount Type (Optional)
Non-Rotating Rod Type	Double Acting/Single Rod Type Only

Non - Rotating Rod Accuracy (Non-Rotating Piston Rod Type

Bore Size mm	ø20	ø32	ø40	ø50	ø63
Non-Rotating Rod Accuracy	±1°	±0.8°			

Min. Auto Switch Mountable Stroke

No. of Auto Switch	Min. Auto Switch Mountable Stroke
With 1pc	5mm
With 2pcs	10mm

Auto Switch Specification

Reed Switch Type (Please Refer to Page A-202)

Auto Switch Model	W4	
Application	Relay, Sequence Control	
Load Voltage	120VAC, 24VDC	
Range of Load Current	5~40 mA	5~20 mA
Protection Circuit for Contact Braker Point	Non	
Internal Voltage Drop	2.4V or Less	
Indicator Lamp	ON : Red Light Emitting Diode	

- Leak Current - Non
- Response Time - 1.2ms
- Lead Wire - Oil Proof vinyl, ø3.4, 0.2㎟ 2wire(red, black), ※
- Impact Resistance - 30G
- Insulation Resistance - 50MΩ or more under the test voltage 500VDC(between case and cable)
- Dielectric Resistance - 1500VAC 1min(between case and cable)
- Ambient Temperature
- Protection Structure - IEC spec IP67, Water-proof, Oil-proof.

※ If 300mm lead wire is required, L is put at the end of model numbers.
(Example) W4L

Construction/Parts List

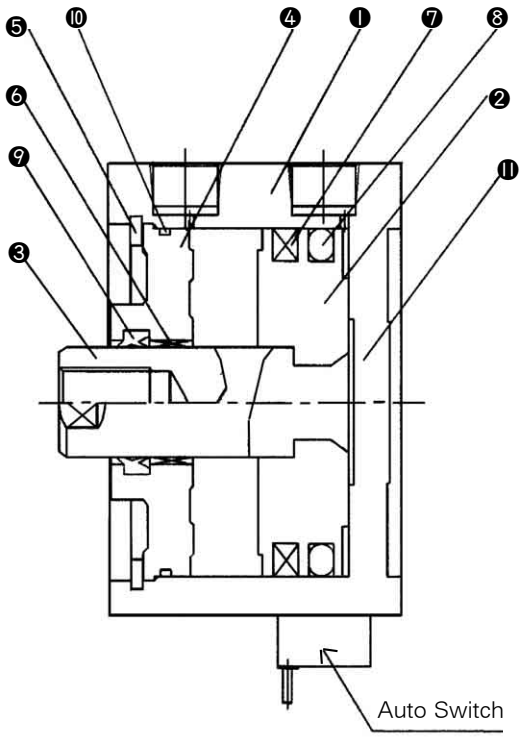

Parts LIST

No.	Descritpion	Material	Note
❶	Cylinder Tube	Aluminum Alloy	-
❷	Piston	Aluminum Alloy	Chromate
❸	Piston Rod	Stainless Steel	ø12 ~ ø25
		Carbon Steel	ø32 ~ ø100
❹	Collar	Aluminum Bearing Alloy	ø12 ~ ø40
		Aluminum Alloy Casting	ø50 ~ ø100
❺	Retaining Ring	Carbon Steel	Black Zinc Chromate
❻	Bushing	Lead Bronze Casting	Only Above Bore:50
❼	Rubber Magnet	-	-

Seals List

No.	Description	Material	Parts No.									
			12	16	20	25	32	40	50	63	80	100
❽	Piston Packing	NBR	NLP-12	NLP-16A	NLP-20A	NLP-25A	NLP-32A	NLP-40A	NLP-50A	NLP-63A	NLP-80A	NLP-100A
❾	Rod Packing	NBR	DYR-6K	DYR-8K	DYR-10SK	DYR-12	DYR-16	PDU-16Z	PDU-20Z	PDU-20Z	PDU-25Z	PDU-30Z
❿	Gasket	NBR	SO-013-6	C14	C18	C22	C29	C36	C46	C60	C75	C95

Auto Switch Mounting Date

W4

Bore size: ø12～ø25

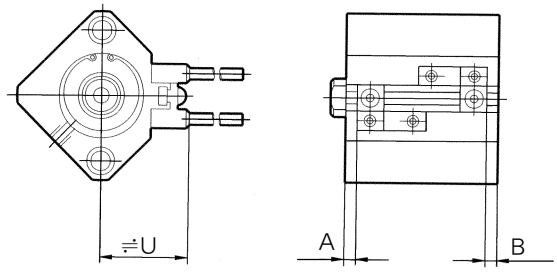

Bore Size: ø32～ø100

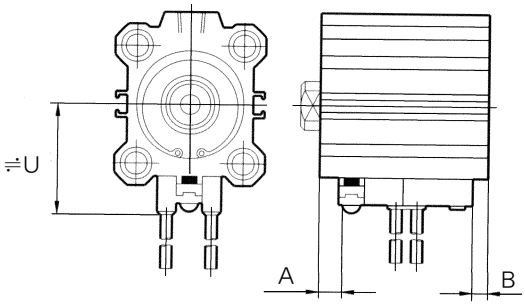

Auto Switch Mounting Position

Bore size (mm)	A (mm)	B (mm)	U (mm)
ø 12	5	6	19.5
ø 16	8	5.5	22.5
ø 20	8	7	24.5
ø 25	8	7.5	27.5
ø 32	9.5	6.5	31.5
ø 40	13.5	9	35
ø 50	11.5	12	41
ø 63	14	15	47.5
ø 80	18	18.5	57.5
ø 100	21.5	24.5	67.5

Weight/Double Acting, Single Rod

(kgf)

Bore Size	Stroke (mm)												Additional Weight for Male Thread
	5	10	15	20	25	30	35	40	45	50	75	100	
ø 12	40	47	54	61	68	75	-	-	-	-	-	-	2
ø 16	61	72	83	94	105	116	-	-	-	-	-	-	3
ø 20	91	112	132	152	173	193	213	234	254	274	-	-	7
ø 25	118	139	160	181	203	224	245	266	287	309	-	-	17
ø 32	157	180	202	225	248	270	292	316	339	362	522	636	40
ø 40	272	294	316	338	360	382	404	426	448	470	623	733	40
ø 50	-	401	439	476	514	551	589	626	663	701	958	1102	80
ø 63	-	647	687	727	767	807	847	987	927	967	1257	1464	80
ø 80	-	1443	1534	1624	1714	1804	1894	1985	2076	2166	2830	3296	160
ø 100	-	2208	2314	2420	2526	2632	2738	2844	2950	3056	3801	4318	270

With Auto Switch : Double Acting/Single Rod Type : Dimensions

Bore Size: ø12~ø25

For the Dimension of "A" type (Both End Tapped) Please refer to Page A-196

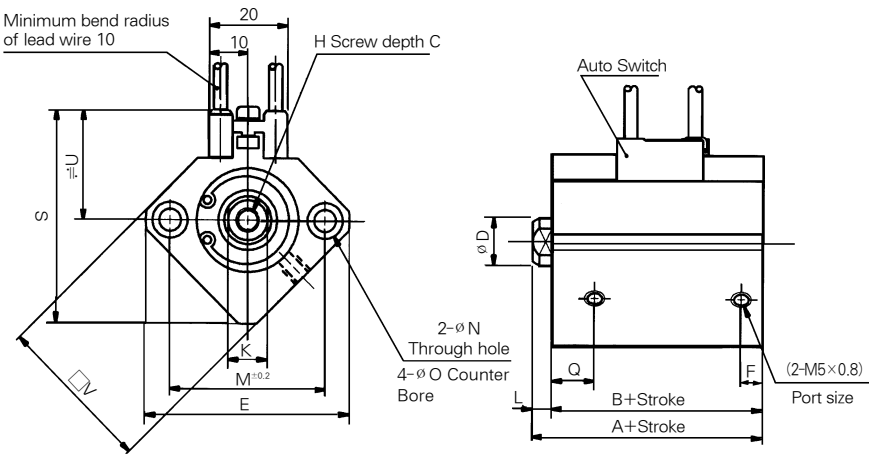

Rear Boss Mount

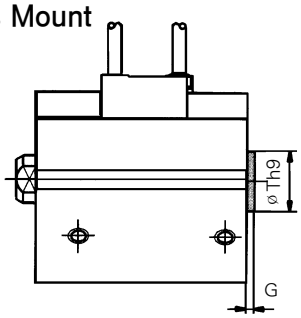

Rear Boss Mount

Bore size (mm)	G	Th9
ø12	1.5	$15^{0}_{-0.043}$
ø16	1.5	$20^{0}_{-0.052}$
ø20	2	$13^{0}_{-0.043}$
ø25	2	$15^{0}_{-0.043}$

Rod End Male Thread

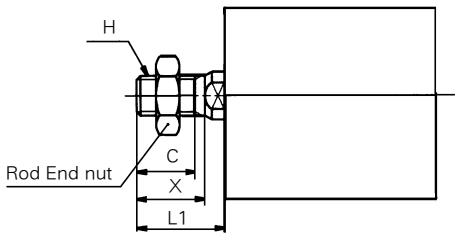

Rod End Male Thread

Bore size (mm)	C	X	H	L1
ø12	9	10.5	M5×0.8	14
ø16	10	12	M6×1.0	15.5
ø20	12	14	M8×1.25	18.5
ø25	15	17.5	M10×1.25	22.5

Standard Type

(unit:mm)

Bore size (mm)	Stroke range (mm)	A	B	C	D	E	F	H	K	L	M	N	øO	Q	S	U	V
ø12	5~30	31.5	28	6	6	32	6.5	M3×0.5	5	3.5	22	3.5	6.5 Depth3.5	11	35.5	19.5	25
ø16	5~30	34	30.5	8	8	38	5.5	M4×0.7	6	3.5	28	3.5	6.5 Depth 3.5	10	41.5	22.5	29
ø20	5~50	36	31.5	7	10	47	5.5	M5×0.8	8	4.5	36	6.5	9 Depth 7	10.5	48	24.5	36
	75	55.5	41							14.5							
ø25	5~50	37.5	32.5	12	12	52	5.5	M6×1.0	10	5	40	5.5	9 Depth 7	11	53.5	27.5	40

With Auto Switch : Double Acting/Single Rod Type : Dimensions

Bore Size : ø32～ø100

For the Dimension of
"A" type (Both End Tapped)
Please refer to Page A-196

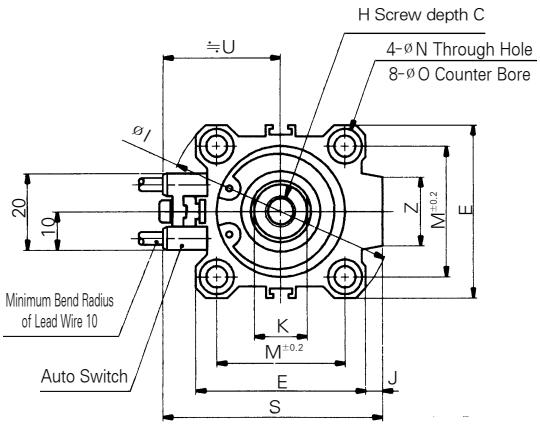

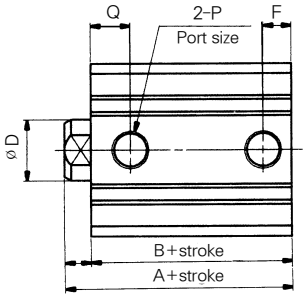

Long Stroke(125st or more) (mm)

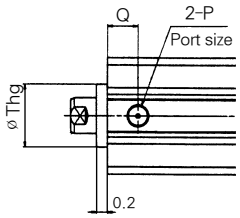

Bore size	T
32	$22^{0}_{-0.052}$
40	$28^{0}_{-0.052}$
50・63	$35^{0}_{-0.062}$
80	$43^{0}_{-0.062}$
100	$59^{0}_{-0.074}$

Rear Boss Mount

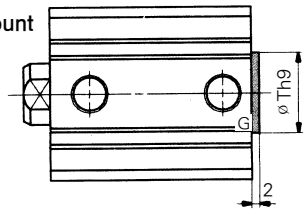

Rear Boss Mount (Unit : mm)

Bore size (mm)	Th9
ø32	$21^{0}_{-0.052}$
ø40	$28^{0}_{-0.052}$
ø50	$35^{0}_{-0.062}$
ø63	$35^{0}_{-0.062}$
ø80	$43^{0}_{-0.062}$
ø100	$59^{0}_{-0.074}$

Rod End Male Thread

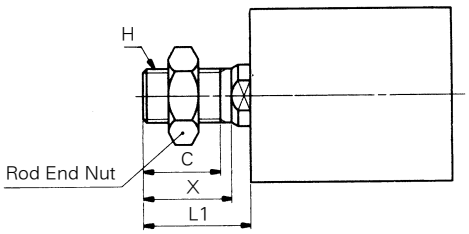

Rod End Male Thread (Unit : mm)

Bore size (mm)	C	X	H	L1
ø32	20.5	23.5	M14×1.5	28.5
ø40	20.5	23.5	M14×1.5	28.5
ø50	26	28.5	M18×1.5	33.5
ø63	26	28.5	M22×1.5	33.5
ø80	32.5	35.5	M22×1.5	43.5
ø100	32.5	35.5	M26×1.5	43.5

Standard (Unit : mm)

Bore size (mm)	Stroke range (mm)	A	B	C	D	E	F	H	I	J	K	L	M	N	øO	P	Q	S	U	Z
ø32	5~50	40	33	13	16	45	7.5	M8×1.25	60	4.5	14	7	34	5.5	9 Depth 7	Rc(PT) 1/8	10.5	58.5	31.5	18
	75, 100																			
	125, 150	62.5	45.5				12.5					17					12.5			
ø40	5~50	46.5	39.5	13	16	52	8	M8×1.25	69	5	14	7	40	5.5	9 Depth 7	Rc(PT) 1/8	11	66	35	18
	75,100																			
	125, 150	72	55				14					17					14			
ø50	10~50	48.5	40.5	15	20	64	10.5	M10×1.5	86	7	17	8	50	6.6	11 Depth 8	Rc(PT) 1/4	10.5	80	41	22
	75,100																			
	125, 150	73.5	55.5				14					18					14			
ø63	10~50	54	46	15	20	77	10.5	M10×1.5	103	7	17	8	60	9	14 Depth 10.5	Rc(PT) 1/4	15	93	47.5	22
	75,100																			
	125, 150	75	57				16.5					18					16.5			
ø80	10~50	63.5	53.5	21	25	98	12.5	M16×2.0	132	6	22	10	77	11	17.5 Depth 13.5	Rc(PT) 3/8	16	112.5	57.5	26
	75,100																			
	125, 150	86	66				19					20					19			
ø100	10~50	75	63	27	30	117	13	M20×2.5	156	6.5	27	12	94	11	17.5 Depth 13.5	Rc(PT) 3/8	23	132.5	67.5	26
	75,100																			
	125, 150	97.5	75.5				23					22								

With Auto Switch:Double Acting/Non-Rotating Rod/Single Rod Type:Dimensions

Bore Size : ø20, ø25

For the Dimension of
"A" type (Both End Tapped)
Please refer to Page A-196

Through Hole

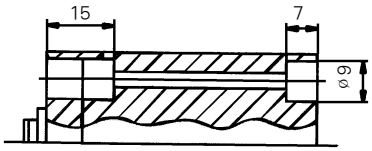

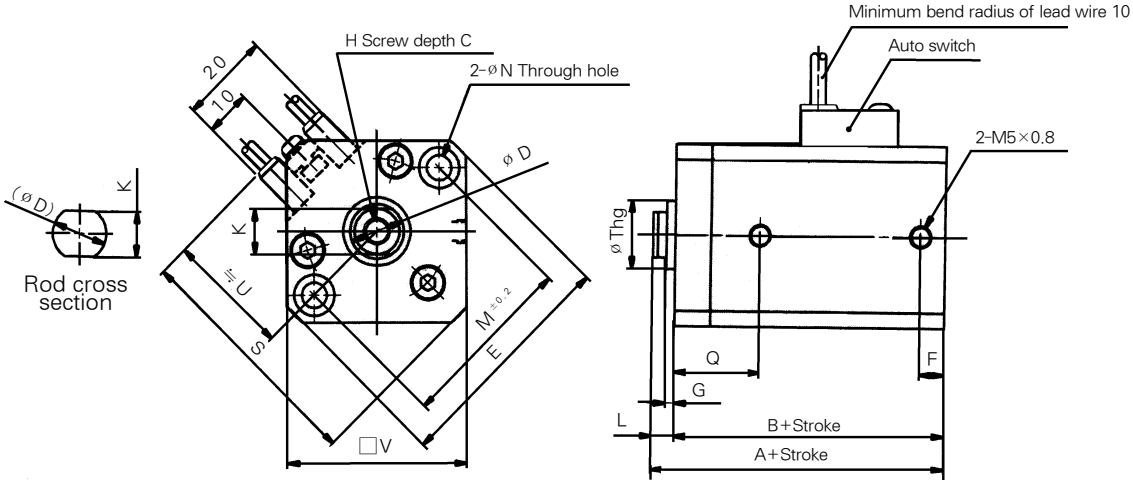

Rear Boss Mount

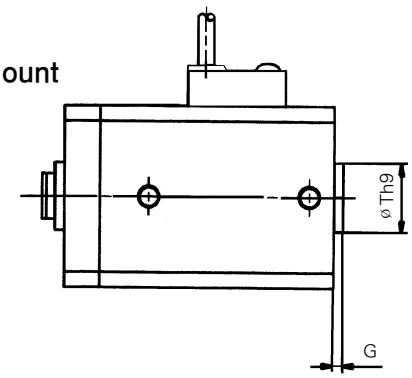

Rod End Male Thread

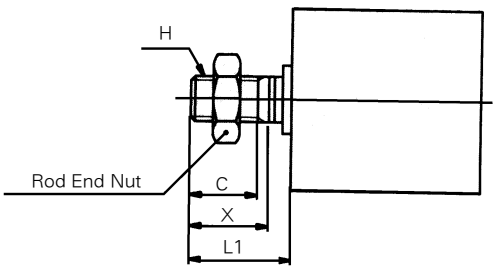

Rod End Male Thread

Bore size (mm)	C	H	L1	X
ø20	12	M5×1.25	18.5	14
ø25	12	M10×1.25	18.5	14

Standard

Bore size (mm)	Stroke range (mm)	A	B	C	D	E	F	G	H	K	L	M	N	Q	S	Th9	U	V
ø20	5~50	44	39.5	7	10	47	5.5	2	M5×0.8	8	4.5	36	5.5	18.5	48	$13^{0}_{-0.043}$	24.5	36
ø25	5~50	45.5	40.5	12	12	52	5.5	2	M6×1.0	10	5	40	5.5	19	53.5	$15^{0}_{-0.043}$	27.5	40

With Auto Switch:Double Acting/Non-Rotating Rod/Single Rod Type:Dimensions

Bore Size : ø32

For the Dimension of
"A" type (Both End Tapped)
Please refer to Page A-196

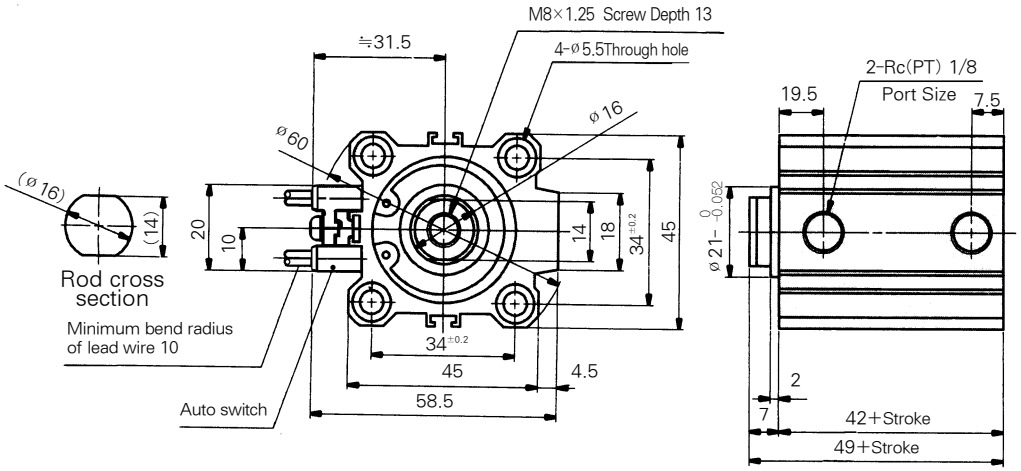

Rear Boss Mount

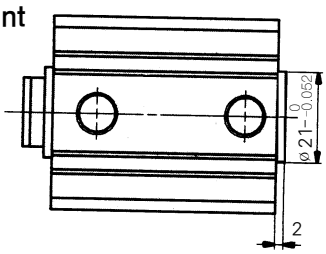

Rod End Male Thread

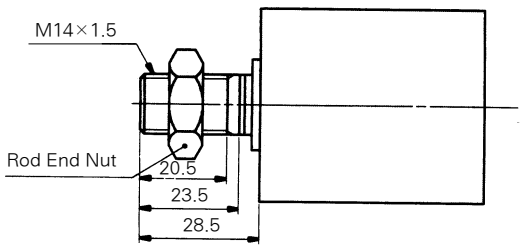

With Auto Switch:Double Acting/Non-Rotating Rod/Single Rod Type:Dimensions

Bore Size : ø40～ø63

For the Dimension of "A" type (Both End Tapped) Please refer to Page A-196

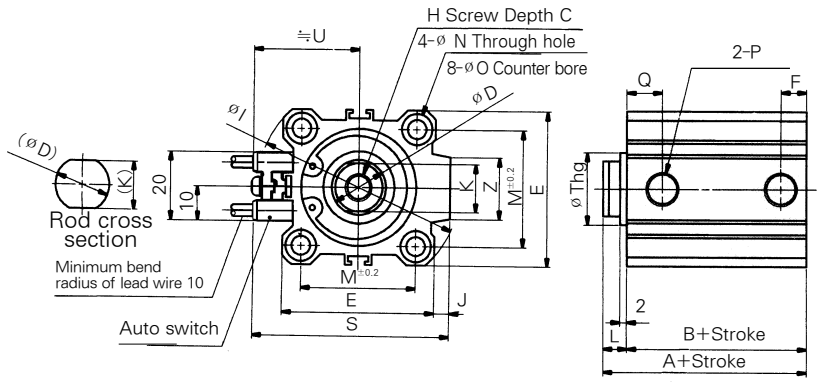

Rear Boss Mount

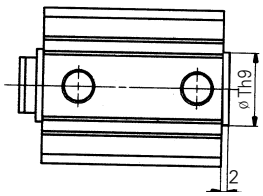

Rear Boss Mount (mm)

Bore size mm	Th9
ø40	28 $^{0}_{-0.052}$
ø50	35 $^{0}_{-0.062}$
ø63	35 $^{0}_{-0.062}$

Rod End Male Thread

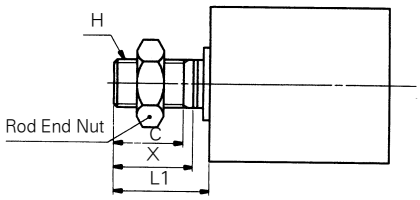

Rod End Male Thread (mm)

Bore size (mm)	C	H	L1	X
ø40	20.5	M14×1.5	28.5	23.5
ø50	26	M18×1.5	33.5	28.5
ø63	26	M18×1.5	33.5	28.5

Standard

Bore size (mm)	Stroke range (mm)	A	B	C	D	E	F	H	I	J	K	L	M	N	øO	P	Q	S	Thg	U	Z
ø40	5～50 75, 100	46.5	39.5	13	16	52	8	M8×1.25	69	5	14	7	40	5.5	9 Depth7	Rc(PT) 1/8	11	66	28 $^{0}_{-0.052}$	35	18
ø50	10～50 75, 100	48.5	40.5	15	20	64	10.5	M10×1.5	86	7	18	8	50	6.6	11Depth8	Rc(PT) 1/4	10.5	80	35 $^{0}_{-0.062}$	41	22
ø63	10～50 75, 100	54	46	15	20	77	10.5	M10×1.5	103	7	18	8	60	9	14Depth10.5	Rc(PT) 1/4	15	93	35 $^{0}_{-0.062}$	47.5	22

With Auto Switch: Double Acting/Double Rod Type: Dimensions (inch)

Bore Size : ø20 (3/4 Nom.), ø25 (1 Nom.)

For the Dimension of
"A" type (Both End Tapped)
Please refer to Page A-196

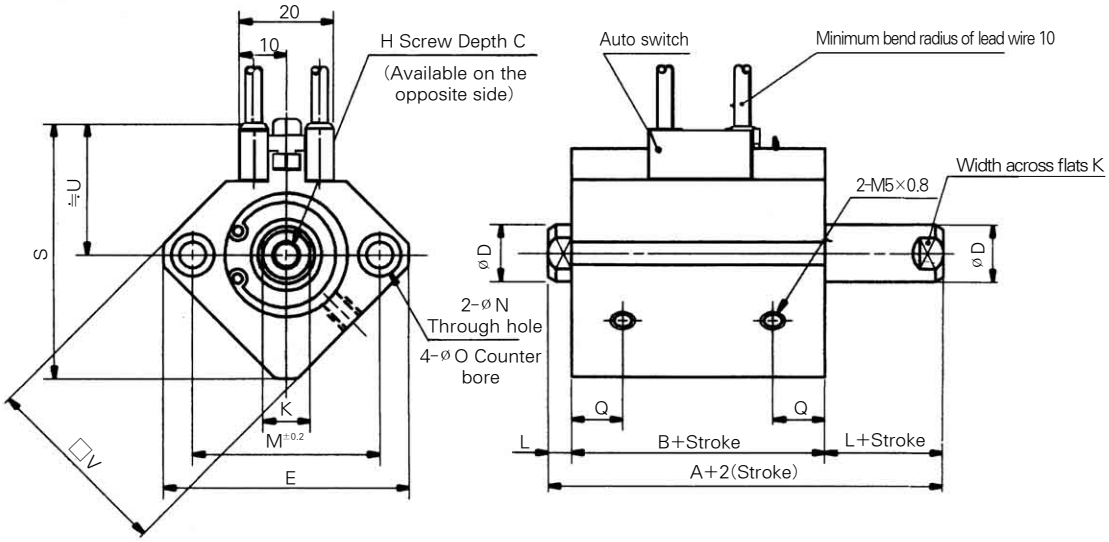

Rod End Male Thread

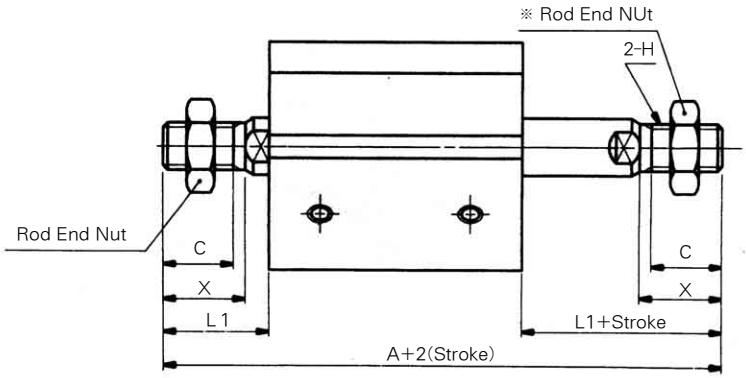

Rod End Male Thread (mm)

Bore size (mm)	A	C	H	L1	X
ø20	75	12	M8×1.25	18.5	14
ø25	84	15	M10×1.25	22.5	17.5

Standard (Unit : mm)

Bore size (mm)	Stroke range (mm)	A	B	C	D	E	H	K	L	M	N	øO	Q	S	U	V
ø20	5~75	47	38	7	10	47	M5×0.8	8	4.5	36	5.5	9 Depth7	10.5	48	24.5	36
ø25	5~50	49	39	12	12	52	M6×1.0	10	5	40	5.5	9 Depth7	11	53.5	27.5	40

With Auto Switch: Double Acting/Double Rod Type: Dimensions (mm)

Bore Size : ø32～ø100

For the Dimension of "A" type (Both End Tapped) Please refer to Page A-196

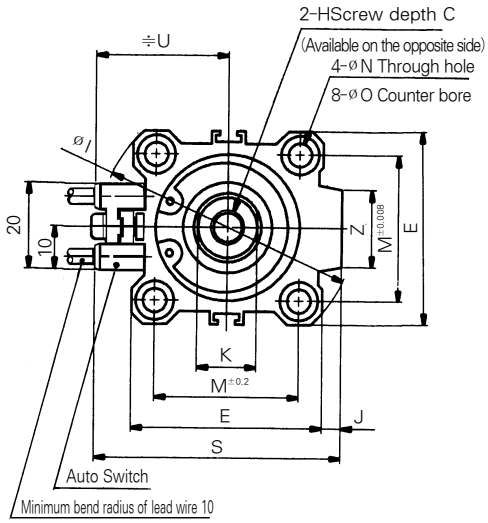

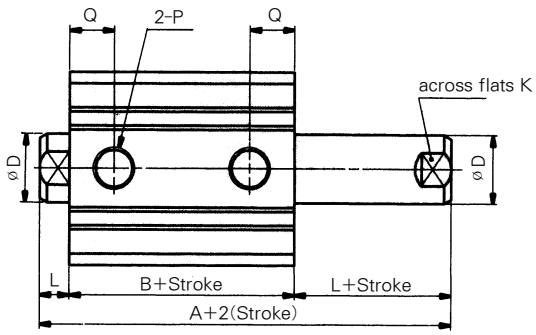

Rod End Male Thread

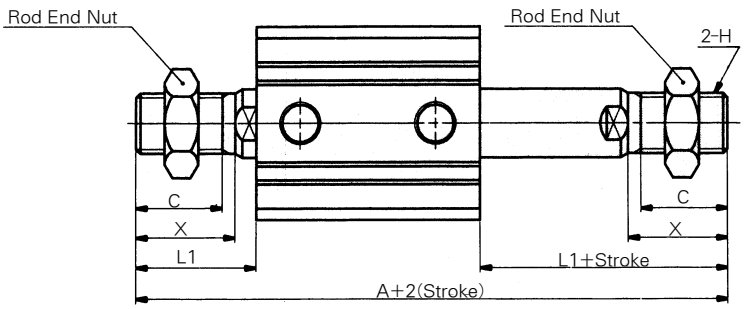

Rod End Male Thread (mm)

Bore size (mm)	A	C	H	L1	X
ø32	97.5	20.5	M14×1.5	28.5	23.5
ø40	107	20.5	M14×1.5	28.5	23.5
ø50	117.5	26	M18×1.5	33.5	28.5
ø63	119	26	M18×1.5	33.5	28.5
ø80	148	32.5	M22×1.5	43.5	35.5
ø100	157.5	32.5	M26×1.5	43.5	35.5

Standard (mm)

Bore size (mm)	Stroke range (mm)	A	B	C	D	E	H	I	J	K	L	M	N	øO	P	Q	S	U	Z
ø32	5～75	54.5	40.5	13	16	45	M8×1.25	60	4.5	14	7	34	5.5	9 Depth7	Rc(PT) 1/8	12.5	58.5	31.5	18
ø40	5～75	64	50	13	16	52	M8×1.25	69	5	14	7	40	5.5	9 Depth 7	Rc(PT) 1/8	14	66	35	18
ø50	10～75	66.5	50.5	15	20	64	M10×1.5	86	7	17	8	50	6.6	11 Depth 8	Rc(PT) 1/4	14	80	41	22
ø63	10～75	68	52	15	20	77	M10×1.5	103	7	17	8	60	9	14 Depth 10.5	Rc(PT) 1/4	15.5	93	47.5	22
ø80	10～75	81	61	21	25	98	M16×2.0	132	6	22	10	77	11	17.5 Depth 13.5	Rc(PT) 3/8	18	112.5	57.5	26
ø100	10～75	94.5	70.5	27	30	117	M20×2.5	156	6.5	27	12	94	11	17.5 Depth 13.5	Rc(PT) 3/8	22	132.5	67.5	26

With Auto Switch: Double Acting / Double Rod / Non-rotating Rod / Dimensions

Bore Size : ø 20 ~ ø 25

For the Dimension of "A" type (Both End Tapped) Please refer to Page A-196

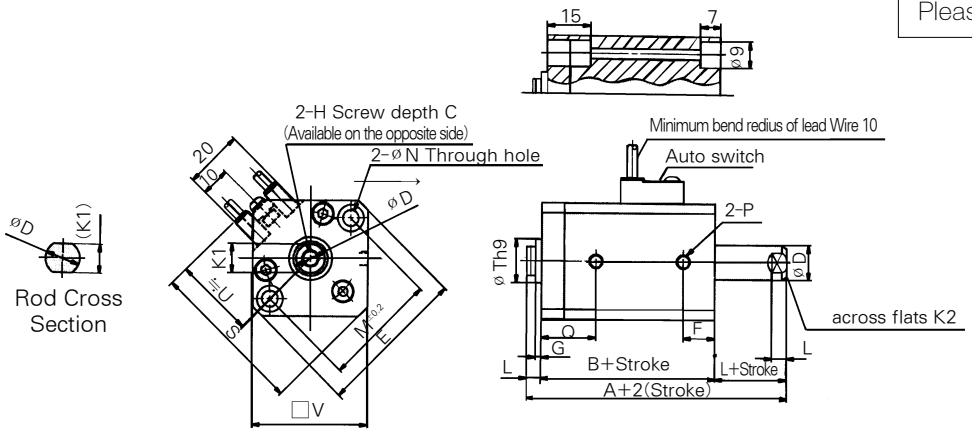

Bore Size: ø 32

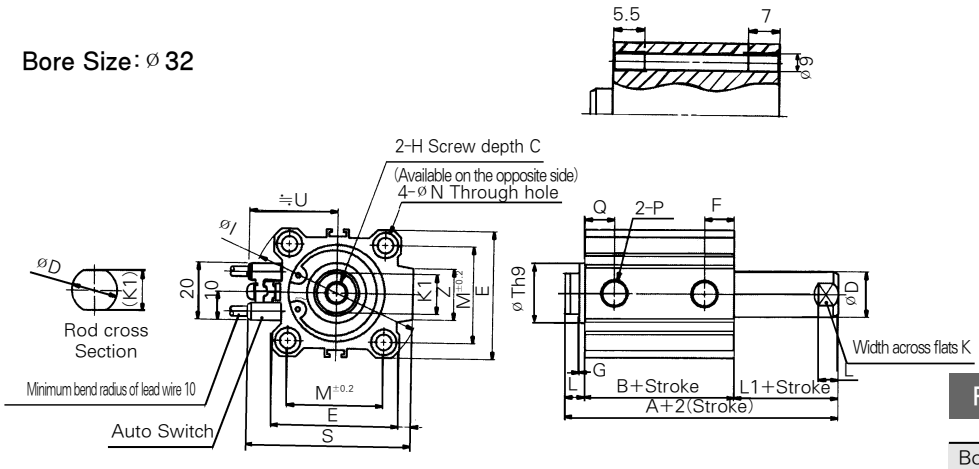

Rod End Male Thread

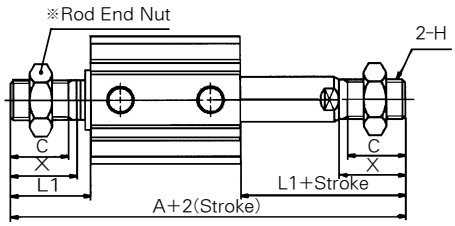

Rod End Male Thread (mm)

Bore size (mm)	A	C	H
ø20	83	12	M8×1.25
ø25	92	15	M10×1.25
ø32	106.5	20.5	M14×1.25

Bore size (mm)	L1	X
ø20	18.5	14
ø25	22.5	17.5
ø32	28.5	23.5

Standard

(Unit : mm)

Bore size (mm)	Stroke range (mm)	A	B	C	D	E	F	G	H	I	J	K1	K2	L	M	N	P	Q	S	Th9	U	V	Z
ø20	5~50	55	46	7	10	47	10.5	2	M5×0.8	-	-	8	8	4.5	36	5.5	M5×0.8	18.5	48	$13^{0}_{-0.043}$	24.5	36	-
ø25	5~50	57	47	12	12	52	11	2	M6×1.0	-	-	10	10	5	40	5.5	M5×0.8	19	53.5	$15^{0}_{-0.043}$	27.5	40	-
ø32	5~75	63.5	49.5	13	16	45	12.5	2	M8×1.25	60	4.5	14	14	7	34	5.5	Rc(PT)1/8	21.5	58.5	$21^{0}_{-0.052}$	31.5	-	18

With Auto Switch: Double Acting / Double Rod / Non-rotating Piston Rod 1 : Dimensions

Bore Size : ø40～ø63

For the Dimension of "A" type (Both End Tapped) Please refer to Page A-196

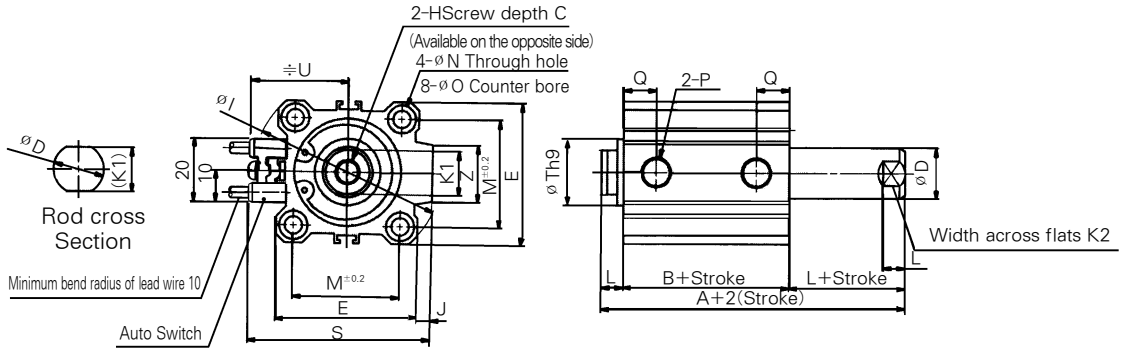

Rod End Male Thread

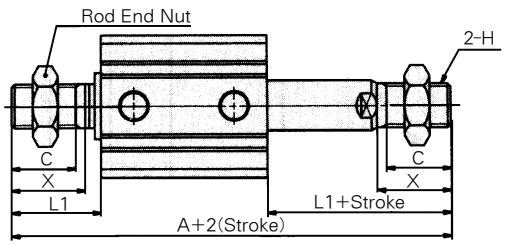

Rod End Male Thread (mm)

Bire size (mm)	A	C	H	L1	X
ø40	107	20.5	M14×1.5	28.5	23.5
ø50	117.5	26	M18×1.5	33.5	28.5
ø63	119	26	M18×1.5	33.5	28.5

Standard (mm)

Bire size (mm)	Stroke range (mm)	A	B	C	D	E	H	I	J	K1	K2	L	M	N	øO	P	Q	S	Th9	U	Z
ø40	5～75	64	50	13	16	52	M8×1.25	69	5	14	14	7	40	5.5	9Depth7	Rc(PT)1/8	14	66	$28^{0}_{-0.052}$	35	18
ø50	10～75	66.5	50.5	15	20	64	M10×1.5	86	7	18	17	8	50	6.5	11Depth8	Rc(PT)1/4	14	80	$35^{0}_{-0.062}$	41	22
ø63	10～75	68	52	15	20	77	M10×1.5	103	7	18	17	8	60	9	14Depth10.5	Rc(PT)1/4	15.5	93	$35^{0}_{-0.062}$	47.5	22

With Auto Switch : Single Acting/Single Rod/Spring Return Type

Bore Size : ø20

For the Dimension of
"A" type (Both End Tapped)
Please refer to Page A-196

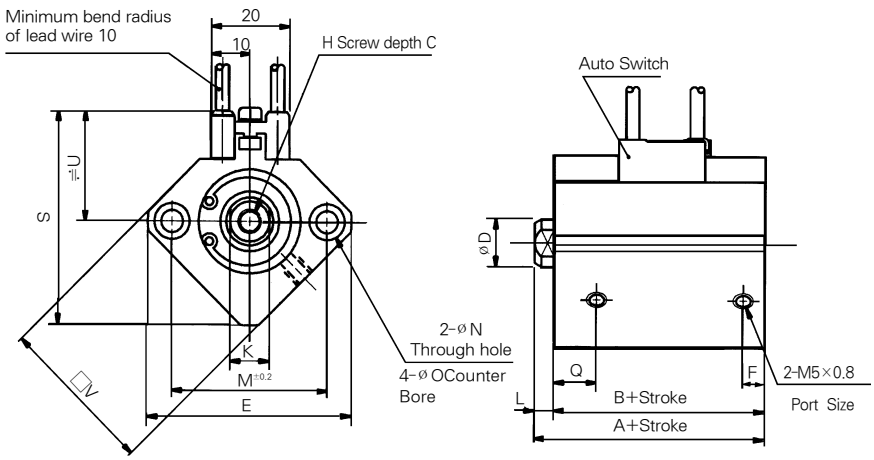

Rear Boss Mount

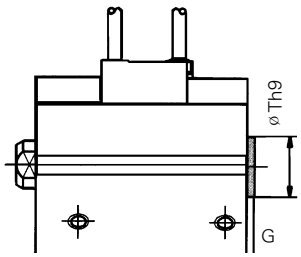

Rear Boss Mount (mm)

Bore size (mm)	G	Th9
ø20	2	$13^{0}_{0.043}$

Rod End Male Thread

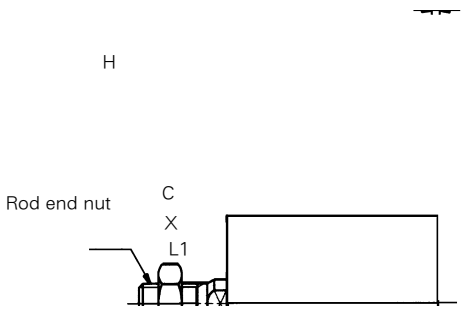

Rod End Male Thread (mm)

Bore size (mm)	C	X	H	L1
				5st
ø20	12	14	M8×1.25	18.5

Standard (mm)

Bore size (mm)	A		B		C	D	E	F	H	K	L	M	N	øO	S	U	V
	5st	10st	5st	10st													
ø20	41	46	36.5	41.5	7	10	47	5.5	M5×0.8	8	4.5	36	5.5	9 Depth 7	48	24.5	36

With Auto Switch : Single Acting/Single Rod /Spring Return Type : Dimensions

Bore Size : ø 32～ø 50

For the Dimension of "A" type (Both End Tapped) Please refer to Page A-196

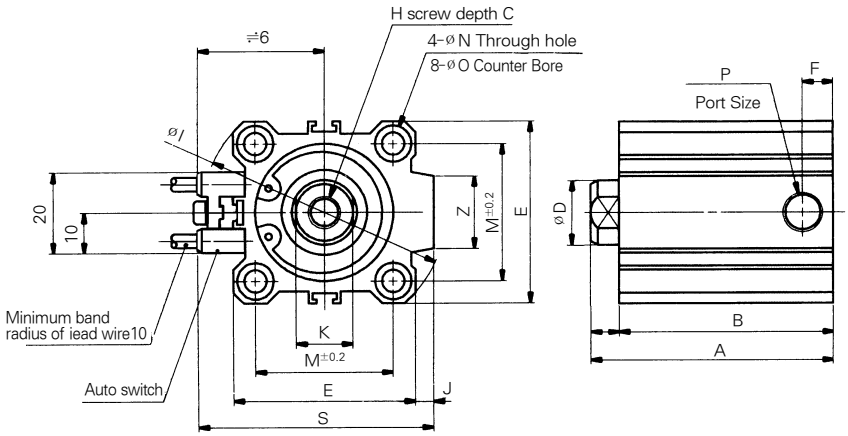

Rear Boss Mount

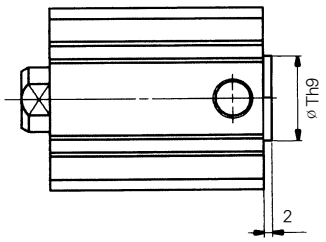

Rear Boss Mount (mm)

Bore size (mm)	Th9
ø 32	$21^{00}_{-0.052}$
ø 40	$28^{00}_{-0.052}$
ø 50	$35^{00}_{-0.062}$

Rod End Male Thread

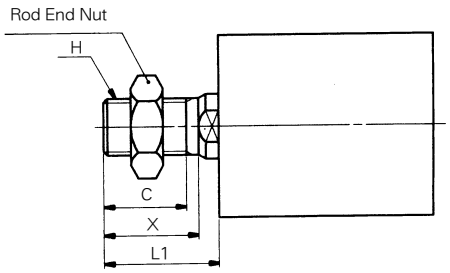

Rod End Male Thread (mm)

Bore size (mm)	C	X	H	L1
ø 32	20.5	23.5	M14×1.5	28.5
ø 40	20.5	23.5	M14×1.5	28.5
ø 50	26	28.5	M18×1.5	33.5

Standard (mm)

Bore size (mm)	A		B		C	D	E	F	H	I	J	K	L	M	N	øO	P	S	U	Z
	5st	10st	5st	10st																
ø 32	45	50	38	43	13	16	45	7.5	M8×1.25	60	4.5	14	7	34	5.5	9 Depth7	Rc(PT) 1/8	58.5	31.5	18
ø 40	51.5	56.6	44.5	49.5	13	16	52	8	M8×1.25	69	5	14	7	40	5.5	9 Depth7	Rc(PT) 1/8	66	35	18
ø 50	-	58.5	-	50.5	15	20	64	10.5	M10×1.5	86	7	17	8	50	6.6	11Depth8	Rc(PT) 1/4	80	41	22

With Auto Switch : Single Acting/Single Rod /Spring Extended Type : Dimensions

Bore Size : ø 20

For the Dimension of
"A" type (Both End Tapped)
Please refer to Page A-196

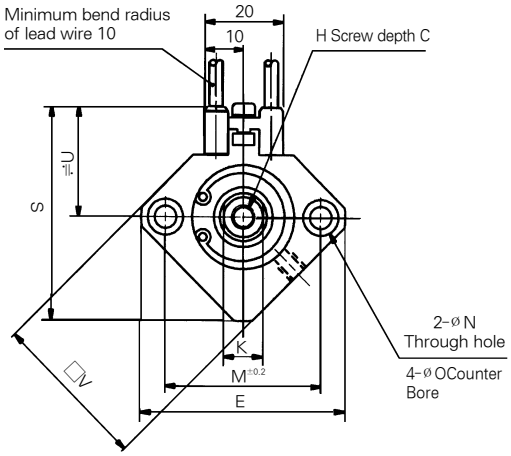

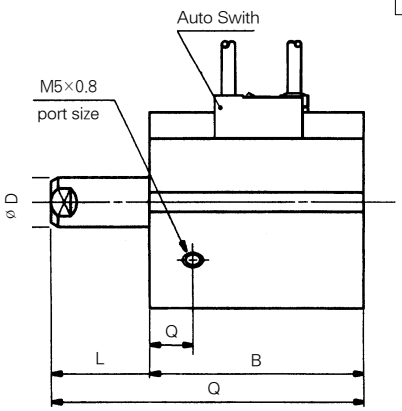

Rear Boss Mount

Bore size (mm)	G	Th9
ø 20	2	13 $^{0}_{-0.043}$

Rear Boss Mount

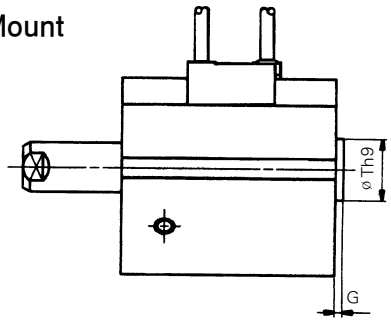

Rod End Male Thread

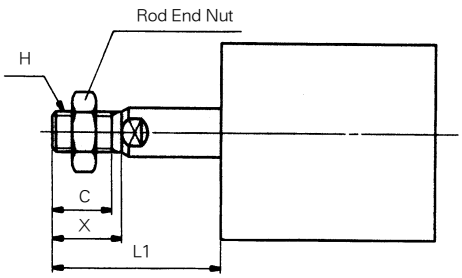

Rod End Male Thread

Bore size (mm)	C	X	H	L1	
				5st	10st
ø 20	12	14	M8×1.25	23.5	28.5

Standard

(mm)

Bore size (mm)	A		B		C	D	E	H	K	L		M	N	ø O	Q	S	U	V
	5st	10st	5st	10st						5st	10st							
ø 20	46	56	36.5	41.5	7	10	47	M5×0.8	8	9.5	14.5	36	5.5	9 Depth 7	10.5	48	24.5	36

With Auto Switch : Single Acting/Single Rod/Spring Extend Type : Dimensions

Bore Size : ø32~ø50

For the Dimension of "A" type (Both End Tapped) Please refer to Page A-196

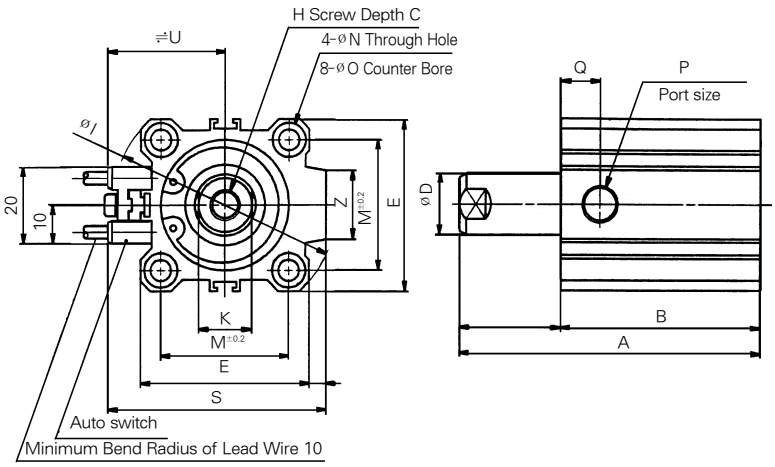

Rear Boss Mount

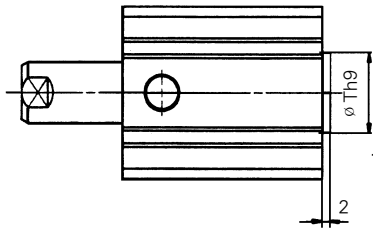

Rear Boss Mount (mm)

Bore size (mm)	Th9
ø32	21 $^{0}_{-0.052}$
ø40	28 $^{0}_{-0.052}$
ø50	35 $^{0}_{-0.052}$

Rod End Male Thread

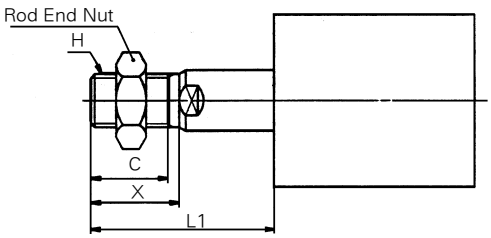

Rod End Male Thread (mm)

Bore size (mm)	C	X	H	L1		
				5st	10st	20st
ø32	20.5	23.5	M14×1.5	33.5	38.5	–
ø40	20.5	23.5	M14×1.5	33.5	38.5	–
ø50	26	28.5	M18×1.5	–	43.5	53.5

Standard Type (mm)

Bore size (mm)	A		B		C	D	E	H	I	J	K	L		M	N	O	P	Q	S	U	V
	5st	10st	5st	10st								5st	10st								
ø32	50	60	38	43	13	16	45	M8×1.25	60	4.5	14	12	17	34	5.5	9 Depth 7	Rc(PT) 1/8	10.5	58.5	31.5	18
ø40	56.5	66.5	44.5	49.5	13	16	52	M8×1.25	69	5	14	12	17	40	5.5	9 Depth 7	Rc(PT) 1/8	11	66	35	18
ø50	–	68.5	–	50.5	15	20	64	M10×1.5	86	7	17	–	18	50	6.6	11 Depth 8	Rc(PT) 1/4	10.5	80	41	22

Both Ends Tapped

〈"A" Type〉

(mm)

Bore Size mm	O	Depth1	Depth2	R1	R2
ø12	M4×0.7	3.5(-)	3.5	10.5(-)	10.5
ø16	M4×0.7	3.5(-)	3.5	10.5(-)	10.5
ø20	M6×1.0	7(15)	7	17(25)	17
ø25	M6×1.0	7(15)	7	17(25)	17
ø32	M6×1.0	7(7)	7	17(17)	17
ø40	M6×1.0	7(7)	7	17(17)	17
ø50	M8×1.25	8(8)	8	22(22)	22
ø63	M10×1.5	10.5(10.5)	10.5	28.5(28.5)	28.5
ø80	M12×1.75	10.5(10.5)	10.5	35.5(35.5)	35.5
ø100	M12×1.75	13.5(13.5)	13.5	35.5(35.5)	35.5

※ ( ) : Non - Rotating Type

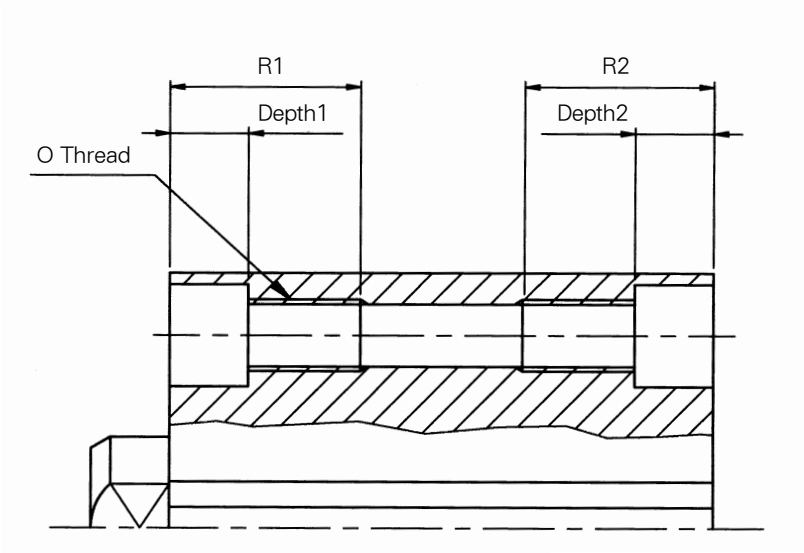

Series ADQCP

Compact Cylinder for Intense-Magnetism Resistant

Bore Size (mm) : ø50, ø63

- FOR WELDING MACHINE/INTENSE MAGNETIC FIELD
- SAVE SPACING COMPACT DESIGN
- MANUFACTURING CERTIFIED TO ISO 9001/9002 STANDARDS

Symbol

Double Acting / Single Rod Type

How to Order

ADQCP 50 - 40 D - Y - W□ Z S

1 2 3 4 5 6 7 8

1 Series : Compact Cylinder for Intense-Magnetism Resistant

2 Bore Size (mm)
50 : ø50
63 : ø63

3 Standard Stroke(mm)
50 : 25, 30, 35, 40, 45, 50
63 : 25, 30, 35, 40, 45, 50

4 Double Acting : D

5 Rod End Options
Blank : Without attachment
Y : With double knuckle joint pin, flat washer, split pin

6 Reed Auto Switch
Blank : Without auto switch
W6 : 120VAC, OFF lighting
W7 : 24VDC, 120VDC, ON lighting
For Details, Please refer to Page A-203

7 Switch Lead Wire Length
L : 3m
Z : 5m

8 Number of Switches
Blank : 2 pcs.
S : 1 pc.

PART No. of Auto Switch Fittings

Switch	Part No.	
	ø50	ø63
W6, W7	BQP1T-050	

Cylinder Specifications

Type	ADQCP
Fluid	Air
Bore Size (mm)	ø50 , ø63
Max. Operating Pressure	9.9kgf/cm² {1.0 MPa}
Proof Pressure	15kgf/cm² {1.5 MPa}
Ambient Fliuid Temperture	5~60°c
Thread end Tolerance	KS Grade 2
Stroke Tolerance	+1.0

Minimum stroke for mounting intense-magnetism resistant switch. (mm)

Switch Mounting Position / Cylinder Type Bore	With 1 Switch	With 2 Switches		
		Same surface	Different Surfaces	Different Surfaces
	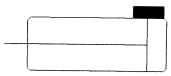	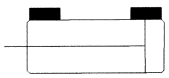	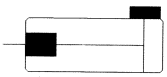	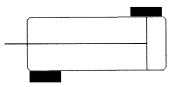
ADQCP50,63	25	30	25	

Auto Switch Mounting Position (Stroke End) (mm)

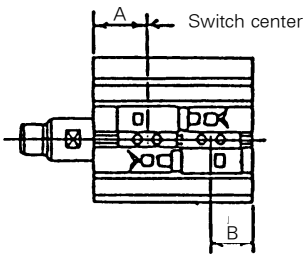

Type \ Bore	ø50		ø63	
	A	B	A	B
ADQCP	33.5	22.5	37.5	24

Auto Switch Mounting

Using the special nut shown below, fix the auto switch in the specified position with two screws.
(The proper tightening torque of set screws is 6 kgf · cm.)

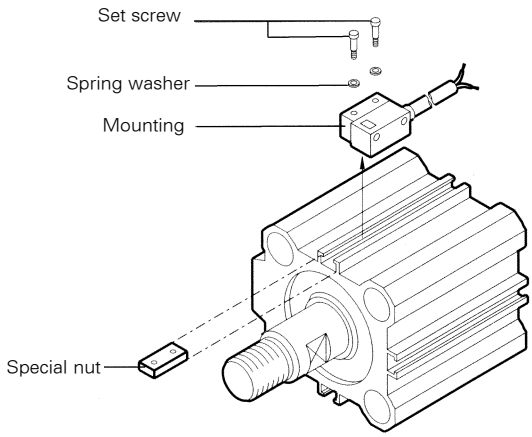

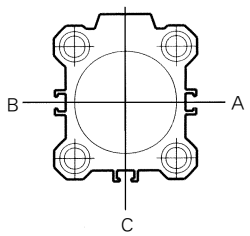

The auto switch can be mounted in three positions-A, B and C-shown above.

Dimensions

ø50, ø63

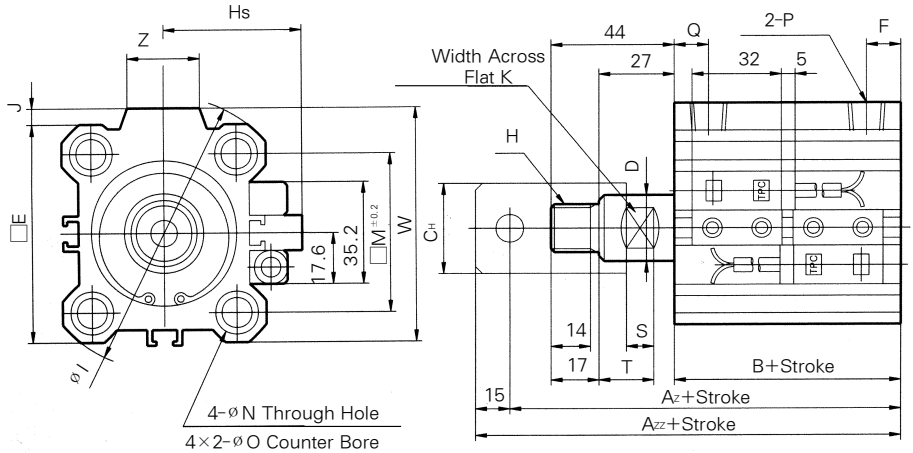

Double Knuckle Joint

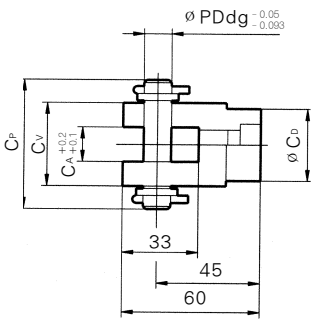

(Unit : mm)

Bore size (mm)	A	A_Z	A_{ZZ}	B	øD	E	F	H	øI	J	K	M	øN	øO	P	Q	W	Z	T	S	Hs	Cp	Cv	C_A	PD	C_H	C_D
ø50	99.5	117.5	132.5	55.5	20	64	10.5	M16×1.5	86	7	17	50	6.6	11Depth 8	NPT1/4	10.5	71	22	20	10	49	55	36	16	12	30	30
ø63	105	123	138	61	20	77	10.5	M16×1.5	103	7	17	60	9	14Depth10.5	NPT1/4	15	84	22	20	10	55.5	55	36	16	12	30	30

Dual Stroke Cylinder/Double Rod Type

AQB Bore – Stroke A + Stroke B D(C)(M)-XC10

Two cylinder are constructed as one cylinder in a back-to back conifiguration allowing the cylinder stroke to be controlled in the three steps.

Symbol
function

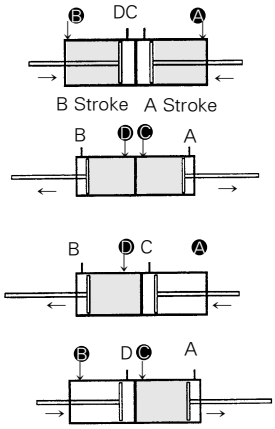

When air pressure is supplied to ports Ⓐ and Ⓑ, both A and B stroke retract.

When air pressure is supplied to ports Ⓓ and Ⓒ, A and Ⓑ strokes extend.

When air pressure is supplied to ports Ⓐ and Ⓓ, B stroke extends and A retracts strokes.

When air pressure is supplied to ports Ⓑ and Ⓒ, A stroke extends and B stroke retracts.

Specifications

Type	Non-Lub
Bore(mm)	ø 12～ø 100
Action	Double acting
Fluid	Air
Mounting style	Through hole

Dimensions

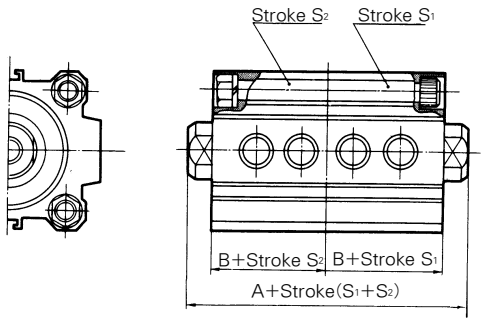

(mm)

Bore (mm)	Stroke adjustable range	A		B	
		50 stroke or less	75, 100	50 stroke or less	75, 100
ø 12	5~30	41(63)	-	17(28)	-
ø 16		44(68)	-	18.5(30.5)	-
ø 20	5~50	48(72)	-	19.5(31.5)	-
ø 25		55(75)	-	22.5(32.5)	-
ø 32	5~100	60(80)	80(80)	23(33)	33(33)
ø 40		73(93)	93(93)	29.5(39.5)	39.5(39.5)
ø 50	10~100	77(97)	97(97)	30.5(40.5)	40.5(40.5)
ø 63		88(108)	108(108)	36(46)	46(46)
ø 80		107(127)	127(127)	43.5(53.5)	53.5(53.5)
ø 100		130(150)	150(150)	53(63)	63(63)

※( ) : With auto switch

Dual Stroke Cylinder/Single Rod Type

AQB Bore – Stroke A + Stroke B-A D(C)(M)-XC11

Two cylinders are constructed in serial as one cylinder. It is possible control the cylinder stroke in two steps to obtain double the cylinder output force.

Symbol
function

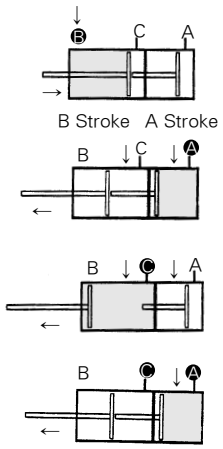

When air pressure is supplied to the Ⓑ port, both A and B stroke retract.

When air pressure is supplied to the Ⓐ port, the rod extends by the A stroke length.

When air pressure is supplied to the Ⓒ port, the rod operates a further length equal, to B+C stroke.

When air pressure is supplied to both ports Ⓐ and Ⓒ, double output force is obtainable in the range of the A stroke length.

Specifications

Type	Non-Lub
Bore(mm)	ø 20～ø 100
Action	Double acting
Fluid	Air
Mounting style	Through hole

Construction · Major Dimensions

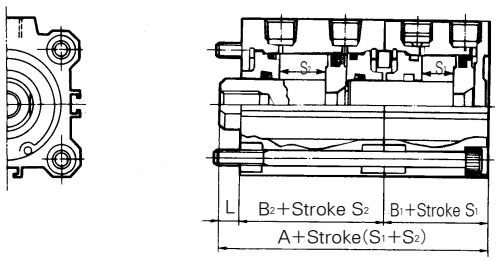

(mm)

Bore (mm)	A	B1	B2	L
ø 20	50(74)	19.5(31.5)	26(38)	4.5
ø 25	56.5(76.5)	22.5(32.5)	29(39)	5
ø 32	60.5(80.5)	23(33)	30.5(40.5)	7
ø 40	76.5(96.5)	29.5(39.5)	40(50)	7
ø 50	79(99)	30.5(40.5)	40.5(50.5)	8
ø 63	88(106)	36(46)	42(52)	8
ø 80	104.5(124.5)	43.5(53.5)	51(61)	10
ø 100	125.5(145.5)	53(63)	60.5(70.5)	12

※ ( ) : With auto switch

Adjustable Stroke Cylinder/Extension Adjustable Type

AQB Bore — Stroke D- XC8

The stroke at extension of the cylinder can be adjusted by the stopper in the head side from full stroke 0~10mm(0.39 inch).

Symbol

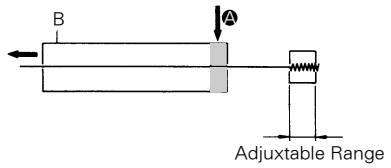

Specifications

Type	Non-Lub
Bore	ø16~ø100
Action	Double Acting
Fluid	Air
Stroke Adjustment System	Adjusting Bolt
Stroke Adjustment Range	10mm(0.39inch)
Mounting Style	Through Hole

Construction · Major Dimensions

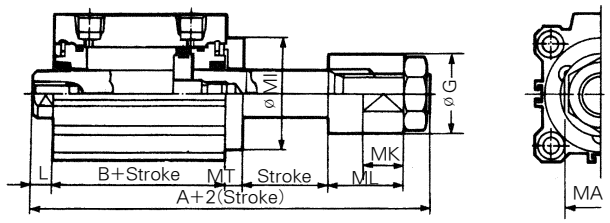

(mm)

Bore(mm)	A	B	L	MT	MI	MA	MK	øG	ML	Standard Stroke Range
ø16	58.5	26	3.5	5	□28	11	7	14	19	30
ø20	67.5	26	4.5	8	□36	17	10	20	22.5	50
ø25	71	29	5	8	□40	17	10	20	22.5	
ø32	78.5	30.5	7	6	ø38	24	14	27	26	
ø40	88	40	7	6	ø46	24	14	27	26	
ø50	100.5	40.5	8	8	ø57	30	16	35	30	
ø63	102	42	8	10	ø68	30	16	35	30	
ø80	125	51	10	12	ø90	41	20	48	38	
ø100	138.5	60.5	12	14	ø110	41	20	48	38	

※ Order dimensions are the same as for standard type.

Adjustable Stroke Cylinder/Retraction Adjustable Type

AQ Mounting Bore — Stroke — D(M)-XC9

The stroke at retraction of the cylinder can be adjusted from 0~10mm(0.39 inch) by the adjusting bolt.

Symbol

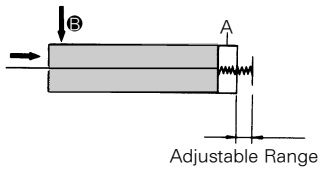

Specifications

Type	Non-Lub
Bore size(inch)	ø20~ø100
Action	Double Acting
Fluid	Air
Stroke Adjustment System	Adjusting Bolt
Stroke Adjustment Range	10mm(0.39 inch)
Mounting Style	Through Hole(standard), Both ends Tapped

Dimensions

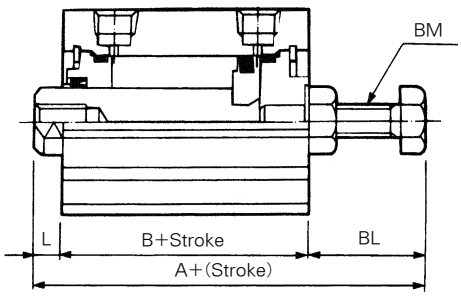

(mm)

Bore(mm)	A	B	L	BL	BM	Standard Stroke Range
ø20	61(73)	26(38)	4.5	30.5	M8×1.25	5~50
ø25	63.5(73.5)	29(39)	5	29.5	M8×1.25	
ø32	65.5(75.5)	30.5(40.5)	7	28	M8×1.25	
ø40	84(94)	40(50)	7	37	M8×1.5	
ø50	84.5(94.5)	40.5(50.5)	8	36	M8×1.25	10~50
ø63	88.5(98.5)	42(52)	8	38.5	M8×1.5	
ø80	109.5(119.5)	51(61)	10	48.5	M8×1.5	
ø100	125(135)	60.5(70.5)	12	52.5	M8×1.5	

※ Order dimensions are the same as for standard type.
※ ( ) : With auto switch

Auto Switch Specifications

Auto Switch Model	W4	
Application	Relay, Sequence Control	
Voltage	DC24V	AC110V
Range of Load Current	5~40mA	5~20mA
Protection Circuit for Contact Breaker Point	None	
Internal Voltage Drop	2.4V or less	
Indicator Lamp	ON:Red light emitting diode	

- Leakage current - None
- Response time - 1.2 ms
- Lead Wire - Oil proof vinyl. ø3.4, 0.2mm², 2 wire(red, black), 0.5 m
- Impact Resistance - 30G
- Insulation Resistance - 50MΩ or more under the test voltage 500VDC (Between case and cable)
- Withstand Voltage - 1500VAC 1min(between case and cable)
- Ambient Temperature - 5~60°F(5~60℃)
- Protection Structure - IEC spec IP67, Water-proof(JISCO920), oil-proof.

※ If 3m lead wire is required, L is put at end of model numbers.
(Example) W4L

Auto Switch/Internal Circuit

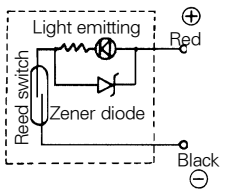

Auto Switch Dimensions

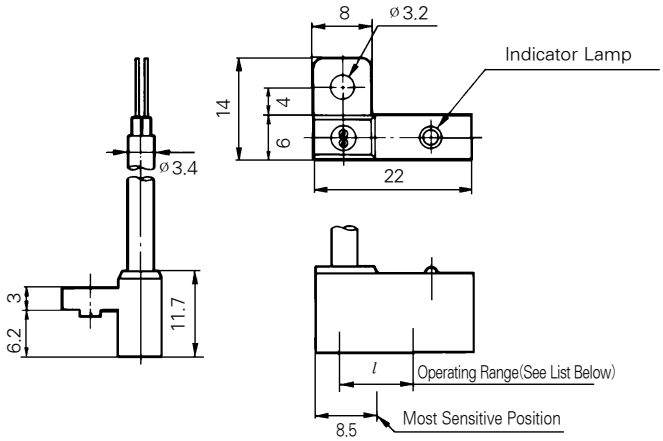

Operating Range (l Dimensions)

Series	Bore Size (mm)									
	ø12	ø16	ø20	ø25	ø32	ø40	ø50	ø63	ø80	ø100
ADQ	10	8	9	9	11	11	10	12	12	13

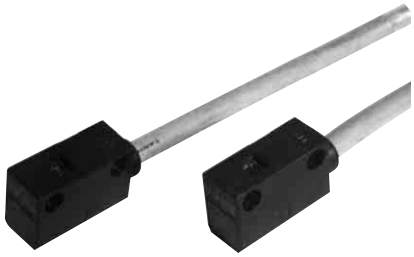

Auto Switch Specifications

Auto Switch model	W6(L)(Z)	W7(L)(Z)	
Operating Voltage	AC120V	DC24V	AC100V
Operating Current Range	20mA	5~40mA	5~20mA
Internal Voltage Drop	0V	Max 2.4V	
Operating Time	1.2m/sec		
Impact Resistance	30G		
Protection Structure	IEC STandard IP67		
Pilot Lamp	OFF Lighting(Red LED)	ON Lighting(red LED)	
Leakage Current	MAX. 1.8mA	0	
Ambient Temperature Range	-10~60℃		
Insulation Resistance	50MΩ/500V DC		
Application	Relay, Sequence Controller		

Auto Switch Dimensions

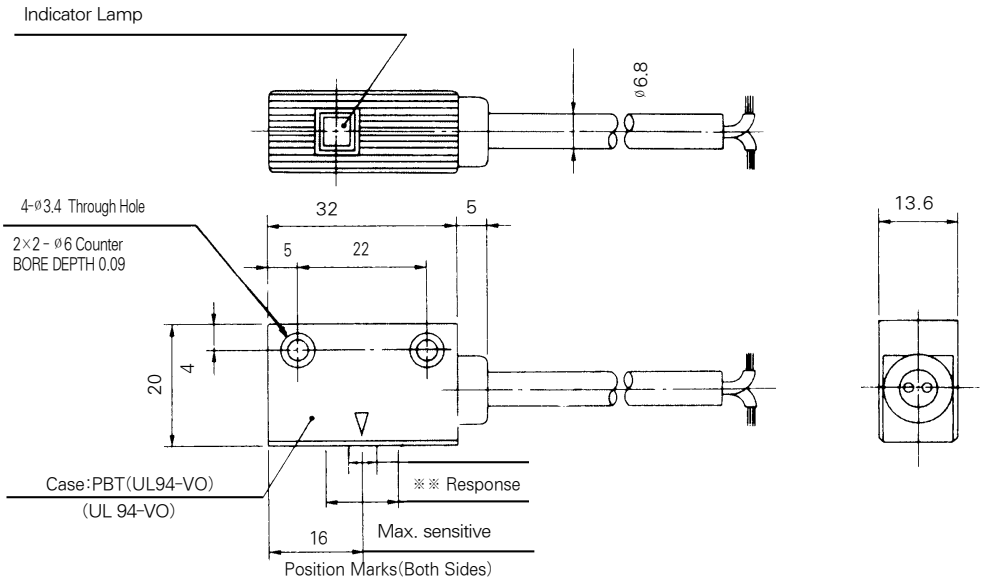

Operation Range(l Dimension)

Series	Bore Size (mm)	
	ø 50	ø 63
ADQCP	8	8
AMD□P	9	9
AJCP	8	8

Series AG

Compat Guide Cylinder

Bore Size(mm) : ø12, ø16, ø20, ø25, ø32, ø40, ø50, ø63, ø80, ø100

- COMPACT SLIM BODY GUIDE CYLINDER
- 10 BORE SIZES
- MULTIPLE MOUNTING OPTIONS
- FLUSH MOUNTING-AUTO SWITCH
- AVAILABLE WITH BALL BEARING BUSHINGS
- LOW BREAKAWAY
- DESIGNED FOR NON-LUBE APPLICATIONS
- HI LOAD BEARING CHARACTERISTICS

How to Order

AG M 20 — 75 — ○ — W4 □

1 2 3 4 5 6 7

1 Compact Guide Cylinder

2 Type of Bearing
M : Slide bearing(Suitable for Stopper)
L : Ball bush bearing (Suitable for Lifting/ Pushing)

3 Bore size
12 : ø12mm
16 : ø16mm
20 : ø20mm
25 : ø25mm
32 : ø32mm
40 : ø40mm
50 : ø50mm
63 : ø63mm
80 : ø80mm
100 : ø100mm

4 Cylinder Stroke(mm)
Refer to Model/Standard Stroke Table.

5 Option
Blank : Standard
XC16 : Copper-Free

6 Type of Auto-switch
Blank : Without Auto -Switch (Cylinder with built-in magnet)
Reed switch
W4 : W4(2 wire DC24V, AC100V) (ø32 ~ ø100)
W13 : W13(2wire, DC24V, AC110V) (ø12 ~ ø25)
Solid State Switch
W1H : W1H(3wire system, DC24V) (ø12 ~ ø25)
※ The standard, lead wire length is 0.5m "L" is added for 3m long lead wire (applicable to all models)
(Example) W4L

7 Auto Switch
Blank : 2 Pcs.
S : 1 Pc.

Model/Standard Stroke Table

Bore Size(mm)	Standard Stroke(mm)
ø12, ø16	10, 20, 30, 40, 50, 75, 100
ø12, ø25	20, 30, 40, 50, 100
ø32, ø40, ø50, ø63, ø80, ø100	25, 50, 75, 100, 125, 150

• Intermediate stroke
As to Intermediate stroke(5, 10, 15, 20, 30, 35...), Spacer of 5, 10, 15, 20mm width will be used.
(Example)AGM50-10 is Produced by installing 15mm spacer in AGM 50-25.
Consult factory when the desired stroke is greater then the standard stroke.

Specifications

Operation	Double Acting
Fluid	Air
Proof pressure	15.3kgf/cm²{1.5MPa}
Max. operating pressure	9.9kgf/cm²{1.0MPa}
Min. operating pressure	1.2kgf/cm²{0.12MPa}
Ambient and fluid temperature	-10～+60℃
Piston speed	50～500mm/s
Cushion	Rubber Cushion at Both Sides
Lubrication	Non-Lubrication
Stroke tolerance	$^{+1.5}_{0}$ mm

ACP
AX
AS
AM
AM2
AL ALX
ARD
AJ
AQ
AG
AGX GX
ADM
ADR
AMR
AST
NLCD

- Space saving cylinder. Provides Non-Rotating support for side loads. Suitable for conveyor lines where stopping and lifting are required.

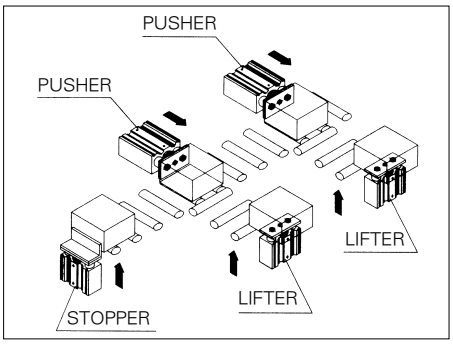

- 2 kinds of bearings

Slide Bearing -
Strength against side load is more then 2 times that of conventional stopper cylinders.

Ball Bushing Bearing -
Smooth operation suitable for pushing, lifting and applications where high precision is required.

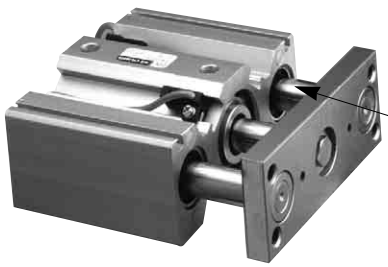

- High Non - Rotating Load Capability

Bore size	Non-Rotating Accuracy θ AGM	Non-Rotating Accuracy θ AGL
ø12	±0.07°	±0.10°
ø16		
ø20	±0.06°	±0.09°
ø25		
ø32	±0.06°	±0.08°
ø40		
ø50	±0.05°	±0.06°
ø63		
ø80	±0.04°	±0.05°
ø100		

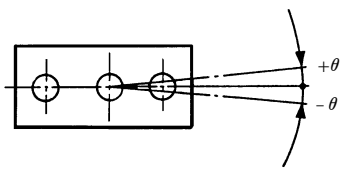

MOUNTING FUEXIBILITY

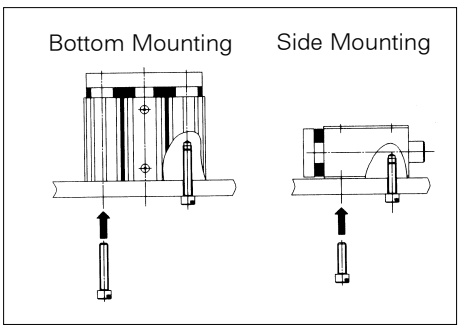

ø12~ø25 / AGM · AGL

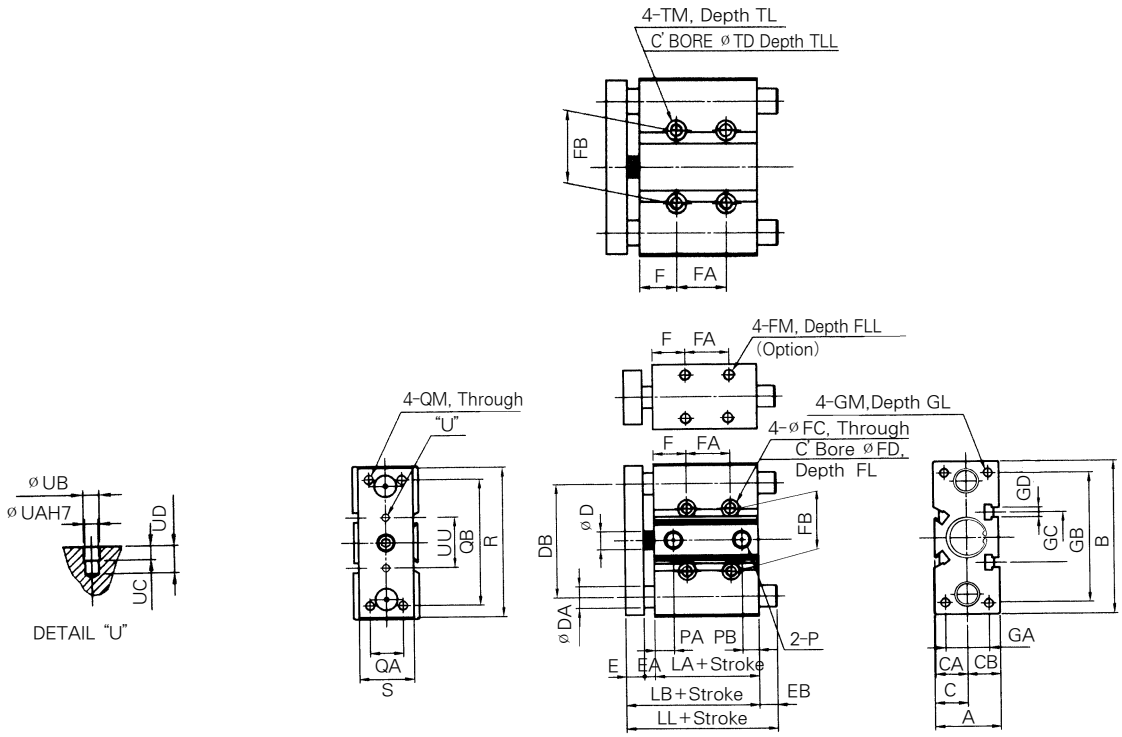

※ As to intermediate stroke. spacer will be used.

AGM · AGL Common Dimensions

(Units : mm)

Bore Size (mm)	A	B	C	CA	CB	D	DA AGM	DA AGL	DB	E	EA	EB AGM 30st less	EB AGM 30~50st Above	EB AGM 50st less	EB AGL 10st	EB AGL 20st	EB AGL 30st	EB AGL 40·50st	EB AGL 50st Above	F	FA 30ST Less	FA 30ST Above	FB	FC	FD	FL	FH	FM	FLL	GA	GB	GC	GD	GM	GL	LA	LB
ø12	26	60	13	12.5	13	6	8	6	46	8	5	0	5	34	3	13	13	23	28	7	20	40	25	4.3	8	13.5	18	M5×0.8	12	18	50	23	M3	M4×0.7	10	29	42
ø16	30	67	15	14.5	15	8	10	8	50	8	5	0	5	34	5	20	20	30	35	7	24	44	27	4.3	8	12.5	22	M5×0.8	12	22	56	24	M3	M5×0.8	12	33	46
ø20	36	85	18	17.5	18	10	12	10	58	10	6	3	5	47	-	12	25	35	42	18	24	44	31	5.5	9.5	13.5	24	M5×0.8	13	24	72	28	M5	M5×0.8	13	37	53
ø25	42	95	21	20.5	21	12	16	13	68	10	6	3	5	47	-	18	18	37	48	18	24	44	35	5.5	9.5	14.5	30	M6×1.0	15	30	82	34	M5	M6×1.0	15	37.5	53.5

Bore Size (mm)	LL AGM 30st less	LL AGM 40st Above	LL AGM 50st less	LL AGL 10st	LL AGL 20st	LL AGL 30st	LL AGL 40·50st	LL AGL 50st	P	PA	PB	QA	QB	QM	R	S	TM	TL	TD	TLL	UU	UA	UB	UC	UD
ø12	42	47	76	45	55	55	65	70	M5×0.8	11	8.5	14	48	M4×0.7	58	22	M5×0.8	10	6	4.3	23	3	3.5	3	6
ø16	46	54	80	51	66	66	76	81	M5×0.8	11	8	16	54	M5×0.8	65	25	M5×0.8	10	6	4.3	24	3	3.5	3	6
ø20	56	58	100	-	65	78	88	95	Rc1/8	10.5	9	18	70	M5×0.8	83	30	M6×1.0	12	7	8	28	3	3.5	3	6
ø25	56.5	58.5	100.5	-	71.5	71.5	90.5	101.5	Rc1/8	11.5	9.5	26	78	M6×1.0	93	38	M6×1.0	12	7	8	34	4	4.5	3	6

Grooves(ø12, ø16, ø20, ø25)

These grooves(W) can be used to firmly fix the terminal boards.,etc to the main body of the cylinder.

(Unit : mm)

Model	A	B	C	D	E	F	Applicable Bolt
AG□12	3.5	6	2	4.3	1.5	23	M3
AG□16	3.7	6.2	2	4.6	1.5	2.4	M3
AG□20	5.5	8.5	3.5	7.8	3	2.8	M5
AG□25	5.5	8.5	3.5	8	3	34	M5

AG▨ 12~25

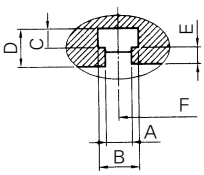

DETAIL"W"

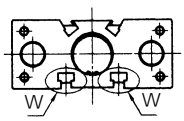

AG●12
AG●16
AG●20
AG●25

ø32～ø63 / AGM · AGL

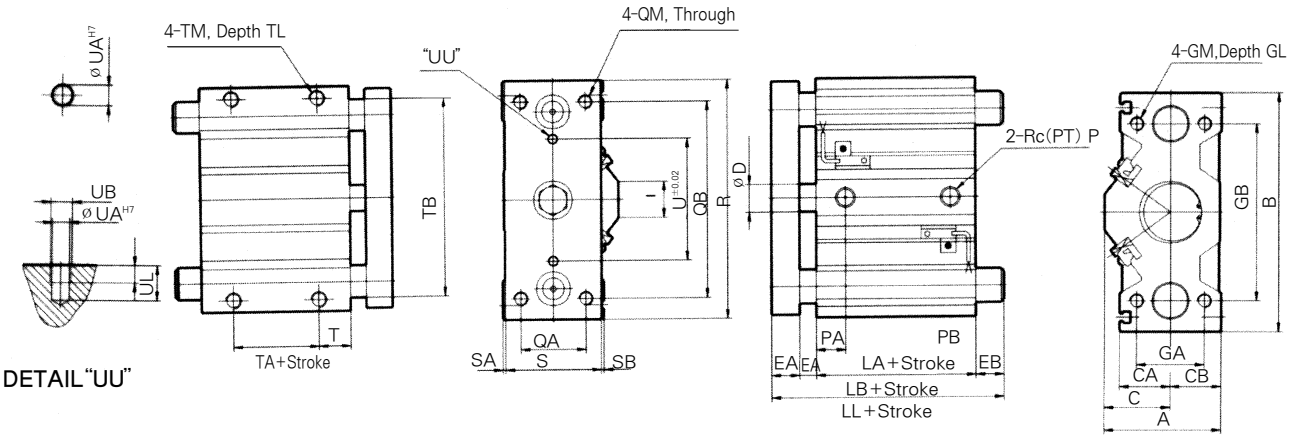

※ As to intermediate stroke, spacer will be used.

AGM · AGL Common Dimensions

(Unit : mm)

Bore Size (mm)	Standard Stroke (mm)	A	B	C	CA	CB	D	DA AGM	DA AGL	E	EA	EB AGM 25ST	EB AGM 50ST	EB AGM 75ST	EB AGM 100ST	EB AGM 125ST	EB AGM 150ST	EB AGL 25ST	EB AGL 50ST	EB AGL 75ST	EB AGL 100ST	EB AGL 125ST	EB AGL 150ST	GA	GB	GL	GM	I	LA	LB
ø32	25, 50 75, 100 125, 150	53	114	27	25	26	16	20	16	12	10	23.2	41.2	46.2	46.2	51.2	51.2	4.4	41.4	46.4	46.4	66.4	66.4	38	80	20	M8×1.25	22	37.5	59.5
ø40		57	124	31	25	26	16	20	16	12	10	16.7	34.7	39.7	39.7	44.7	44.7	0	34.9	39.9	39.9	59.9	59.9	38	90	20	M8×1.25	22	44	66
ø50		69	140	39	29	30	20	25	20	16	12	27.7	39.7	49.7	49.7	54.7	54.7	2.9	44.9	49.9	49.9	69.9	69.9	44	100	25	M10×1.5	22	44	72
ø63		82	150	45.5	29	36.5	20	25	20	16	12	22.7	34.7	44.7	44.7	49.7	49.7	0	39.9	44.9	44.9	64.9	64.9	44	110	25	M10×1.5	31	49	77

Bore Size (mm)	LL AGM 25ST	LL AGM 50ST	LL AGM 75ST	LL AGM 100ST	LL AGM 125ST	LL AGM 150ST	LL AGL 25ST	LL AGL 50ST	LL AGL 75ST	LL AGL 100ST	LL AGL 125ST	LL AGL 150ST	P	PA	PB	QA	QB	QM	R	S	SA	SB	T	TA	TB	TL	TM	U	UA	UB	UC	UL
ø32	82.7	100.7	105.7	105.7	110.7	63.9	63.9	100.9	105.9	105.9	125.9	125.9	1/8	12.5	9	30	96	M8×1.25	112	48	2	1	16	5	100	11	M8×1.25	42	4	4.5	3	6
ø40	82.7	100.7	105.7	105.7	110.7	110.7	63.9	100.9	105.9	105.9	125.9	125.9	1/8	14	10.5	30	106	M8×1.25	122	48	2	1	17	10	110	11	M8×1.25	50	4	4.5	3	6
ø50	99.7	111.7	121.7	121.7	126.7	126.7	74.9	116.9	121.9	121.9	141.9	141.9	1/4	14	11	40	120	M10×1.5	138	56	2	1	17	10	124	12.5	M10×1.5	56	5	6	4	8
ø63	99.7	111.7	121.7	121.7	126.7	126.7	74.9	116.9	121.9	121.9	141.9	141.9	1/4	16.5	13.5	50	130	M10×1.5	148	69	2	0	19	10	132	15	M10×1.5	66	5	6	4	8

Grooves (ø32, ø40, ø50, ø63, ø80, ø100)

These grooves can be used to firmly fix the bands of lead wires of the auto switch., and also terminal boards., etc, to the main body of the cylinder.

(Unit : mm)

Model	A
AG□32	8
AG□40	8
AG□50	8
AG□63	8
AG□80	10
AG□100	10

AG■32~63

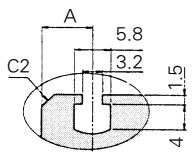

DETAIL"W"

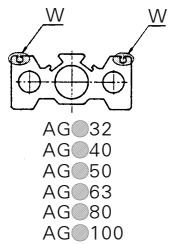

ø80～ø100 / AGM · AGL

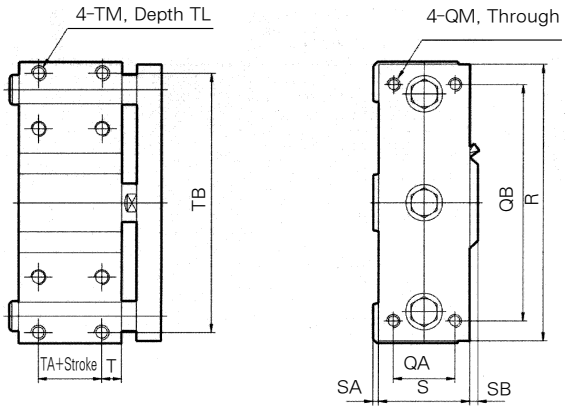

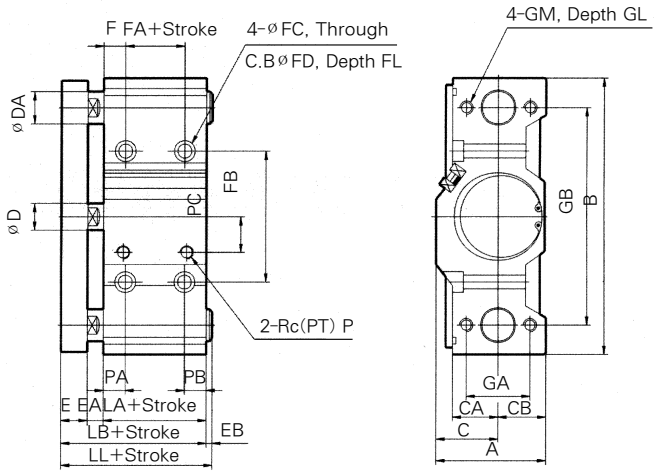

※ As to intermediate stroke, spacer will be used.

AGM · AGL Common Dimensions

(Unit : mm)

Bore Size (mm)	Standard Stroke (mm)	A	B	C	CA	CB	D	DA		E	EA	EB						F	FA	FB	FC	FD	FL	GA	GB	GL
								AGM	AGL			AGM				AGL										
												25ST	50ST	75,100ST	125,150ST	25,50ST	75,100,125,150ST									
ø80	25,50,75	96.5	204	50	38.5	46.5	25	30	25	22	18	23.3	25.3	53.3	58.3	8.5	72.5	20.5	15.5	100	11	17.5	11	56	155	30
ø100	100,125,150	114.5	238	58	41	56.5	30	36	30	25	20	18.8	23.8	48.8	53.8	4.0	73.0	20.5	25	120	13	20	13	62	184	35

Bore Size (mm)	GM	LA	LB	LL						P	PA	PB	PC	QA	QB	QM	R	S	SA	SB	T	TA	TB	TL	TM
				AGM				AGL																	
				25ST	50ST	75,100ST	125,150ST	25,50ST	75,100,125,150ST																
ø80	M12×1.75	56.5	96.5	119.8	121.8	149.8	154.8	105	169	3/8	19	15.2	28	60	174	M12×1.75	198	80	6.5	10	20.5	15.5	182	18	M12×1.75
ø100	M14×2	66	111	129.8	134.8	159.8	164.8	115	184	3/8	22.5	18.8	35	64	200	M14×2	231	95	9	10.5	20.5	25	211	21	M14×2

Auto Switch Specifications

Auto Switch Model	W4	
Application	Relay, Sequence Control	
Voltage	DC24V	AC110V
Range of Load Current	5~40mA	5~20mA
Protection Circuit for Contact Breaker Point	None	
Internal Voltage Drop	2.4V or less	
Indicator Lamp	ON:Red light emitting diode	

- Leakage current - None
- Response time - 1.2 ms
- Lead Wire - Oil proof vinyl. ø3.4, 0.2mm², 2 wire(red, black), 0.5 m
- Impact Resistance - 30G
- Insulation Resistance - 50MΩ or more under the test voltage 500VDC (Between case and cable)
- Breakdown Voltage - 1500VAC 1min(between case and cable)
- Ambient Temperature - 5~60℃
- Protection Structure - IEC spec IP67, Water-proof(JISC 0920), oil-proof.

※ If 3m lead wire is required, L is put at end of model numbers.
(Example) W4L

Auto Switch/Internal Circuit

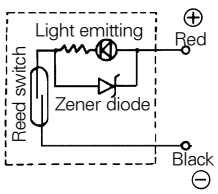

Auto Switch Dimensions

Units : mm

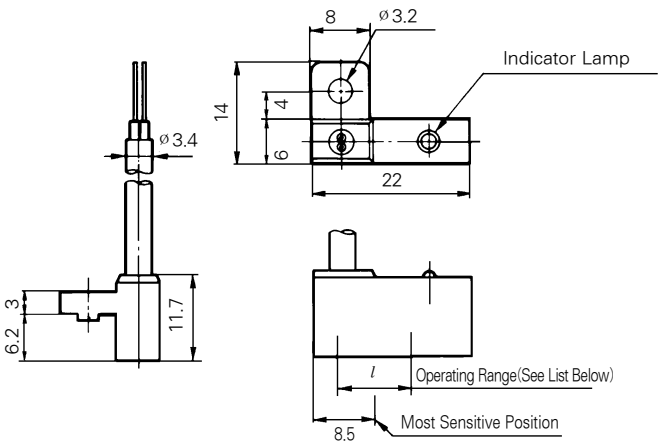

Operating Range (l Dimensions)

Units : mm

Series	Bore Size (mm)					
	ø32	ø40	ø50	ø63	ø80	ø100
AG	11	11	10	12	12	13

Solid State Switch Reed Switch

Auto Switch Specifications

Auto Switch No.	W1H□	W13□
Type of Auto Switch	Solid State Switch	Reed Switch
Application	Relay, Sequence Control	
Wiring Method	3 Wire System	2 Wire System
Power Source	DC10~28V	–
Load Voltage	DC28V Less	DC24V, AC100V
Current Consumption	100mA Less	DC24V : 5~40mA AC100V : 5~20mA
Internal Voltage Drop	100mA~0.5V Less	40mA~2.4V Less
Leakage Current	10μA Less(DC24V)	
Load Current	OFF: 5mA or Less ON : 35mA or Less	–

- Operating Time : Max. 1ms
- Lead Wire : Oil resistant vinyl cord. ø0.13, 0.2mm², 3 cores(red white, black), cores(red, black), 3m long
- Shock Resistance : 1000m/S² (102G)
- Insulation Resistance : 50MΩ or more under the test voltage 500V DC between case and cable.
- Withstand Voltage : 1000VAC for 1min.(between lead wire and the case)
- Ambient Temperature : -10~60℃
- Protection Structure : IEC Standard, watertight and oil resising structure

※ "L" is added to the end when the lead is 3m long.
(ex) W1□L

Auto Switch Internal Circuit

W1H□

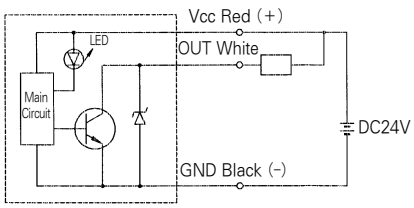

W13□

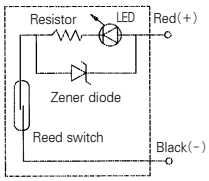

Auto Switch Dimensions

Units : mm

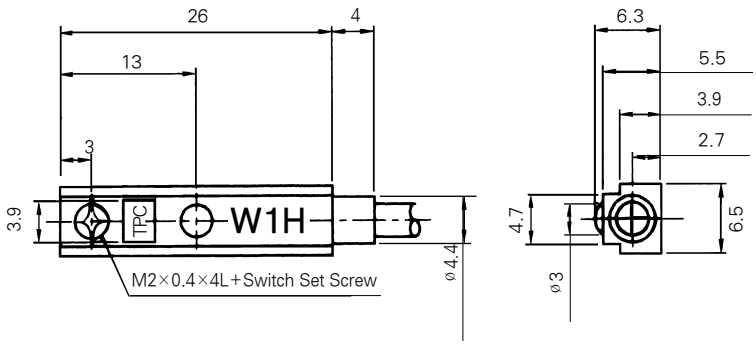

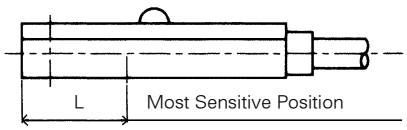

Units : mm

Stations	W1H□	W13□
L	10	15
Operating Range	4~10	4~10

Operating Conditions

Permissible Lateral Load (F)

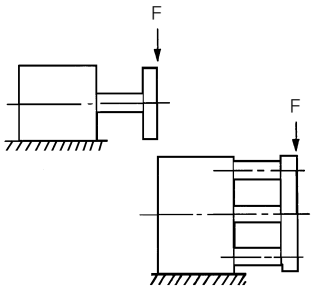

Units : N

Bore Size	Model	Stroke(mm)						
		10	20	30	40	50	75	100
ø12	AGM	26	20	18	18	17	29	25
	AGL	24	36	29	40	34	26	20
ø16	AGM	42	34	30	28	26	39	34
	AGL	36	54	43	58	51	37	30
ø20	AGM	–	53	47	45	42	88	76
	AGL	–	39	64	112	100	75	62
ø25	AGM	–	70	61	60	54	116	100
	AGL	–	61	50	134	120	98	81

1N≒0.102kgf

Units : N

Bore Size	Model	Stroke(mm)					
		25	50	75	100	125	150
ø32	AGM	196	167	137	108	91	76
	AGL	88	59	275	216	239	223
ø40	AGM	196	167	137	108	91	76
	AGL	88	59	275	216	239	293
ø50	AGM	294	255	215	176	151	130
	AGL	137	88	392	313	313	294
ø63	AGM	294	255	215	176	151	130
	AGL	137	88	392	313	313	294
ø80	AGM	353	304	255	206	-	-
	AGL	235	157	863	686	-	-
ø100	AGM	539	470	412	343	-	-
	AGL	470	313	1370	1070	-	-

1N≒0.102kgf

Permissible Rotary Torque of Plate(T)

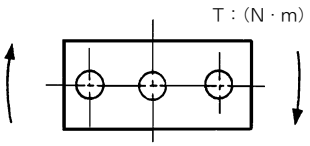

Units : N · m

Bore Size	Model	Stroke(mm)						
		10	20	30	40	50	75	100
ø12	AGM	0.42	0.34	0.28	0.31	0.27	0.48	0.42
	AGL	0.51	0.88	0.75	1.06	0.96	0.78	0.64
ø16	AGM	0.76	0.64	0.54	0.52	0.47	0.73	0.62
	AGL	0.82	1.43	1.23	1.64	1.52	1.23	1.06
ø20	AGM	–	1.14	1.02	0.98	0.80	1.90	1.65
	AGL	–	1.14	2.03	3.40	3.19	2.65	2.32
ø25	AGM	–	1.79	1.58	1.53	1.38	2.96	2.57
	AGL	–	2.10	1.86	4.74	4.46	4.01	3.53

1N · m≒10.2kgf.cm

Units : N · m

Bore Size	Model	Stroke(mm)					
		25	50	75	100	125	150
ø32	AGM	3.92	2.94	2.45	1.96	1.47	1.03
	AGL	1.96	0.98	5.88	4.41	5.76	5.12
ø40	AGM	4.41	3.43	2.94	2.45	1.84	1.35
	AGL	2.45	1.47	6.37	5.39	6.87	6.17
ø50	AGM	7.35	5.88	4.90	4.41	3.31	2.41
	AGL	3.43	2.45	10.78	8.33	9.63	8.63
ø63	AGM	7.84	6.37	5.39	4.90	3.60	2.59
	AGL	3.92	2.45	11.76	9.31	9.61	8.51
ø80	AGM	11.76	9.80	7.84	6.86	-	-
	AGL	9.31	5.88	31.36	24.50	-	-
ø100	AGM	22.54	19.60	16.66	14.70	-	-
	AGL	21.56	13.72	63.70	49.00	-	-

1N≒0.102kgf

Operating Range When Used as Stopper

Bore Size	Non-Rotation Accuracy	
	AGM	AGL
ø 12	±0.07°	±0.10°
ø 16		
ø 20	±0.06°	±0.09°
ø 25		
ø 32	±0.06°	±0.08°
ø 40		
ø 50	±0.05°	±0.06°
ø 63		
ø 80	±0.04°	±0.05°
ø 100		

Bore Size ø 12~ø 25 / AGM12~25(Slide Bearing)

AGM12~25

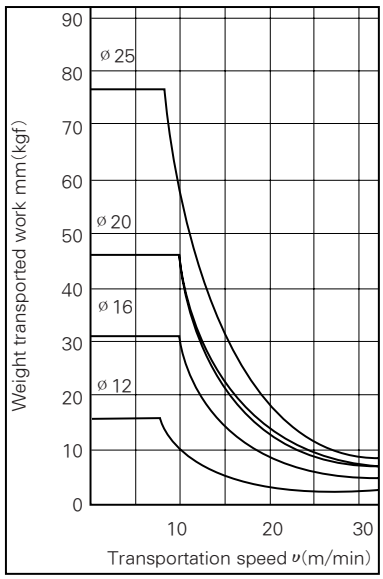

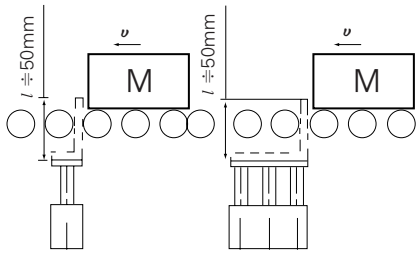

※ In the machine type selection when the dimension becomes longer, select the cylinder having a sufficient I.D. of the tube.

Note 1) When the cylinder is to be used as a stopper use at 30 stroke or less.

Note 2) AGL(Ball bush bearing) cannot be used as stopper.

Bore Size ø 32~ø 100 / AGM32~100(Slide Bearing)

AGM32~100

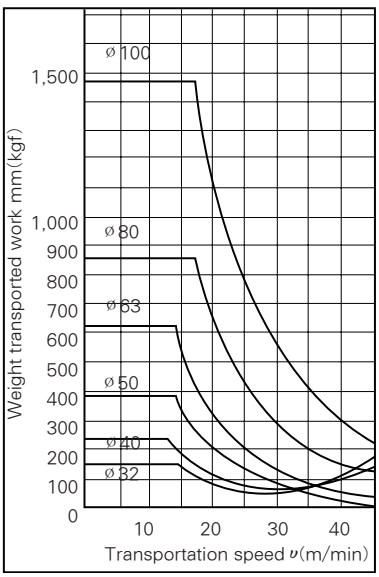

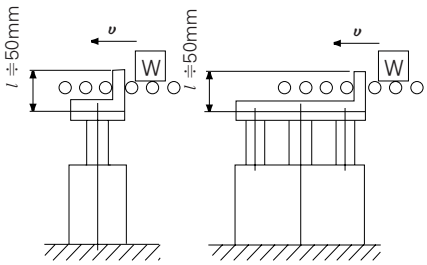

※ In the machine type selection when the dimension becomes longer, select the cylinder having a sufficient bore.

Note 1) When the cylinder is to be used as a stopper use at 50 stroke or less.

Note 2) AGL(Ball bushing bearing) cannot be used as stopper.

Operating Range When Used as Lifter

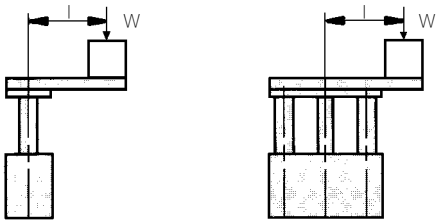

● Select the bore size so that the mass remains at or below the theoretical output(See the chart below)

Bore Size	Theoretical Output
ø12, ø16	40% or Below
ø20, ø25	50% or Below
ø32, ø100	60% or Below

AGM/Slide Bearing

AGM ø12~ø25-□

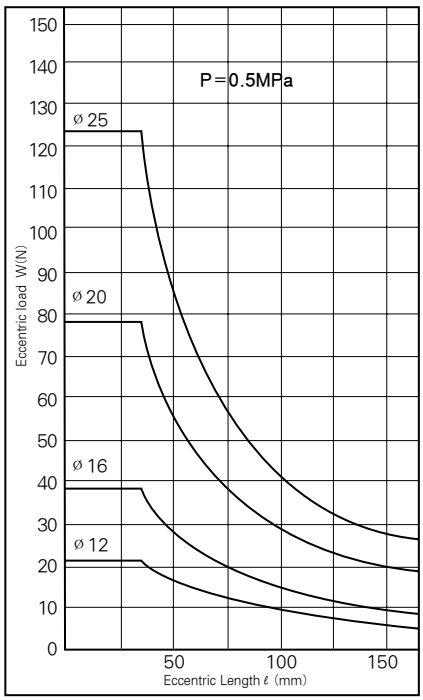

AGL/Ball Bush Bearing

AGL ø12~ø25-10/20/30

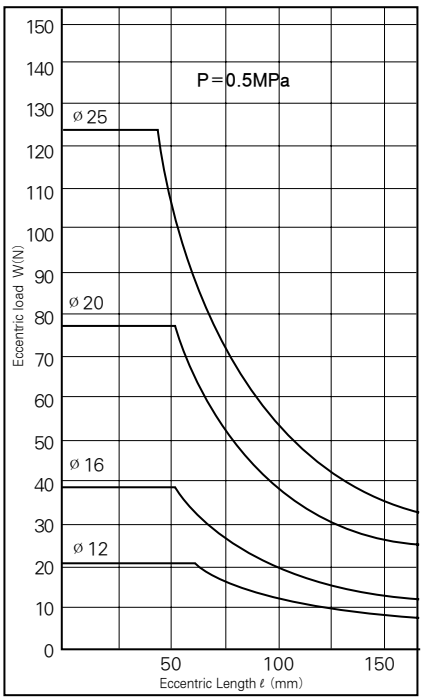

AGL ø12~ø25-30 more stroke

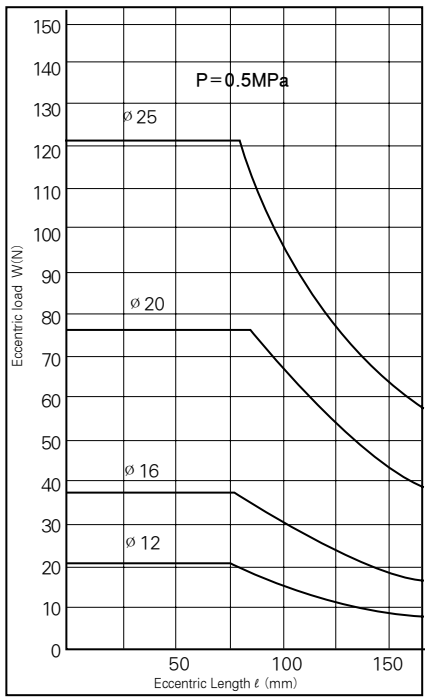

AGM ø32~ø100

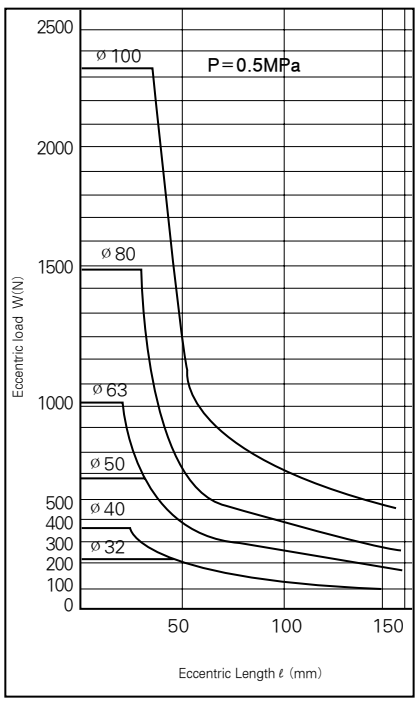

AGL ø32~ø100-25/50

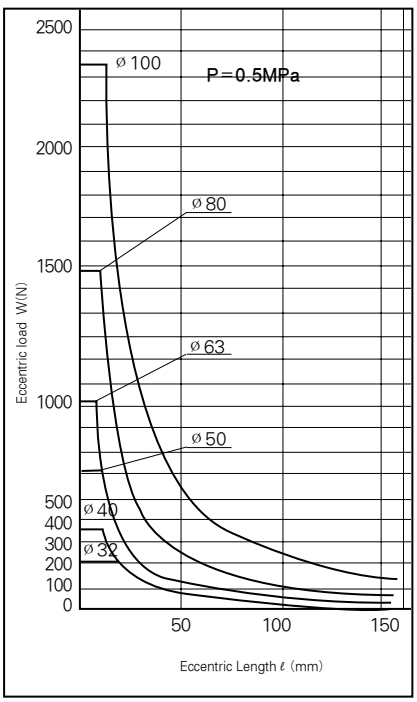

AGL ø32~ø105-75/100

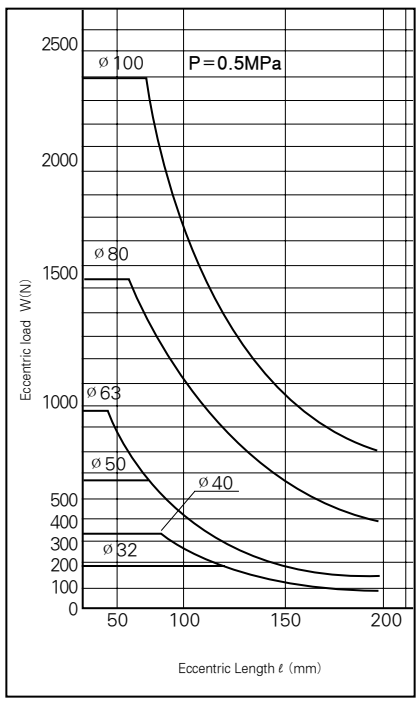

Series AGX/GX

Guide Cylinder/Guide Unit

Bore Size : ø20, ø25, ø32, ø40

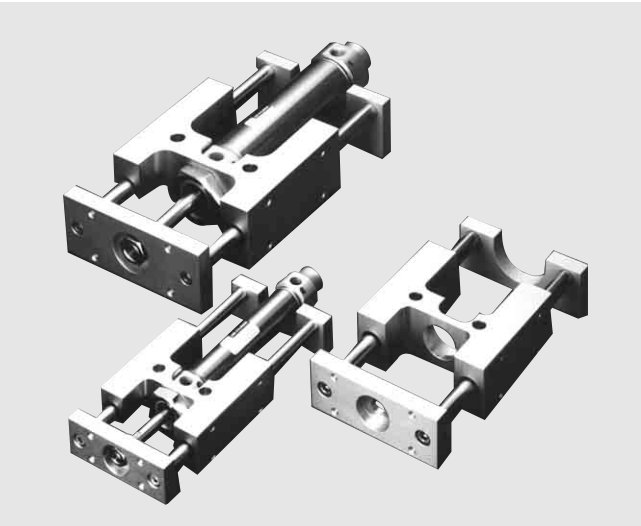

- COMPACT INTEGRATION OF AGX/GX SERIES CYLINDER WITH GUIDE RODS. THE LINEAR TRANSFER UNIT RESISTS LATERAL LOADING AND PROVIDES PRECISE, NON-ROTATING MOTION.
- THE AGX/GX SERIES IS EQUIPPED WITH A STANDARD MAGNET FOR AUTO SWITCH CAPABILITY
- 2 GUIDE RODS OFFER HIGH NON-ROTATING ACCURACY.

Symbols

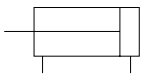

How to Order

AGX B B 40 — 150 A W4 ☐

1 2 3 4 5 6 7 8

GX B B 40 — 150

1 2 3 4

Compact Guide Cylinder

1 Type
Guide Cylinder
· Buit-in magment

2 Type of Bearing
B : Bush Type

3 Mounting
B : Standard

4 Bore Size
20 : 20mm
25 : 25mm
32 : 32mm
40 : 40mm

5 Cylinder Stroke(mm)
ø20, ø25 : 25, 50, 75, 100,125, 150, 200, 250, 300
ø32 : 25, 50, 75, 100, 125, 150, 200, 250, 300, 350, 400
ø40 : 25, 50, 75, 100, 125, 150, 200, 250, 300, 350, 400, 450, 500

6 Cushion
Blank : Rubber Cushion
A : Air Cushion

7 Applicable Auto Switch Reed Switch
(Band Mounted Type)
〈Grommet〉
Blank : Without Auto Switch
W5
※The standard lengh of length of lead is 0.5m, but a case of 3m(possible to take 3m to 3m to all type) is indicated as L.
(Example)W5L

8 Number of Switches
Blank : 2 pcs.
S : 1pc.
N : n pcs.

Guide Unit

1 Type of Bearing
B : Bush Type

2 Mounting
B : Standard

3 Bore Size
20 : 20mm
25 : 25mm
32 : 32mm
40 : 40mm

4 Cylinder Stroke(mm)
ø20, ø25 : 75, 100, 125, 150, 200, 250, 300
ø32 : 75, 100, 125,150, 200, 250, 300, 350, 400
ø40 : 75, 100, 125, 150, 200, 250, 300, 350, 400, 450, 500

Specifications

Fluid	Air
Action	Double Acting
Fluid	Air
Proof Pressure	15kgf/cm²{1500kPa}
Max. Operating Pressure	9.9kgf/cm²{990kPa}
Min. Operating Pressure	0.5kgf/cm²{50kPa}
Ambient and Fluid Temperature	-10℃~+70℃
Lubrication	Non-lube
Thread Tolerance	KS 2 class
Stroke Tolerance	$^{+1.4}_{0}$ mm

Guide Cylinder : Series AGX

Unit : mm

Ø20(AGXBB20-＊＊)

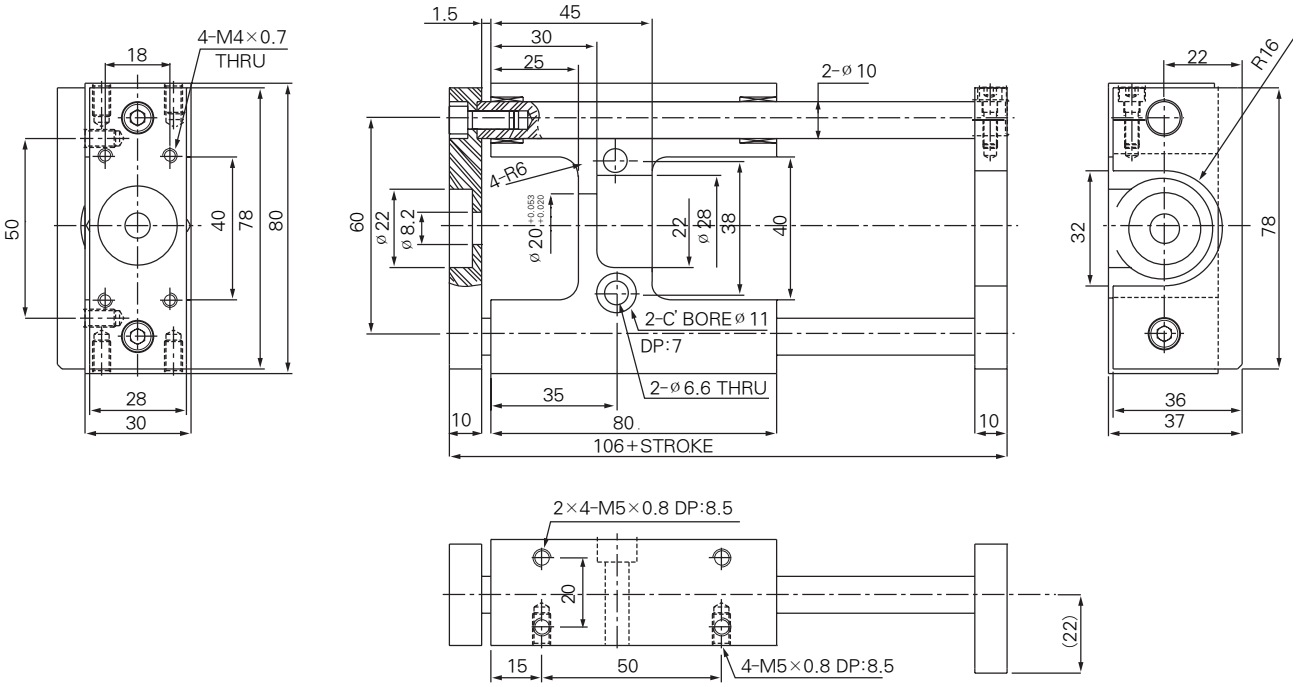

Ø25(AGXBB25-＊＊)

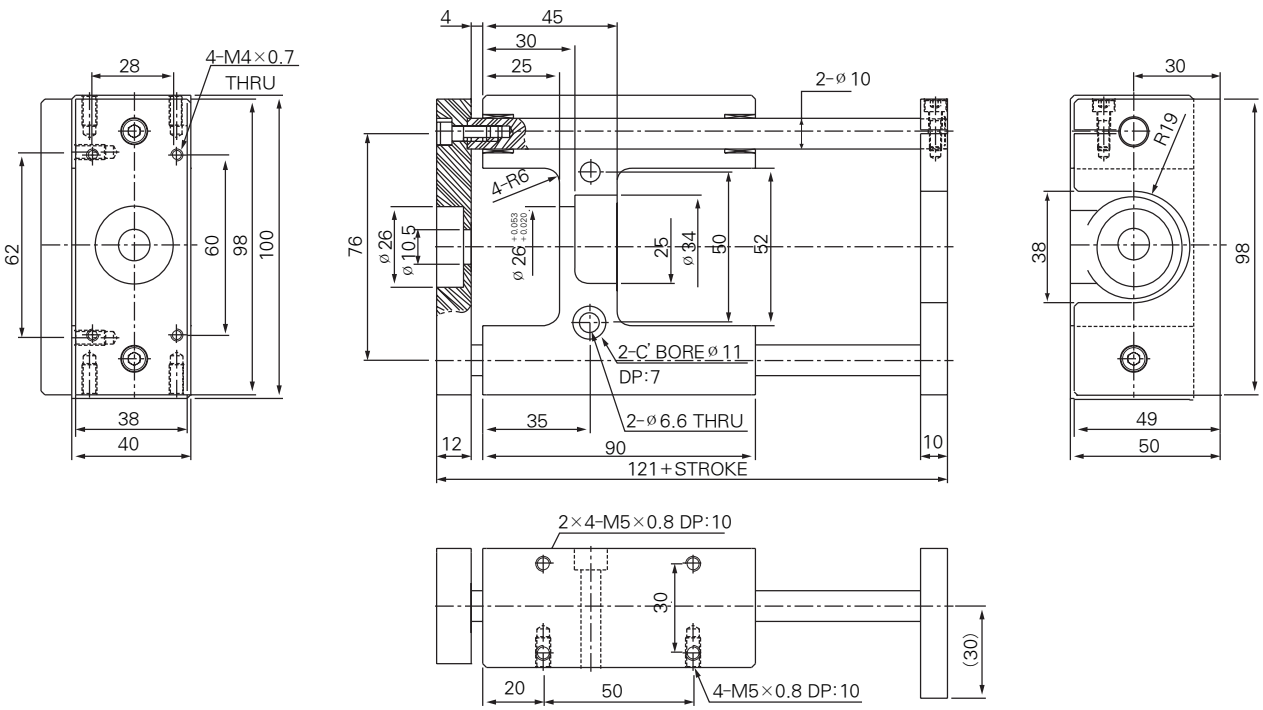

Guide Cylinder : Series AGX

Unit : mm

Ø32(AGXBB32-＊＊)

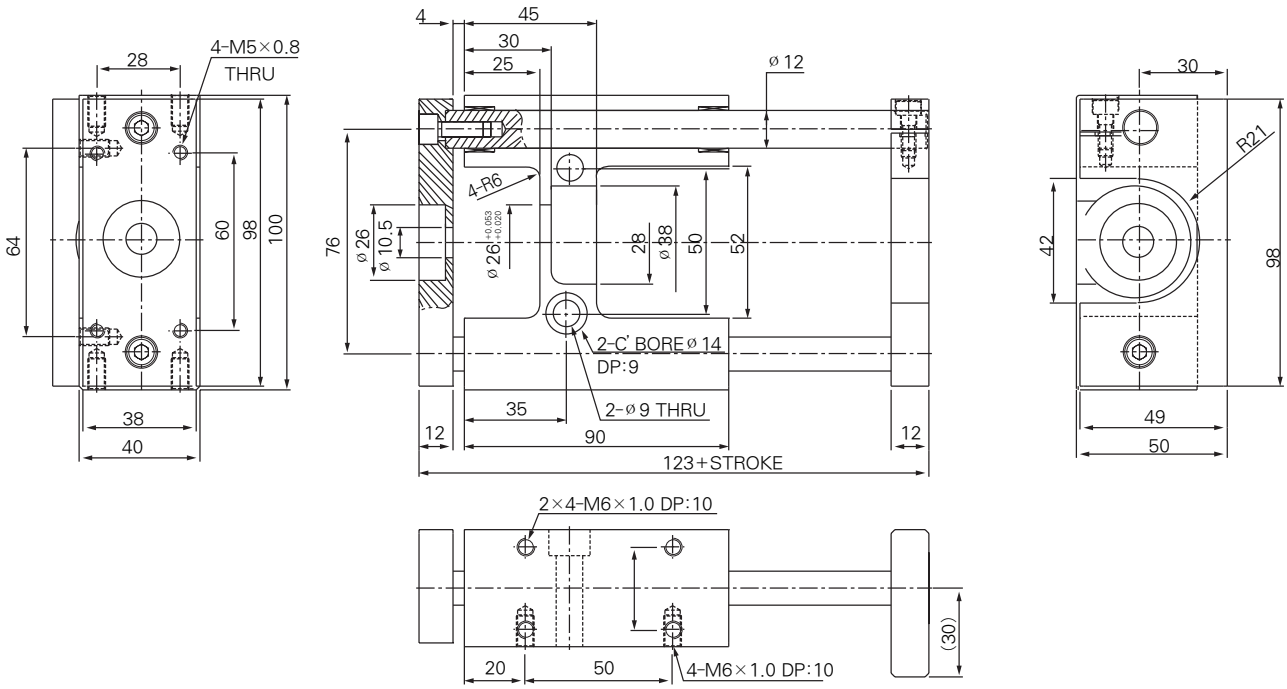

Ø40(AGXBB40-＊＊)

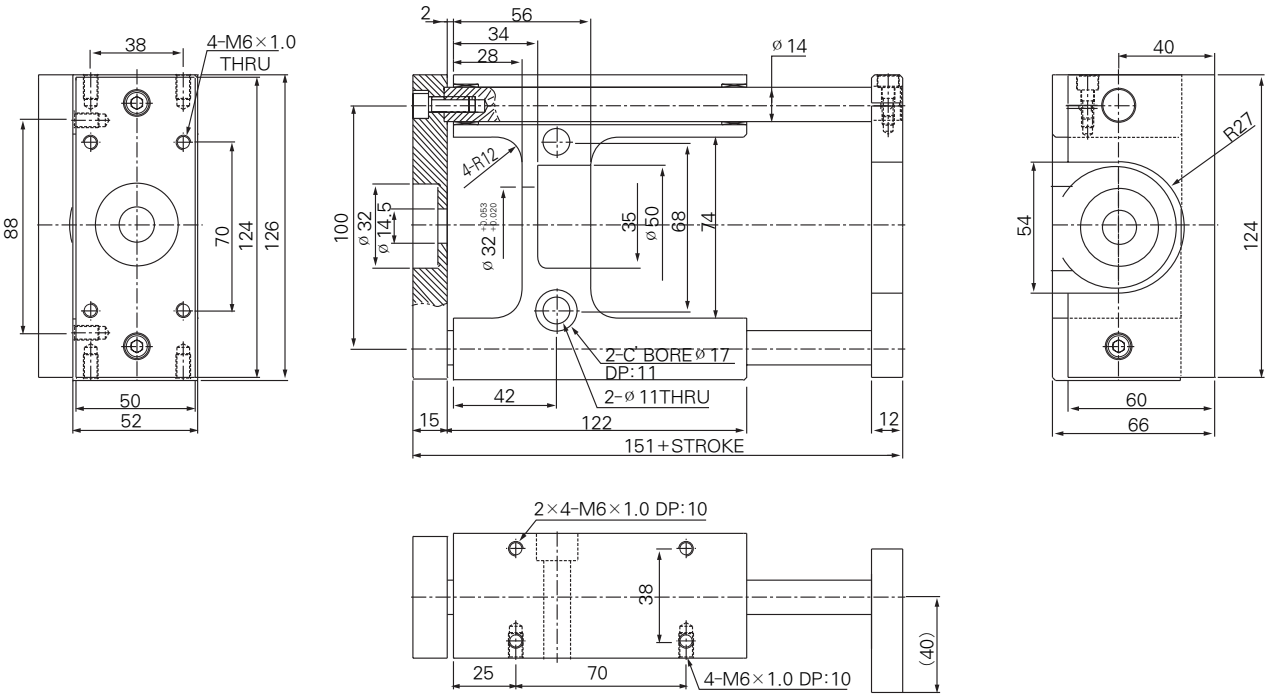

Guide Unit

Unit : mm

Ø20(GXBB20-＊＊)

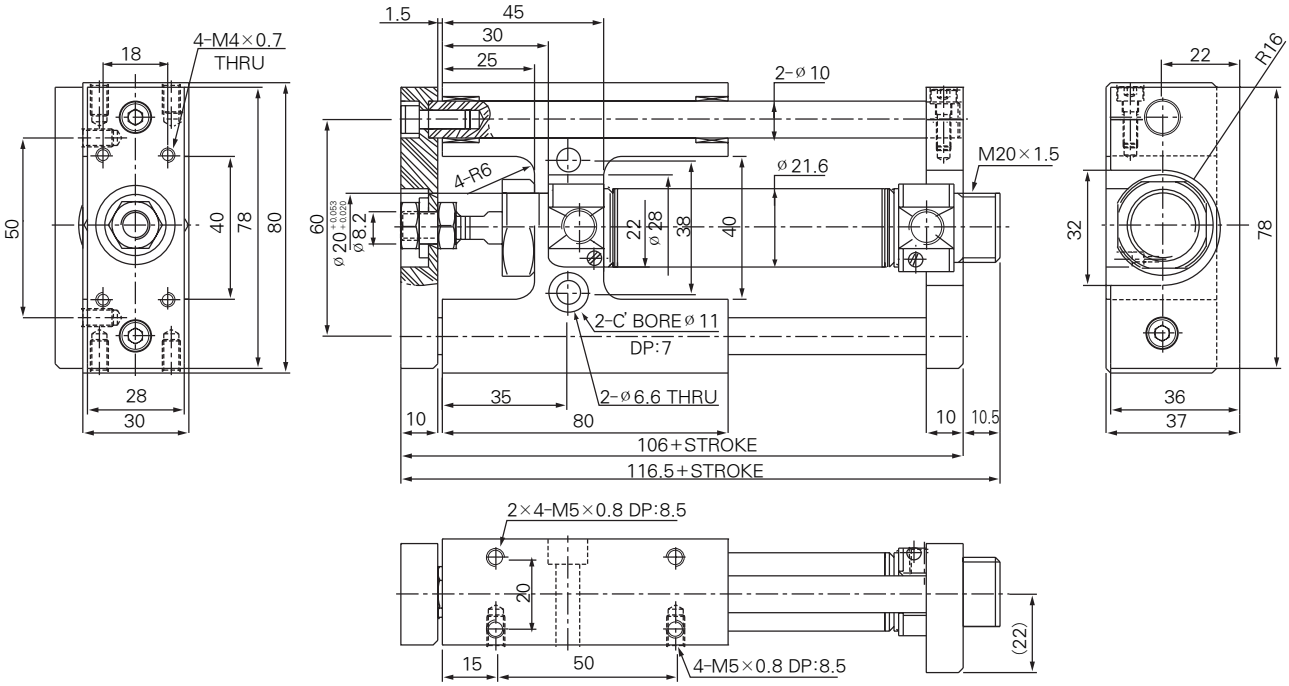

Ø25(GXBB25-＊＊)

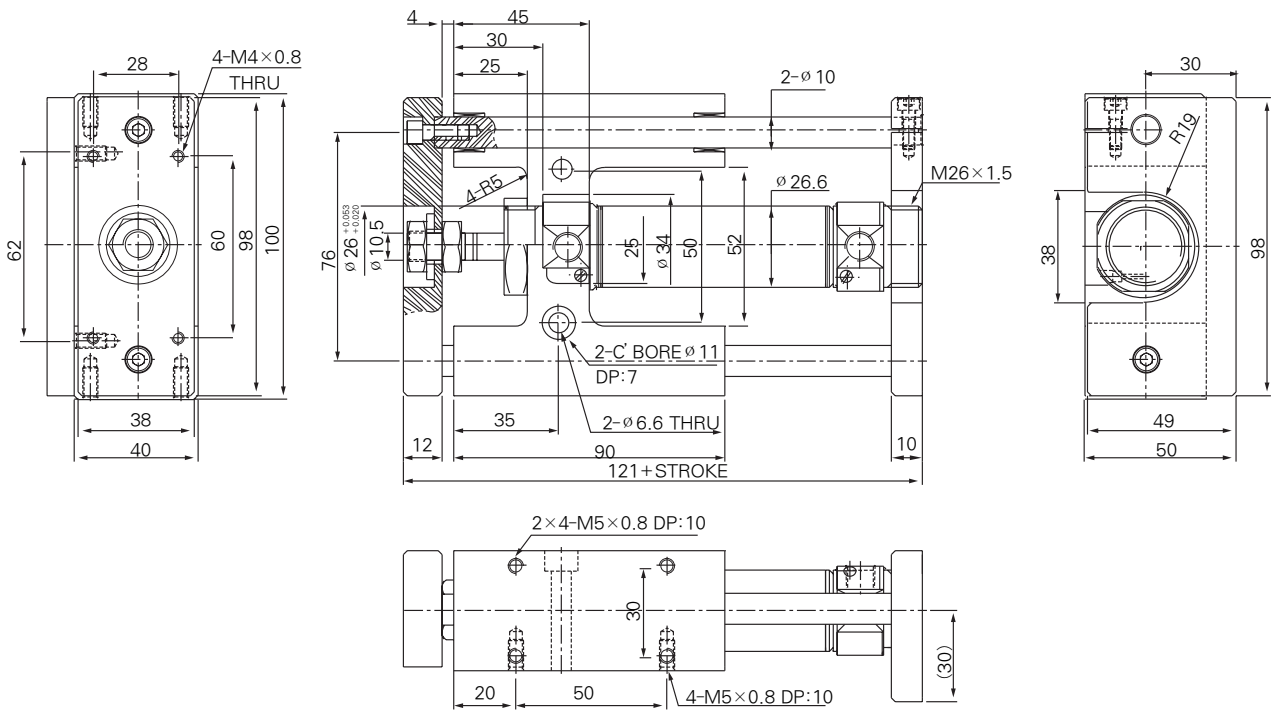

Guide Unit

Unit : mm

Ø32(GXBB32-＊＊)

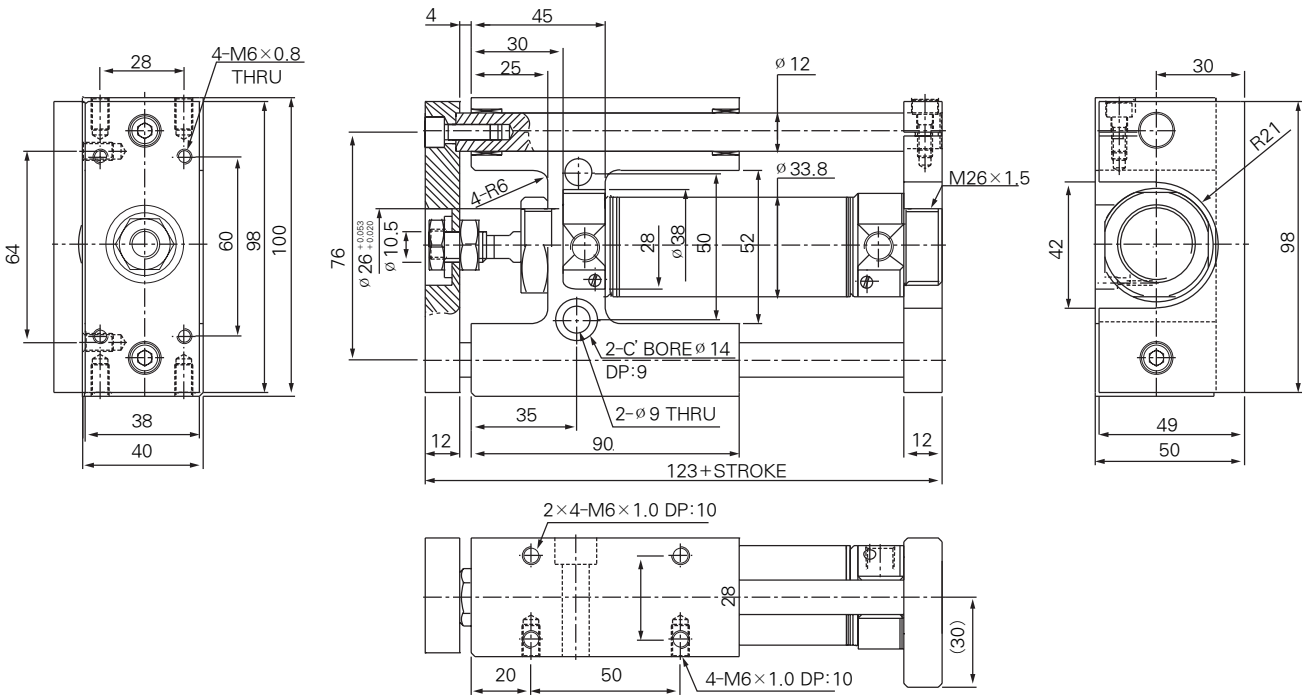

Ø40(GXBB40-＊＊)

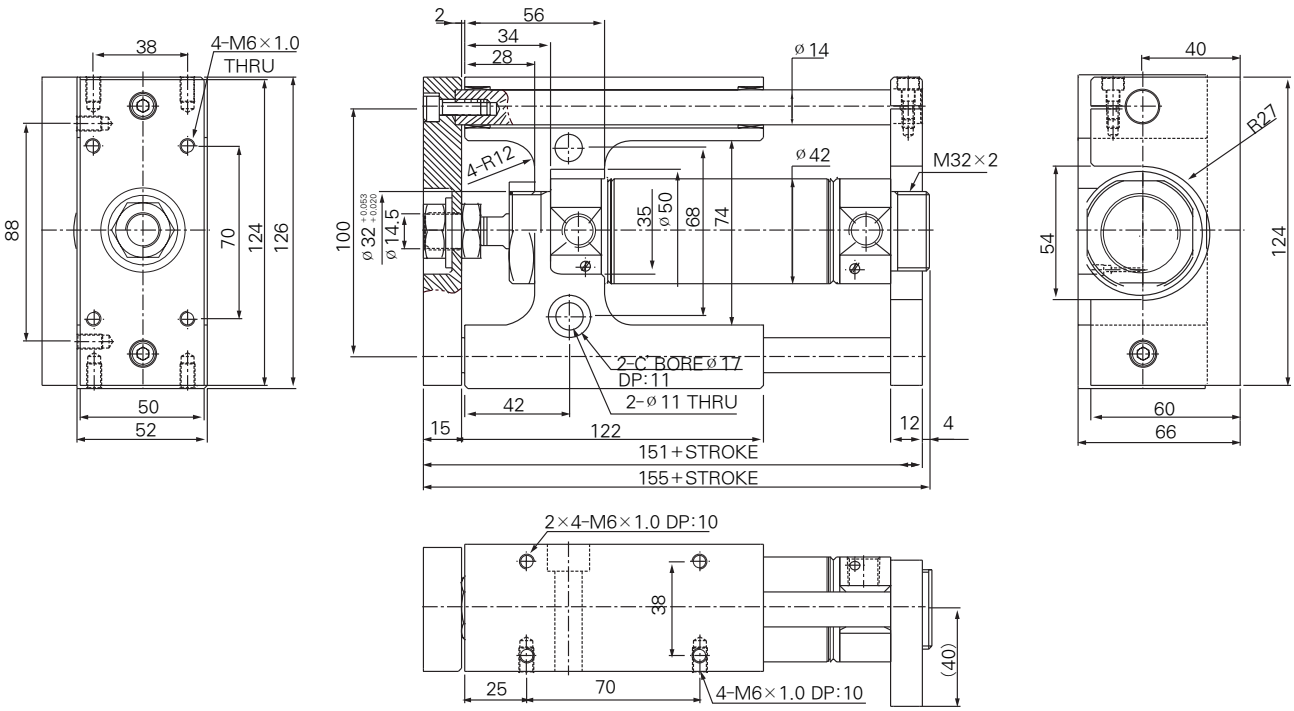

Series ADM

Direct Mount Cylinder/Standard Type : Double Acting

Bore size : ø10, ø16, ø20, ø25

- COMPACT DESIGN SAVES SPACE.
- MULTIPLE MOUNTING OPTIONS
- AUTO SWITCH TYPE AVAILABLE.
- NON LUBRICATED SERVICE STANDARD

Symbol

Double acting

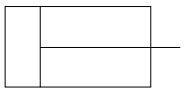

How to Order

ADM 16 – 20 D – □ – W1□ ○

1 2 3 4 5 6 7

1 Direct Mount Cylinder
※ Standard type
Built-in Magnet & Rubber Cushion

2 Bore size(mm)
10 : ø10
16 : ø16
20 : ø20
25 : ø25

3 Stroke(mm)
ø10, 16: 5, 10, 15, 20, 25, 25, 30
ø20, 25: 5, 10, 15, 20, 25, 25, 30, 40, 50

4 Acting
D : Double acting

5 Order Made Option
Blank : Standard
XC16 : Copper-Free

6 Auto Switch
Blank : Without Auto Switch
W13 : Reed Switch - 2 wire (DC24V, AC110V)
W1H : Solid State Switch - 3 wire (DC24V)
※ Standard Auto Switch lead wire length is 1m. 3m leads available on all models by adding a "L" suffix to the part number.
Example) W1H → W1HL

7 Number of Auto Switch
Blank: 2pcs.
S : 1pc.

Minimum Operating Pressure (kgf/cm²)

Type \ Bore size(mm)	10	16	20	25
Double acting (Single rod)	0.6	0.6	0.5	0.5

Standard Specifications

Fluid	Air
Proof pressure	10.5kgf/cm² {1.05MPa}
Max. operating pressure	7kgf/cm² {0.7Mpa}
Ambient and fluid temperature	5 ~ 60℃
Lubrication	Not required
Cushion	Both sides RUBBER Cushion
Rod end thread	Male thread
Thread tolerance	KS 2 Class
Stroke allowance	$^{+1.0}_{0}$
Mounting	Basic type

Standard Stroke

(mm)

Bore size (mm)	Double acting							
	Stroke							
	5	10	15	20	25	30	40	50
10	●	●	●	●	●	●	–	–
16	●	●	●	●	●	●	–	–
20	●	●	●	●	●	●	●	●
25	●	●	●	●	●	●	●	●

Construction Parts List / Double Acting Single Rod

ø 10, 16

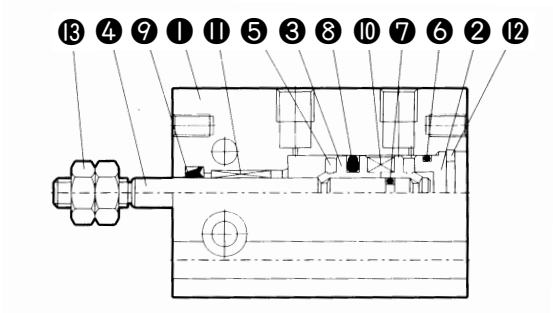

ø 20, ø 25

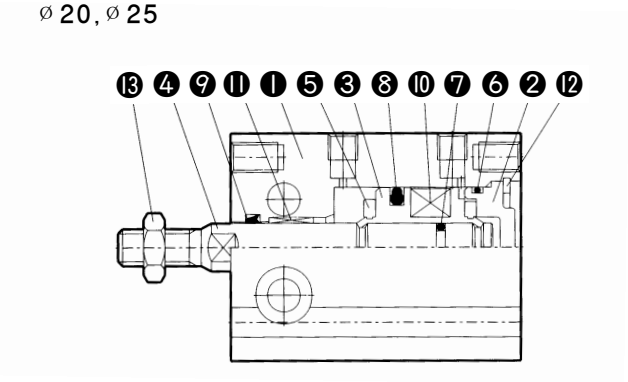

Parts List

No.	Description	Material	Note
❶	Cylinder Tube	Aluminum alloy	Hard alumite
❷	Head cover	Aluminum alloy	Hard alumite
❸	Piston	Brass	
		Aluminum alloy	
❹	Piston rod	Stainless steel	
❺	Bumper	Urethane	
❻	Head Cover Gasket	NBR	
❼	Piston Gasket	NBR	
❽	Piston Packing	NBR	
❾	Rod Packing	NBR	
❿	Magnet	–	
⓫	Bush	Sintered oil bearing alloy	
⓬	Snap ring	Spring steel	Nickel plating
⓭	Rod End Nut	Carbon steel	

Dimensions Double Acting/Single Rod

ø 10

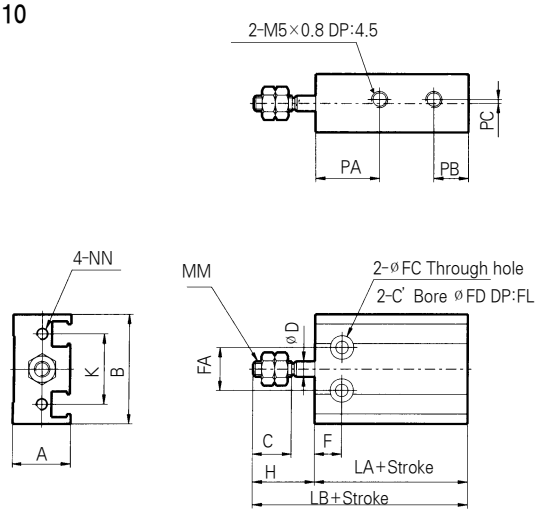

ø 16

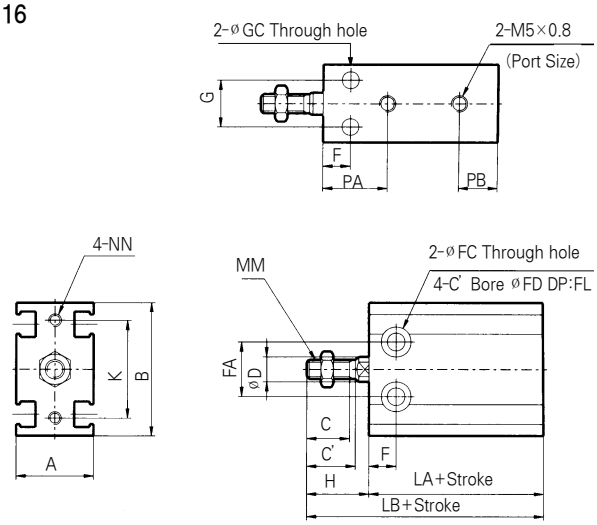

ø 20, ø 25

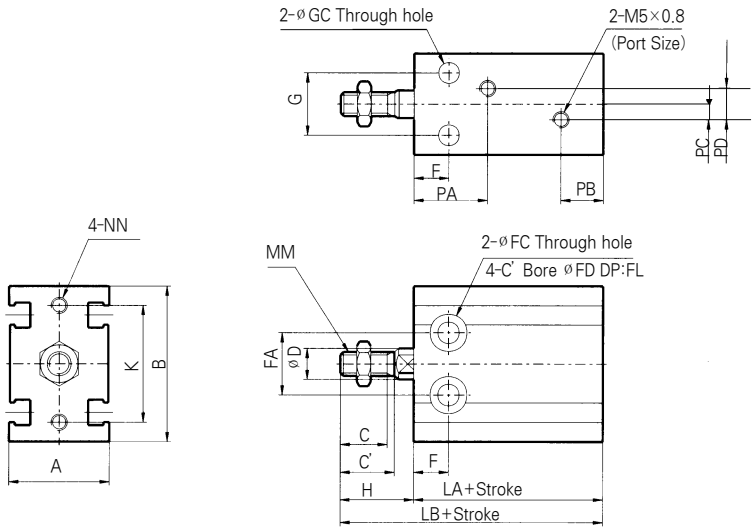

(Unit: mm)

Bore size	A	B	C	C'	D	F	FA	FC	FD	FL	H	K	G	GC	MM	NN	PA	PB	PC	PD	LA	LB
ø 10	15.2	28	10	-	4	7	11	3.2	6	5	16	18	-	-	M4×0.7	M3×0.5 DP:5	16.5	9	1	-	35	51
ø 16	20	34	11	12.5	6	7	14	4.3	7.6	6.5	16	25	12	4.3	M5×0.8	M4×0.7 DP:6	16.5	10	-	-	40	56
ø 20	26	40	12	14	8	9	16	5.3	9.3	8	19	30	16	5.3	M6×1.0	M5×0.8 DP:8	19	11	4	8	44	63
ø 25	32	50	15.5	18	10	10	20	5.3	9.3	9	23	38	20	5.3	M8×1.25	M5×0.8 DP:8	21.5	13	4.5	9	48	71

Series ADMW

Direct Mount Cylinder/Double Acting Double Rod

Bore Size : ø10, ø16, ø20, ø25

- SPACE SAVING COMPACT DESIGN
- MULTIPLE MOUNTINGS
- NON-ROTATING ROD TYPE AVAILABLE
- NON LUBRICATED SERVICE STANDARD

Symbol

Double Rod

How to Order

ADM W 16 – 30 D – □ – W1□ ○

1 2 3 4 5 6 7

1 Double Rod Type

2 Bore Size(mm)
- 10 : ø10
- 16 : ø16
- 20 : ø20
- 25 : ø25

3 Cylinder Stroke
- ø10, 16: 5, 10, 15, 20, 25, 25, 30
- ø20, 25: 5, 10, 15, 20, 25, 25, 30, 40, 50

4 Acting
- D : Double Acting

5 Order Made Option
- Blank : Standard
- XC16 : Copper-Free

6 Auto Switch Available
- Blank : Without Auto Switch
- W1H : Solid State Switch (DC 24V)- 3wire
- W13 : Reed Switch (DC 24V, DC 100V)

※ Standard Auto Switch lead wire length is 1m. 3m leads available on all models by adding a "L" suffix to the part number.
Example) W1H → W1HL

7 Number of Auto Switch
- Blank : 2pcs.
- S : 1pc.

Standard Specifications

Fluid	Air
Proof pressure	10.5kgf/cm²{1.05Mpa}
Max. operating pressure	7kgf/cm²{0.7Mpa}
Ambient and fluid temperature	5~60℃
Lubrication	Not required
Cushion	Both Sides RUBBER Cushion
Rod end thread	Male thread
Thread tolerance	KS 2 Class
Stroke allowance	$^{+1.0}_{0}$
Mounting	Basic type

Minimum Operating Pressure (kgf/cm²)

Bore size	Ø10	Ø16	Ø20	Ø25
Min. operating pressure	1.0	1.0	0.8	0.8

Construction/Parts List

ADMW Ø10, Ø16

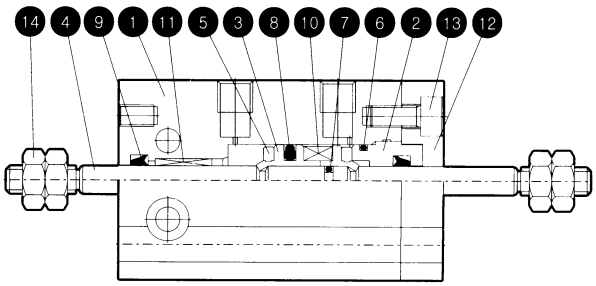

ADMW Ø20, Ø25

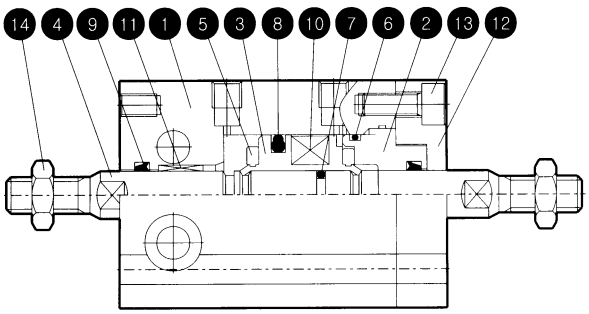

Parts List

No.	Description	Material	Note
❶	Cylinder Tube	Aluminum alloy	Hard alumite
❷	Rod Cover	Aluminum alloy	Hard alumite
❸	Piston	Brass	Ø10
		Aluminum alloy	Ø16~Ø25 Cromate
❹	Piston rod	Stainless steel	
❺	Bumper	Urethane	
❻	Head Cover Gasket	NBR	
❼	Piston Gasket	NBR	
❽	piston Packing	NBR	
❾	Rod Packing	NBR	
❿	Magent	-	
⓫	Bush	Sintered oil bearing alloy	
⓬	Retainer	Aluminum alloy	
⓭	Hexagonal Head Cap Screw	Carbon steel	
⓮	Rod End Nut	Carbon steel	

Double Acting/Double Rod Type(ADMW)

ADMW10

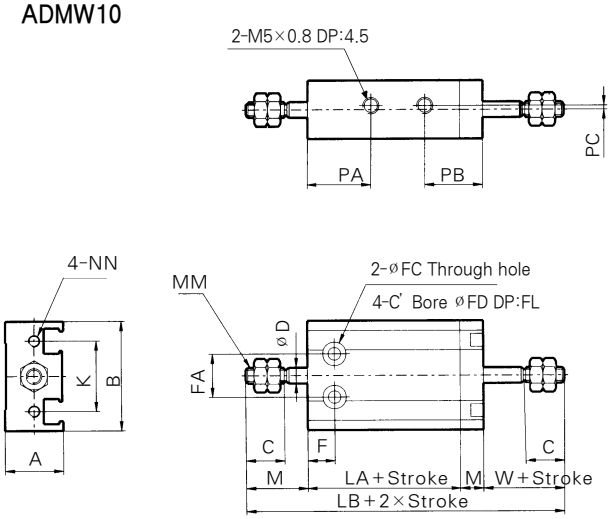

ADMW16

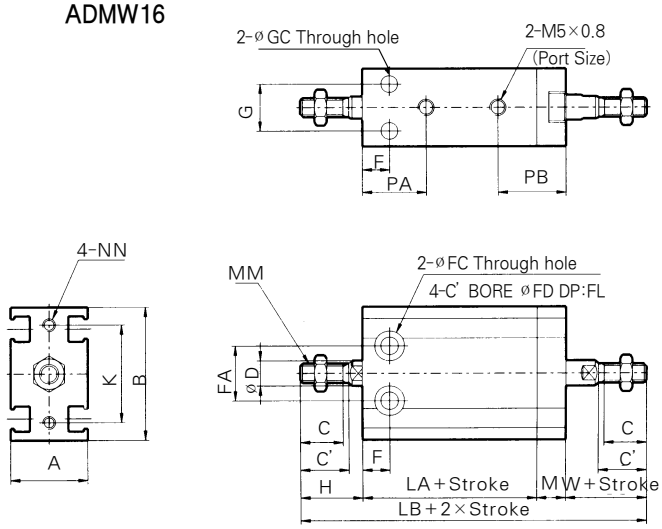

ADMW20
ADMW25

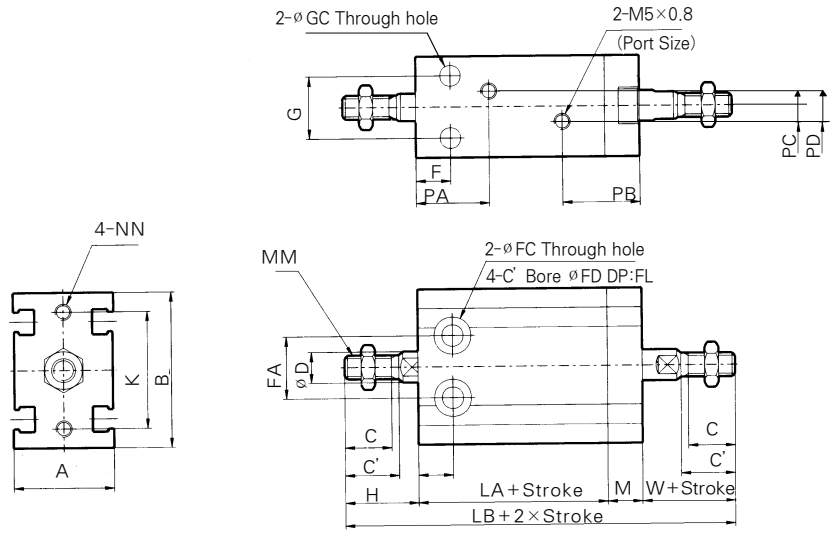

(Unit: mm)

Bore size	A	B	C	C'	D	F	FA	FC	FD	FL	H	K	M	G	GC	MM	NN	PA	PB	PC	PD	W	LA	LB
Ø10	15.2	28	10	-	4	7	11	3.2	6	5	16	18	6	-	-	M4×0.7	M3×0.5 DP:5	16.5	15	1	-	16	35	73
Ø16	20	34	11	12.5	6	7	14	4.3	7.6	6.5	16	25	7.5	12	4.3	M5×0.8	M4×0.7 DP:6	16.5	17.5	-	-	16	40	79.5
Ø20	26	40	12	14	8	9	16	5.3	9.3	8	19	30	9	16	5.3	M6×1.0	M5×0.8 DP:8	19	20	4	8	19	44	91
Ø25	32	50	15.5	18	10	10	20	5.3	9.3	9	23	38	9	20	5.3	M8×1.25	M5×0.8 DP:8	21.5	22	4.5	9	23	48	103

Series ADMK

Direct Mount Cylinder/Double Acting/Non-Rotating Rod/Single Rod

Bore Size : ø10 ø16, ø20, ø25

- SPACE SAVING COMPACT DESIGN
- MULTIPLE MOUNTINGS
- NON-ROTATING ROD TYPE AVAILABLE
- NON LUBRICATED SERVICE STANDARD

Symbol

Non-Rotating Rod/Single Rod

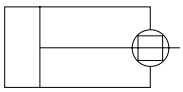

How To Order

ADMK 16 — 30 D — □ — W1□ ○

1 2 3 4 5 6 7

1 Non-Rotating Rod/ Single Rod Type

2 Bore Size(mm)
- 10 : ø10
- 16 : ø16
- 20 : ø20
- 25 : ø25

3 Cylinder Stroke

Standard Stroke (mm)

Bore size	Standard Stroke
ø10, ø16	5,10,15,20,25,30
ø20, ø25	5,10,15,20,25,30,40,50

4 Acting
- D : Double acting

5 Order Made Option
- Blank : Standard
- XC16 : Copper - free

6 Auto Switch Available
- Blank : Without Auto Switch
- W1H : Solid State Switch (DC24V)-3wire
- W13 : Reed switch (DC24V, AC100V)

※ Standard Auto Switch lead wire length is 0.5m 3m leads available on all models by adding a "L" suffix to the part number.
Example)W1H → W1HL

7 Number of Auto Switch
- Blank : 2 pcs.
- S : 1pc.
- n : npcs.

Non-Rotating Piston Rod Accuracy/Specification

Bore size	ø10, ø16	ø20, ø25
Non-rotating accuracy	±0.8°	±0.5°

Standard Specifications

Acting	Double acting single rod
Fluid	Air
Proof pressure	10.5kgf/cm²{1.05MPa}
Max. operating pressure	7kgf/cm²{0.7MPa}
Ambient and fluid temperature	5 ~ 60℃
Lubrication	Not required
Piston Speed	50 ~ 500 mm/sec
Cushion	Both Side RUBBER Cushion
Rod end thread	Male thread
Thread tolerance	KS 2 class
Stroke allowance	$^{+1.0}_{0}$
Mounting	Basic type

Construction/Parts List/Non-Rotating Piston Single Rod Type

ADMK10
ADMK16

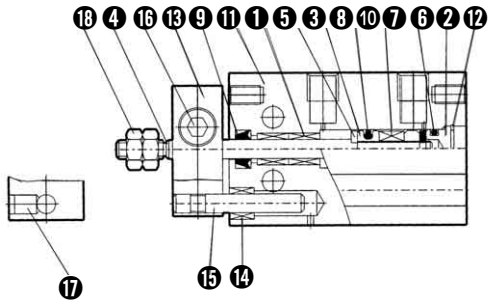

ADMK20
ADMK25

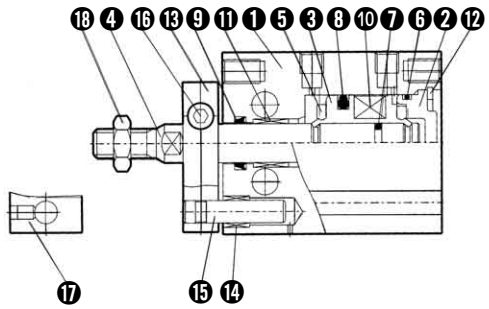

No.	Description	Material	Note
❶	Cylinder Tube	Alluminum Alloy	Hard Alumite
❷	Head Cover	Alluminum Alloy	Alumite
❸	Piston	Brass	ø10
		Alluminum Alloy	ø16~ø25Chromate
❹	Piston Rod	Stainless Steel	
❺	Bumper	Urethane Rubber	
❻	Head Cover Gasket	NBR	
❼	Piston Gasket	NBR	
❽	Piston Packing	NBR	
❾	Rod Packing	NBR	
❿	Magnet	–	
⓫	Bush	Sintered Oil Bearing Alloy	
⓬	Snap Ring	Spring steel	Nickel Plating
⓭	Anti-rotating Plate	Alluminum alloy	Hard Alumite
⓮	Guide Bush	Sintered Oil Bearing Alloy	
⓯	Guide Rod	Stainless steel	
⓰	Haxagonal Head cap Screw	Carbon Steel	
⓱	Hexagon Socket	Carbon Steel	
⓲	Rod End nut	Carbon Steel	Nickel Plating

Double Acting/Non-Rotating Single Rod

ADMK 10

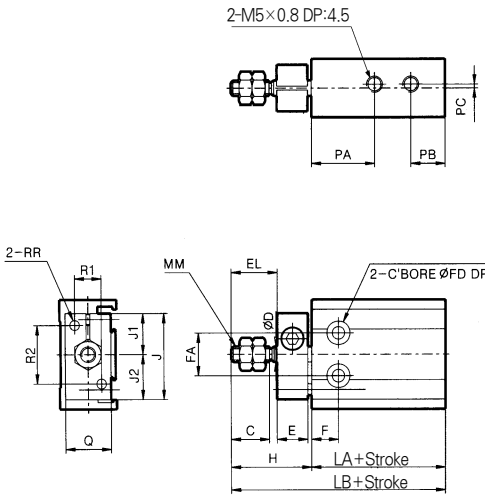

ADMK 16

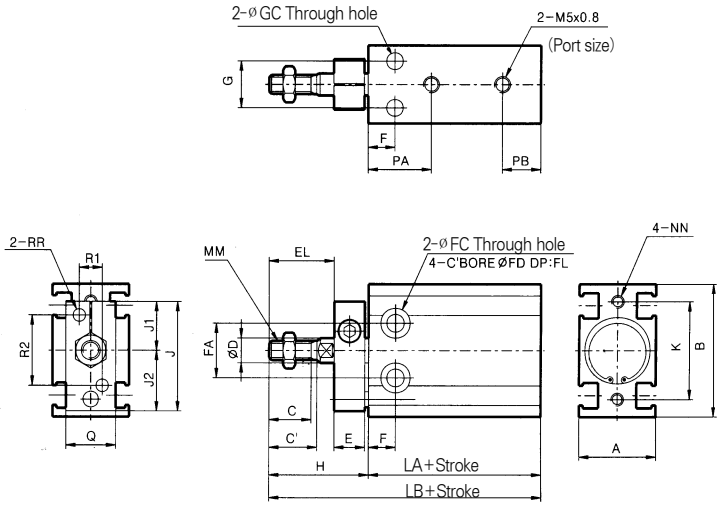

ADMK 20
ADMK 25

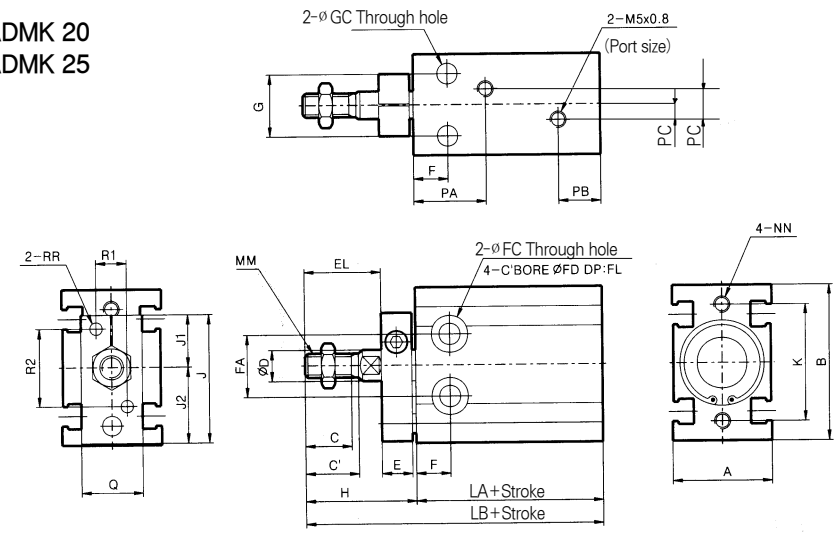

(Unit: mm)

Bore size	E	EL	J	J1	J2	Q	R1	R2	RR
Ø10	8	12	22	10.5	11.5	12	7	15	M3×0.5
Ø16	8	17	28	12.5	15.5	13	6	18	M4×0.7
Ø20	8	20	33	13.5	19.5	16	8	20	M4×0.7
Ø25	10	22	43.5	19	24.5	20	10	28	M5×0.8

Bore size	A	B	C	C'	D	F	FA	FC	FD	FL	G	GC	H	K	MM	NN	PA	PB	PC	PD	LA	LB
Ø10	15.2	28	10	-	4	7	11	3.2	6	5	-	-	21	18	M4×0.7	M3×0.5 DP:5	16.5	9	1	-	35	78
Ø16	20	34	11	12.5	6	7	14	4.3	7.6	6.5	12	4.3	26	25	M5×0.8	M4×0.7 DP:6	16.5	10	-	-	40	89.5
Ø20	26	40	12	14	8	9	16	5.3	9.3	8	16	5.3	29	30	M6×1.0	M5×0.8 DP:8	19	11	4	8	44	101
Ø25	32	50	15.5	18	10	10	20	5.3	9.3	9	20	5.3	33	38	M8×1.25	M5×0.8 DP:8	21.5	13	4.5	9	48	113

Series ADMKW

Direct Mount Cylinder/Double Acting/Non-Rotating Piston Double Rod

Bore Size : ø10 , ø16, ø20, ø25

- COMPACT DESIGN SAVES SPACE.
- PRECISE AND DIRECT MOUNTING.
- HIGH NON-ROTATING ACCURACY

Symbol

Non-Rotating Rod/Double Rod

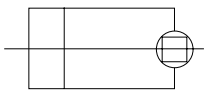

How to Order

ADM KW 16 — 30 D — □ — W1□ ○

1 2 3 4 5 6 7

1 Non-Rotating Rod/ Double Rod Type

2 Bore Size(mm)
- 10 : ø10
- 16 : ø16
- 20 : ø20
- 25 : ø25

3 Cylinder Stroke
- ø10, 16: 5, 10, 15, 20, 25, 25, 30
- ø20, 25: 5, 10, 15, 20, 25, 25, 30, 40, 50

4 Acting
- D: Double acting

5 Order Made Option
- Blank : Standard
- XC16 : Copper-Free

6 Auto Switch Available
- Blank : Without Auto Switch
- W1H : Reed Switch type (DC24V)
- W13 : Solid State Switch type (DC24V, AC100V)

※ Standard Auto Switch lead wire length is 1m. 3m leads available on all models by adding a "L" suffix to the part number.
Example) W1H → W1HL

7 Number of Auto Switch
- Blank : 2 pcs.
- S : 1 pc.
- n : n pcs.

Double Acting/Non-Rotating Piston Double Rod

ADMKW10

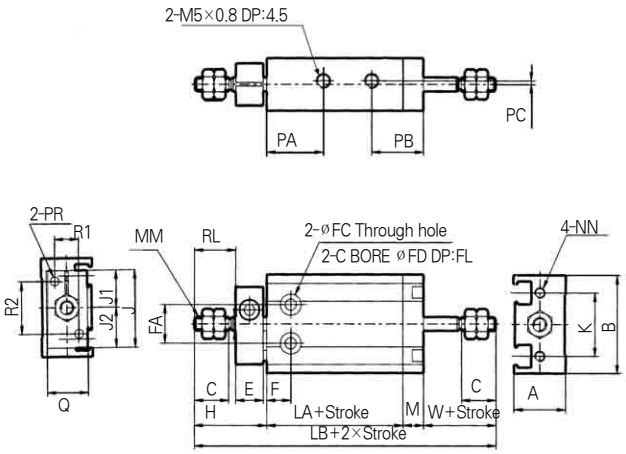

ADMKW16

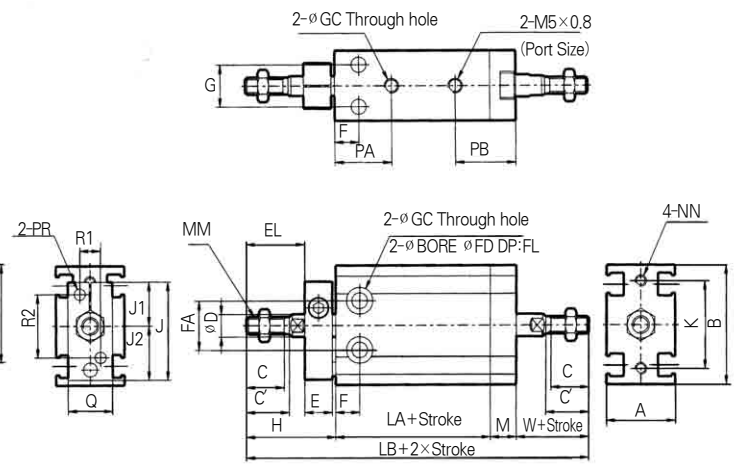

ADMKW20
ADMKW25

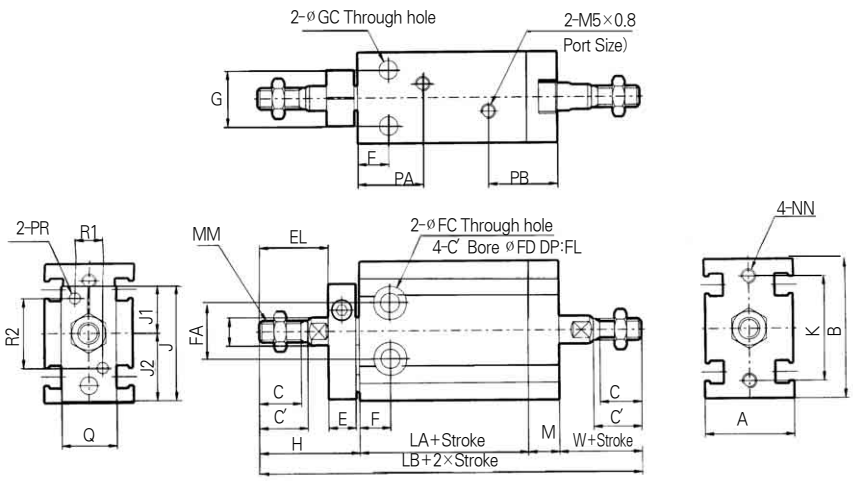

(Unit:mm)

Bore Size	E	EL	J	J1	J2	Q	R1	R2	RR
Ø10	8	12	22	10.5	11.5	12	7	15	M3×0.5
Ø16	8	17	28	12.5	15.5	13	6	18	M4×0.7
Ø20	8	20	33	13.5	19.5	16	8	20	M4×0.7
Ø25	10	22	43.5	19	24.5	20	10	28	M5×0.8

Bore Size	A	B	C	C′	D	F	FA	FC	FD	FL	G	GC	H		MM	NN	PA	PB	PC	PD	LA	LB
Ø10	15.2	28	10	-	4	7	11	3.2	6	5	-	-	21	18	M4×0.7	M3×0.5 DP:5	16.5	9	1	-	35	56
Ø16	20	34	11	12.5	6	7	14	4.3	7.6	6.5	12	4.3	26	25	M5×0.8	M4×0.7 DP:6	16.5	10	-	-	40	66
Ø20	26	40	12	14	8	9	16	5.3	9.3	8	16	5.3	29	30	M6×1.0	M5×0.8 DP:8	19	11	4	8	44	73
Ø25	32	50	15.5	18	10	10	20	5.3	9.3	9	20	5.3	33	38	M8×1.25	M5×0.8 DP:8	21.5	13	4.5	9	48	81

Auto Switch Setting Position(W1□ Type)

Double Acting Single Rod

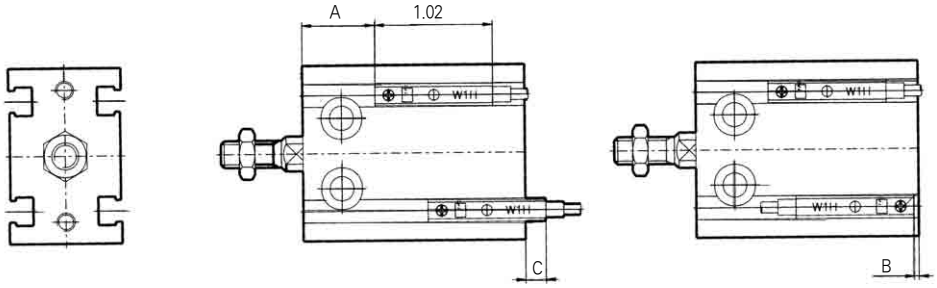

Double Acting Double Rod

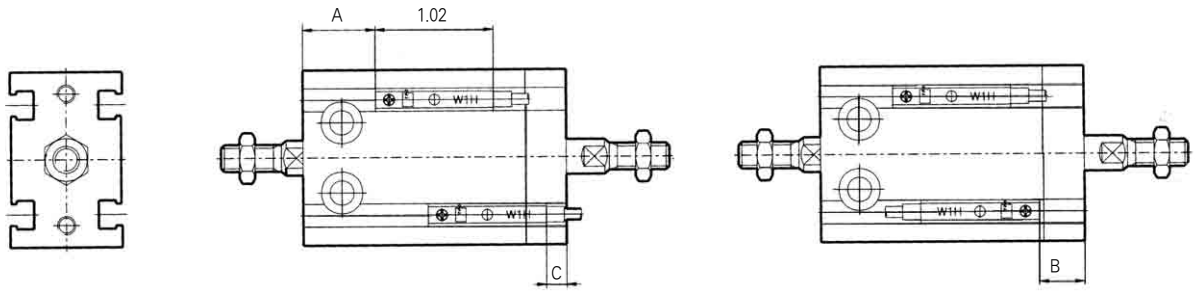

(Unit:mm)

Bore size	Double Acting Single Rod			Double Acting Double Rod		
	A	B	C	A	B	C
ø10	13	-1	-7	13	5	-1
ø16	13	0.5	-6	13	8	1.5
ø20	16	1	-4.5	16	10	4.5
ø25	19.5	3	-3	19.5	12	6

Auto Switch Specifications

Auto Switch No.	W1H□	W13□
Type	Solid State Switch	Reed Switch
Application	Relay, Sequence Control	
Wiring Method	3 Wire System	2 Wire System
Power Source	DC10~28V	–
Load Voltage	DC28V Less	DC24V, AC110V
Current Consumption	100mA Less	DC24V : 5~40mA AC110V : 5~20mA
Internal Voltage Drop	100mA~0.5A Less	40mA~2.4A Less
Leakage Current	DC24V~10μA Less	
Load Current	OFF: 5mA or Less ON : 35mA or Less	–

- Operating Time : Max. 1ms
- Lead Wire : Oil resistant vinyl cord. ø0.13, 0.2mm², 3 cores(red white, black), cores(red, black), 0.5m long
- Shock Resistance : 1000m/S² (102G)
- Insulation Resistance : 50MΩ or more under the test voltage 500V DC between case and cable.
- Withstand Voltage : 1000VAC for 1min.(between lead wire and the case)
- Ambient Temperature : (-10~60℃)
- Protection Structure : IEC Standard, watertight and oil resising structure

※ "L" is added to the end when the lead is 3m long.
(ex) W1□L

Auto Switch Internal Circuit

W1H□

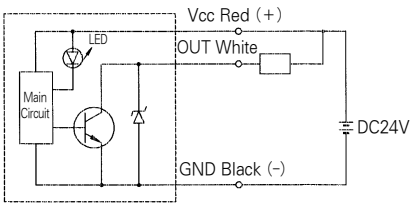

W13□

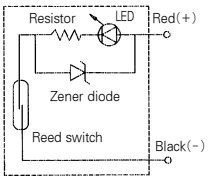

Auto Switch Dimensions (mm)

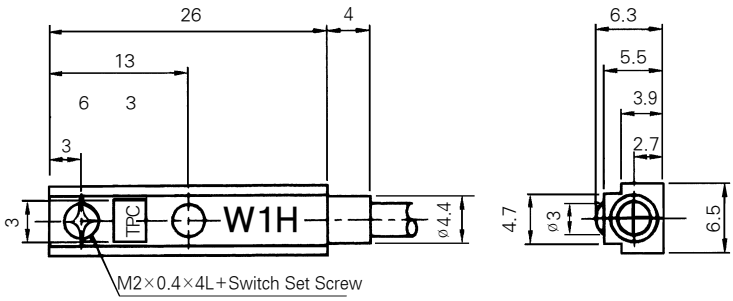

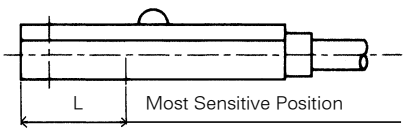

(mm)

Stations	W1H□	W13□
L	10	15
Operating Range	4~10	4~10

Series ADR

Double Rod Cylinder

Bore Size : ø10, ø16, ø20, ø25

- HIGH LATERAL LOAD CAPABILITY
- ADJUSTABLE STROKE IS AVAILABLE
- A THIN AND COMPACT DOUBLE ROD CYLINDER
- BALL BUSHING OPTION
- AUTO SWITCH READY
- NON-LUBE SERVICE STD.

How to Order

ADR M 10 — 30 — W1□ S

1 2 3 4 5 6

1 Double Rod Cylinder
(Built-in magnet : standard)

2 Type of Bearing
M : Slide bearing type
L : Ball bushing bearing type

3 Bore Size
10 : 10mm
16 : 16mm
20 : 20mm
25 : 25mm

4 Stroke(mm)
ϕ10 : 10, 15, 20, 25, 30
ϕ16 : 10, 15, 20, 25, 30, 35, 40, 45, 50
ϕ20 : 10, 15, 20, 25, 30, 35, 40, 45, 50
ϕ25 : 10, 15, 20, 25, 30, 35, 40, 45, 50, 55, 60, 65, 70, 75, 80

5 Type of Auto Switch
Blank : Without Auto Switch
W1H : Solid State Switch(DC24V)
W13 : Reed Switch(AC110V,DC24V)
※ Standard Auto Switch lead wire length is 1m, 3m leads available on all models by adding a "L" suffix to the part number.
Example W1H → W1HL

6 Number of Switches
Blank : 2 pcs.
S : 1 pc.
n : n pcs.

Specifications

Acting	Double Acting Double Rod
Fluid	Air
Max. Operating Pressure	10 kgf/cm²{0.98MPa}
Proof Pressure	7 kgf/cm²{0.7MPa}
Min. Operating Pressure	1 kgf/cm²{0.01MPa}
Amibient and Fluid Temperature	-10℃~+60℃
Piston Speed	30~300 mm/s
Cushion	Rubber Cushion
Lube	None(Non-Lube)
Stroke Adjustment Range	0~-5mm
Bearing	Slide Bearing, Ball Bush Bearing (Same Dimensions)

Plate Can be Mounted From Three Faces

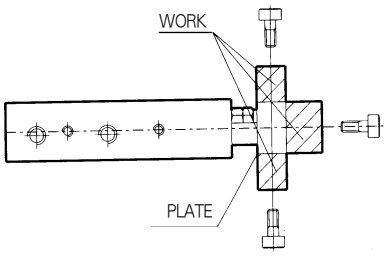

Standard Stroke

Model	Bearing	Bore Size	Standard Stroke
ADRM	Slide Bush Bearing	10	10, 15, 20, 25, 30
		16	10, 15, 20, 25, 30, 35, 40, 45, 50, 60, 70, 80, 90, 100
		20	10, 15, 20, 25, 30, 35, 40, 45, 50
		25	10, 15, 20, 25, 30, 35, 40, 45, 50, 60, 70, 75, 80, 90, 100
ADRL	Ball Bush Bearing	10	10, 15, 20, 25, 30
		16	10, 15, 20, 25, 30, 35, 40, 45, 50, 60, 70, 80, 90, 100
		20	10, 15, 20, 25, 30, 35, 40, 45, 50
		25	10, 15, 20, 25, 30, 35, 40, 45, 50, 60, 70, 75, 80, 90, 100

Theoretical Force

Unit:N

Model	Rod Dia (mm)	Piston Area	Operating Direction (mm²)	Operating Pressure (Mpa)						
				0.1	0.2	0.3	0.4	0.5	0.6	0.7
ADR M/L 10	6	OUT	157	15.7	31.4	47.1	62.8	78.5	94.2	110
		IN	100	10.0	20.0	30.0	40.0	50.0	60.0	70.0
ADR M/L 16	8	OUT	402	40.2	80.4	120.6	160.8	201	241.2	281.4
		IN	245	24.5	49.0	73.5	98.0	122.5	147	171.5
ADR M/L 20	10	OUT	628	62	125	188	251	314	376	439
		IN	471	47	94	141	188	235	282	329
ADR M/L 25	12	OUT	982	98.2	196	295	393	491	589	687
		IN	580	58.0	116	174	232	290	348	406

Operating Conditions

Inclination of plate end

The standard amount of inclination X of the plate end when no load in applied is shown in the graph below.

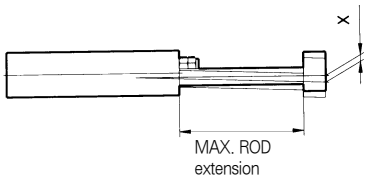

Non-rotating accuracy

Standards of non-rotating accuracy θ° are values lower than those shown in the table below.

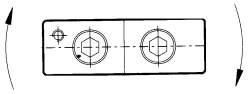

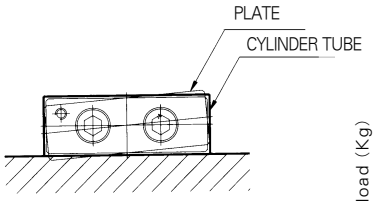

Maximum allowable load

The maximum allowable load will be lower than the values shown in the graph under the below when the cylinder is mounted as shown below.

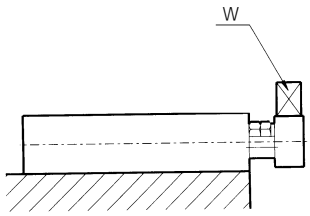

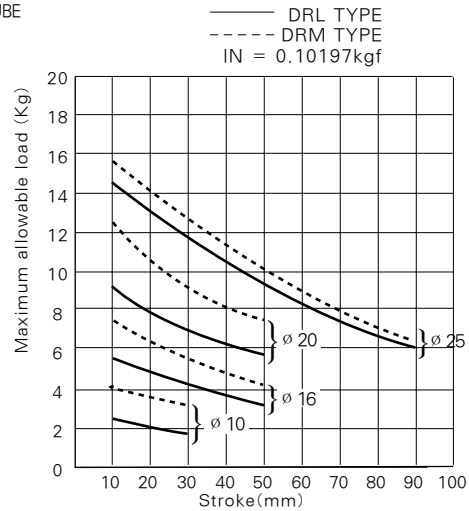

Non-Rotating Accuracy

Cylinder Bore Size(mm)	ADRM (Slide bearing)	ADRL (Ball bush bearing)
ø 10	±0.15°	±0.15°
ø 16, ø 20	±0.15°	±0.13°
ø 25	±0.15°	±0.1°

Precautions

Mounting

① The Double rod cylinder can be mounted on three sides. However, the mating surface must be flat(Flatness : 0.05 (reference value) max.).
Otherwise desired piston rod operation and a malfunction may result.

② Mount the cylinder while the piston is retracted, Pay attention not to scratch or dent the slide part of the piston rod treatment Air leaks due to damaged packings may result in faulty operation.

③ Cylinder mounting face has hard alumite treatment but care should still be taken to avoid damaging it as this would result in loss of durability and faulty operation.

Piping

① The Double rod cylinder is provided with two supply ports in respective directions of operation. Change the plug position according changed, be sure to check that no air leaks from the plug. When a little amount of air still leaks, remove the plug and check the seat before ressembly.

② At the time of pipe-laying, thoroughly flush pipes and joints with air and then connect them.

③ Provide an air filter to supply sufficiently purified compressed air.

④ Cylinder tube can be used without oiling, but if you oil it, use turbine oil class-1(ISO VG32).
(Do not use machine oil or spindle oil.)

Adjustment of stroke

① The Double rod cylinder is provided with a bolt to adjust the stroke within the range of 0 to -5mm on the piston rod return side(IN).
Loosen the hexagon head bolt for adjustment.
After adjustment, completely tighten the hexagon head bolt and apply a stopper to it.

② Never use the cylinder without a damper bolt.

Ambient atmosphere

① Use the cylinder as little as possible in ambient atmospheres where the cylinder is exposed to water (hot water) or coolant.
When it is inevitable to use it in such atmospheres, protect the cylinder with a cover.

② Some atmospheres or fluids are harmful to the main body of the cylinder or packing.
Please contact us when special use is desired.

Disassembly and maintenance

① Remove the plate at the end for disassembling.
Disassembling is permitted only for replacement of packing or other necessary operations to prevent malfunction.

②. Please contact us for the method of dissembly or ressembly, or refer to the manual for disassembly.

Contruction/Parts List, Packing List

ADRM(Slide Bearing)

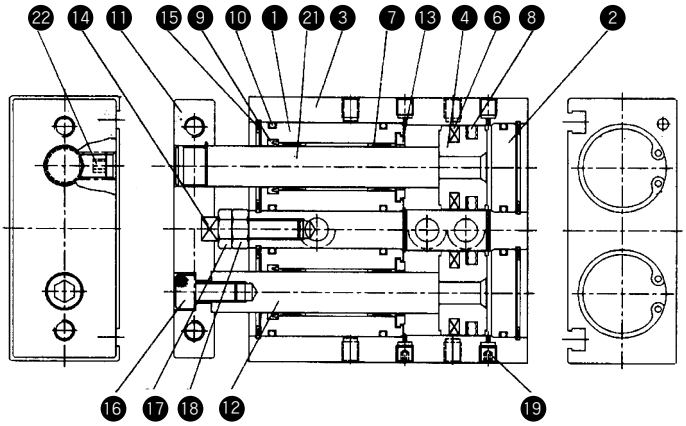

ADRL(Ball Bush Bearing)

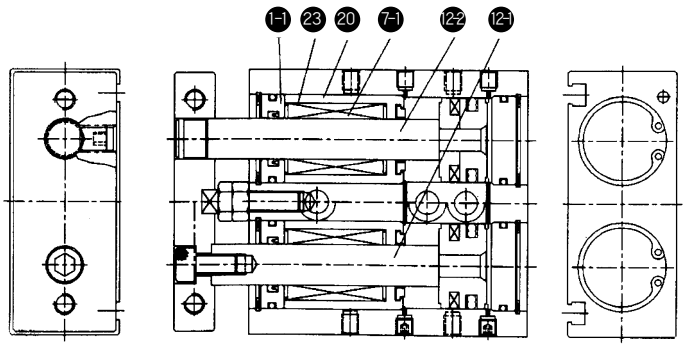

Slide Bush Type

No.	Description	Material
❶	Rod cover	-
❷	Head cover	-
❸	Cylinder Tube	-
❹	Piston	-
❻	Magnet	Ba-Ferrite+NBR
❼	Slide Bush	NBR
❽	Piston Packing	NBR
❾	Rod Packing	NBR
❿	Tube Gasket	NBR
⓫	Plate	-

No.	Description	Material
⓬	Piston Rod	-
⓭	Bumper-A	Urethane
⓮	Bumper-B	Urethane
⓯	Snap Ring	-
⓰	Plate Bolt	-
⓱	Stroke Control Bolt	-
⓲	Stroke Control Nut	-
⓳	Plug	-
㉑	Piston Rod-A	-
㉒	Detent Screw	-

Ball Bush Type

No.	Description	Material
1-1	Rod cover	-
7-1	Ball Bearing	-
12-1	Piston Rod	SUJ2

No.	Description	Material
12-2	Piston Rod-A	SUJ2
⓴	Bearing Stopper	-
㉓	Gasket	NBR

Dimensions

ADR ø 10

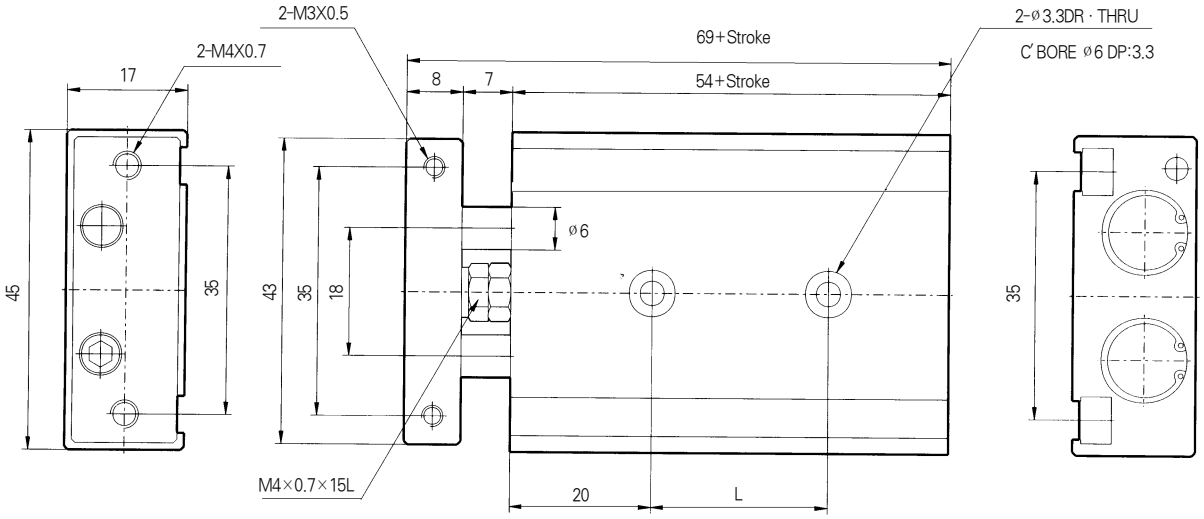

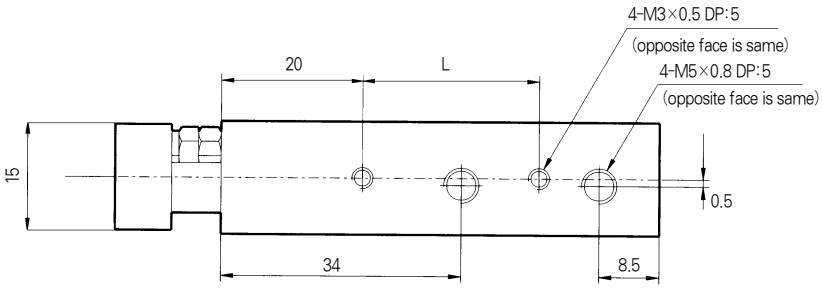

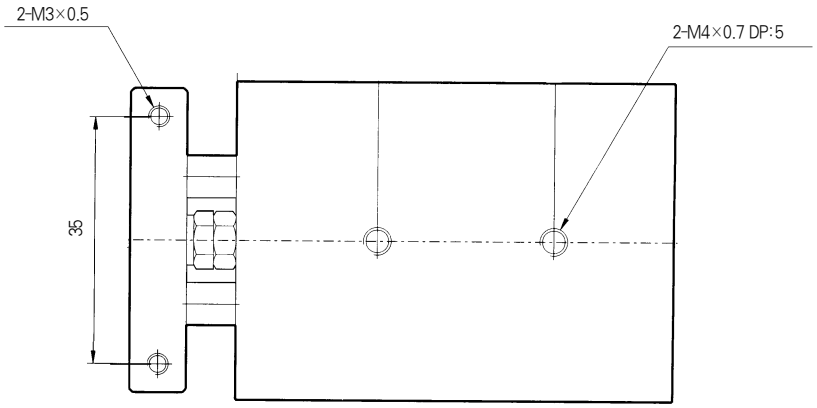

(mm)

Stroke (mm)	10	15	20	25	30
L	25	30	30	30	40

Dimensions

ADR ø16

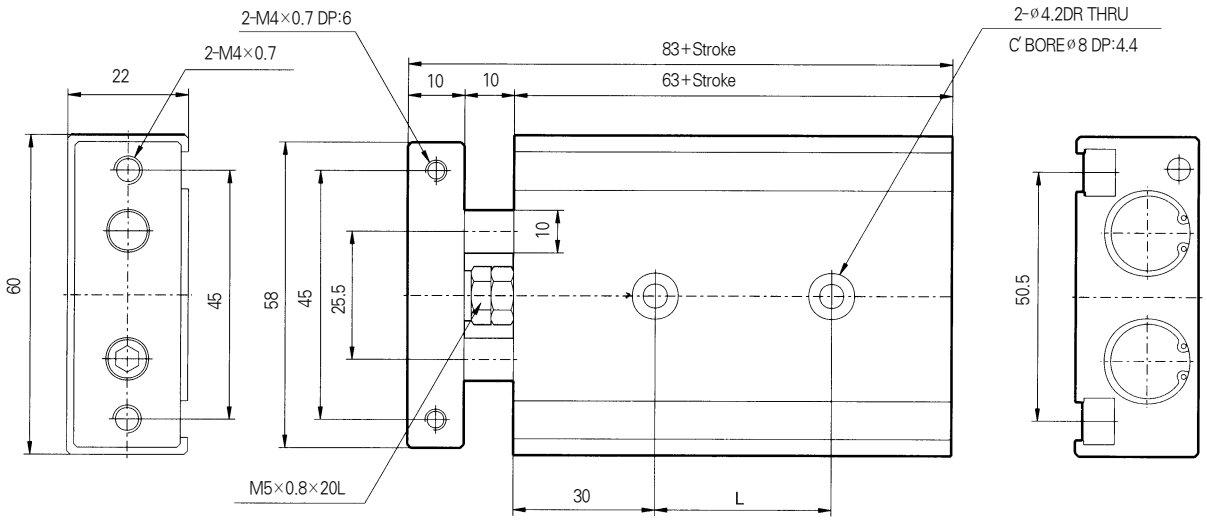

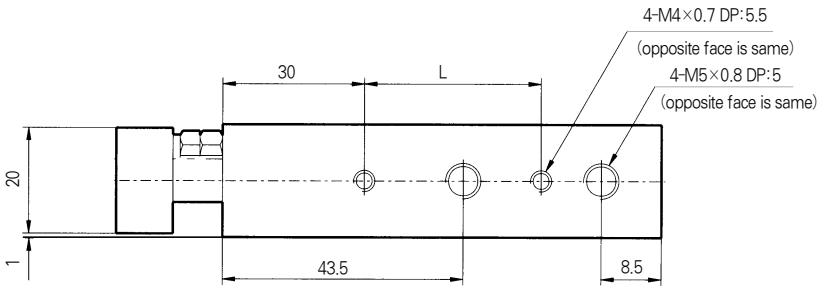

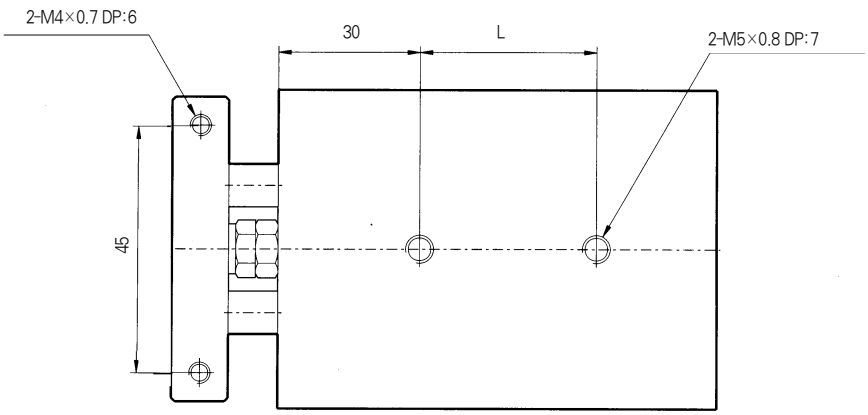

(mm)

Stroke (mm)	10	15	20	25	30	35	40	45	50
L	25	25	25	25	40	40	40	40	40

Dimensions

ADR ø20

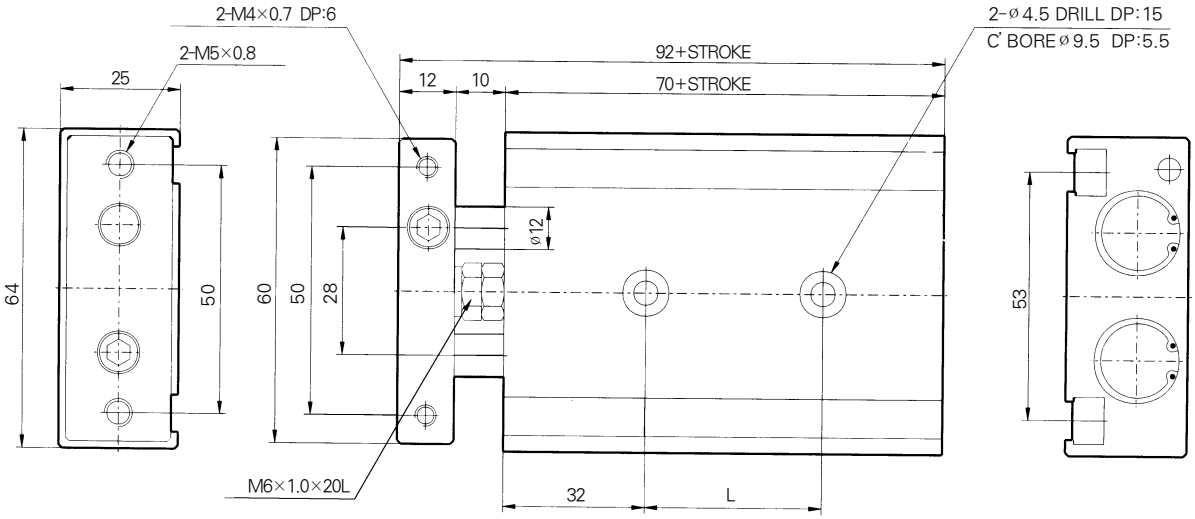

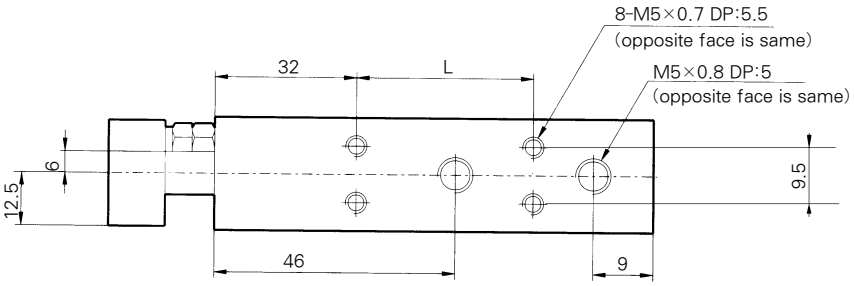

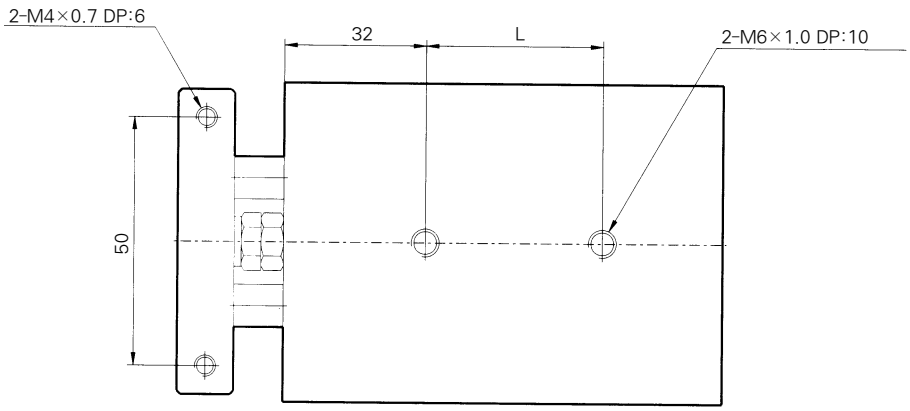

Stroke	10	15	20	25	30	35	40	45	50
L	30	30	30	30	40	40	40	40	40

Dimensions

ADR ø25

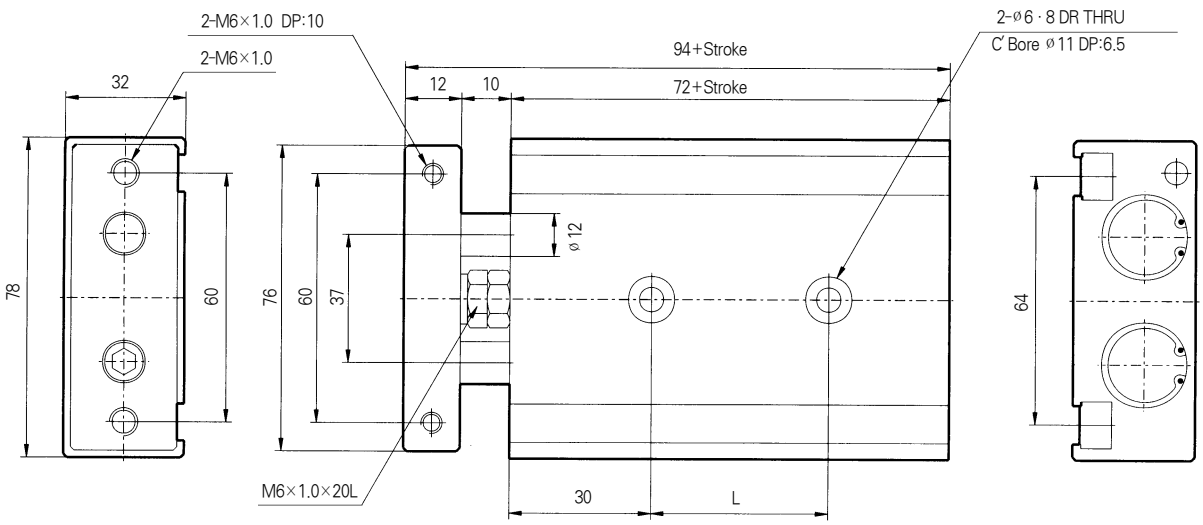

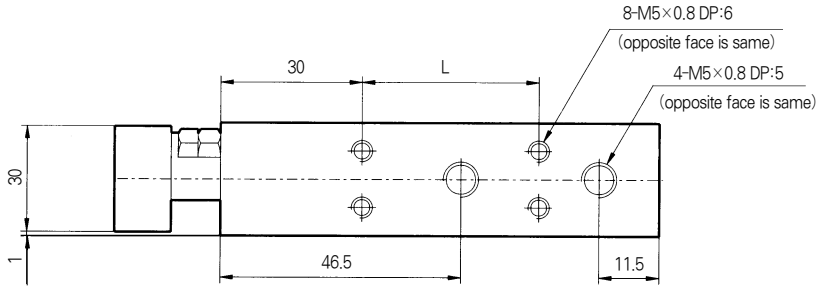

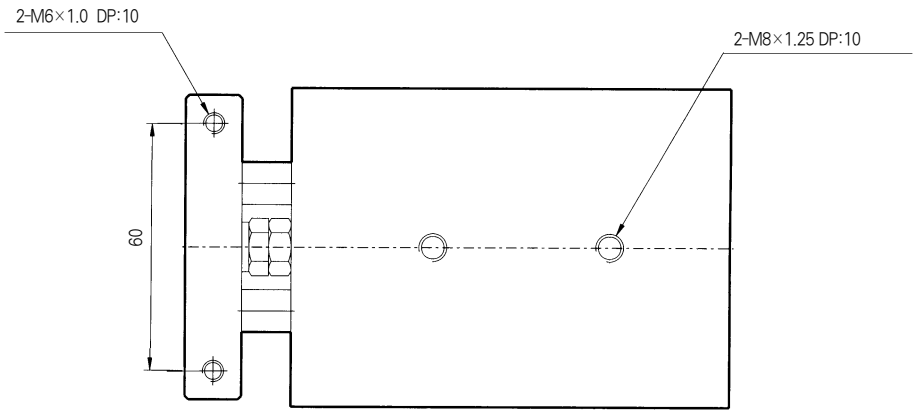

(mm)

Stroke (mm)	10	15	20	25	30	35	40	45	50	55	60	65	70	75	80
L	30	30	30	30	40	40	40	40	40	60	60	60	60	60	80

Auto Switch Specifications

Auto Switch No.	W1H□	W13□
Type	Solid State Switch	Reed Switch
Application	Relay, Sequence Control	
Wiring Method	3 Wire System	2 Wire System
Power Source	DC10~28V	–
Load Voltage	DC28V Less	DC24V, AC110V
Current Consumption	100mA Less	DC24V : 5~40mA AC110V : 5~20mA
Internal Voltage Drop	100mA~0.5V Less	40mA~2.4V Less
Leakage Current	DC24V~10μA Less	
Load Current	OFF: 5mA or Less ON : 35mA or Less	–

- Operating Time : Max. 1ms
- Lead Wire : Oil resistant vinyl cord. ø0.13, 0.2mm², 3 cores(red white, black), cores(red, black), 0.5m long
- Shock Resistance : 1000m/S² (102G)
- Insulation Resistance : 50MΩ or more under the test voltage 500V DC between case and cable.
- Withstand Voltage : 1000VAC for 1min.(between lead wire and the case)
- Ambient Temperature : -10~60℃
- Protection Structure : IEC Standard, watertight and oil resising structure

※ "L" is added to the end when the lead is 3m long.
(ex) W1□L

Auto Switch Internal Circuit

W1H□

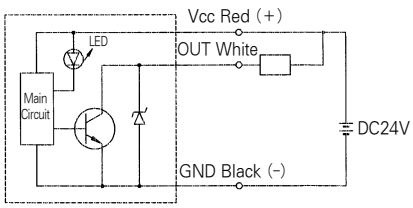

W13□

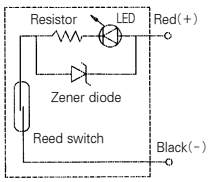

Auto Switch Dimensions (mm)

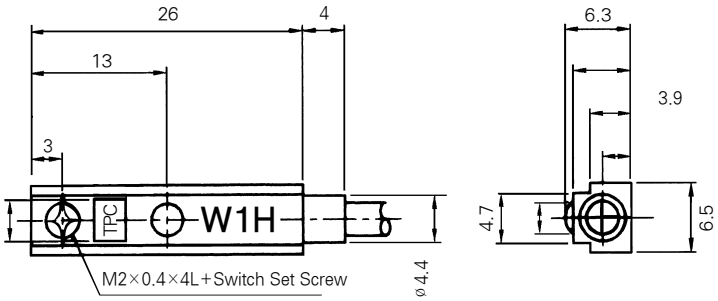

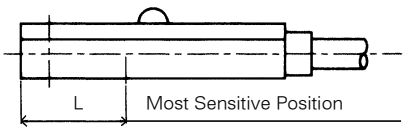

(mm)

Stations	W1H□	W13□
L	10	15
Operating Range	4~10	4~10

Series AMR

Magnet Type Rodless Cylinder

Bore size(mm) : ø10, ø16, ø20, ø25, ø32, ø40

- PRECISION STAINLESS BODY FOR SMOOTH ACTUATION
- LIGHT WEIGHT
- COMPACT DESIGN
- LEAK FREE
- NON - LUBRICATED STANDARD
- POSITION SENSING CAPABLE

How to Order

AMR G H 10 — 50 — W13 — ○

1 2 3 4 5 6 7

1 Magnet Type Rodless Cylinder

2 Type of Bearing
B : Basic Type(Standard)
G : With Guide Type(Auto Switch Capable Cylinder)

3 Magnet Holding Power

Dia	H	L
ø10	5.5	-
ø16	12	-
ø20	24	15.7
ø25	37	22.5
ø32	60	36.5
ø40	94	58

4 Bore Size(mm)
10: ø10
16: ø16
20: ø20
25: ø25
32: ø32
40: ø40

5 Stroke(mm)

AMRB		AMRG	
ø10	50~300mm	ø10	50~500mm
ø16	50~300mm	ø16	50~700mm
ø20	100~800mm	ø20	100~1,000mm
ø25	100~800mm	ø25	100~1,500mm
ø32	100~800mm	ø32	100~1,500mm
ø40	100~1,000mm	ø40	100~1,500mm

6 Applicable Auto Switch (SeriesW1□)
(AMRG only)
Blank : Without Auto Switch
W13 : Reed Switch Type
(DC24V, AC110V)
W1H : Solid State Type(DC 24V)

Standard Auto Switch
Lead wire Length in 1m.
3m Leads available on all models by adding a "L" suffix to the part number.

7 Additional Symbol of Auto Switch
Blank : 2 pcs.
S : 1 pc .
n : n pcs.

Specificatios

1MPa=10.1972kgf/cm²

Fluid	Air	
Proof pressure	10.5kgf/cm²{1.03MPa}	
Max. operating pressure	7kgf/cm²{0.7MPa}	
Min. operating pressure	2kgf/cm²{0.2MPa}	
Ambient and fluid temperature	5~60℃)	
Operating piston speed	150 ~ 400 mm/s	
Cushion	Rubber Cushion at Both Sides	
Lubrication	Non-lube	
Cushion	AMRB10, AMRB16	Rubber cushion
	AMRB20, AMRB25	Air cushion
	AMRB32, AMRB40	
	AMRG10, AMRG16, AMRG20	Rubber cushion
	AMRB25, AMRG32, AMRG40	

Cylinder Theoretical Output

Ø10

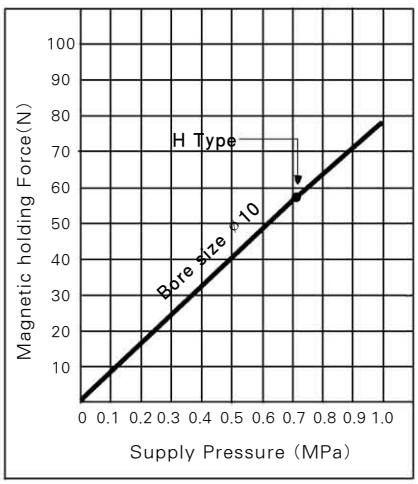

Ø16, Ø20, Ø25, Ø32, Ø40

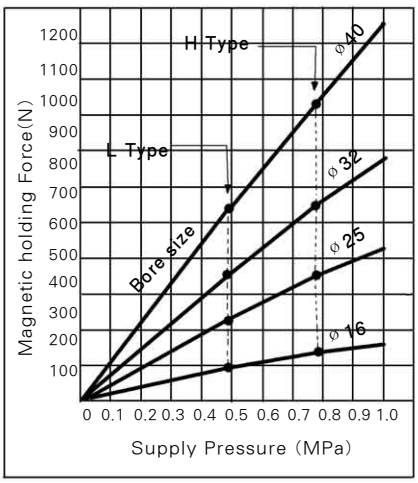

Weight Table

kg

Number of magnets \ Bore size		Ø10	Ø16	Ø25	Ø32	Ø40
Basic weight	AMRBH	0.08	0.28	0.71	1.34	2.15
	AMRBL	0.22	0.62	1.19	1.97	3.1
Additional weight per 50 stroke		0.014	0.02	0.05	0.07	0.08

Calculation method/Example:AMRB32-0400

Basic weight ····· 1.34kg
Additional weight ··· 0.07/50s
Cylinder stroke ····· 500st

1.34+0.07×20÷2=2.04kg

Main Parts

Description	Material	Note
Head cover	Aluminium alloy	Colored hard alumite
Cylinder tube	Stainless steel	
Body	Aluminium alloy	Colored hard alumite
Magnet	Rare earth magnet	

Basic Type:Construction/Parts List

AMRBH Ø10, Ø16

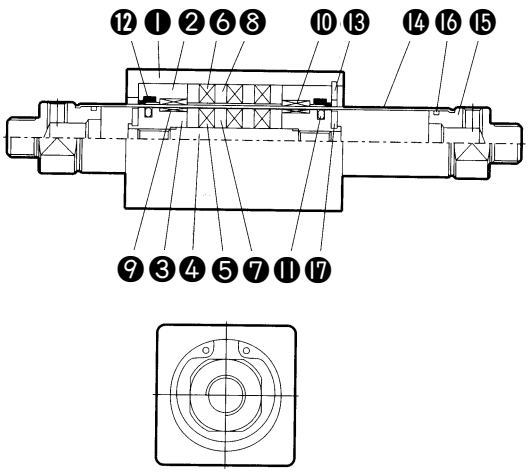

No.	Description	Material	Note
❶	Slider	Aluminum alloy	
❷	Holder	Aluminum alloy	
❸	Piston	Aluminum alloy	
❹	Shaft	Stainless steel	
❺	Inner Magnet	-	
❻	Outer Magnet	-	
❼	Inner Yoke	Carbon steel	
❽	Outer Yoke	Carbon steel	
❾	Inner Wearing	Resin	
❿	Outer Wearing	Resin	
⓫	Piston Packing	NBR	
⓬	Wiper Ring	NBR	
⓭	Snap Ring	Spring	
⓮	CylinderTube	Stainless steel	
⓯	End Cover	Aluminum alloy	
⓰	Tube Gasket	NBR	
⓱	Bumper	Urethane	

AMRBH Ø20, Ø25, Ø32, Ø40

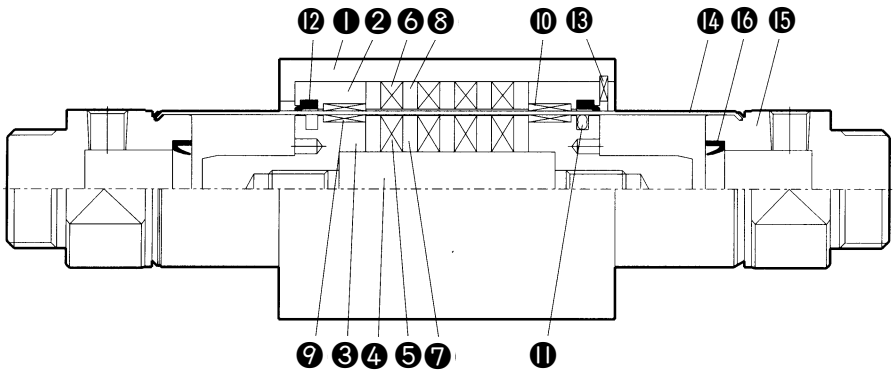

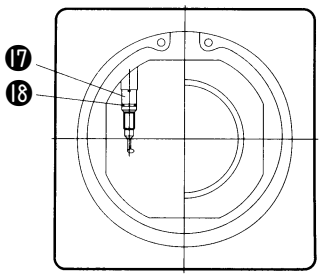

No.	Description	Material	Note
❶	Slider	Aluminum alloy	
❷	Holder	Aluminum alloy	
❸	Piston	Aluminum alloy	
❹	Shaft	Stainless steel	
❺	Inner Magnet	-	
❻	Outer Magnet	-	
❼	Inner Yoke	Carbon steel	
❽	Outer Yoke	Carbon steel	
❾	Inner Wearing	Resin	
❿	Outer Wearing	Resin	
⓫	Piston Packing	NBR	
⓬	Wiper Ring	NBR	

No.	Description	Material	Note
⓭	Snap Ring	Spring steel	
⓮	CylinderTube	Stainless steel	
⓯	End Cover	Aluminum alloy	
⓰	Cushion Packing	NBA	
⓱	Cushion Valve	Carbon steel	
⓲	Cushion Valve O-Ring	NBA	

Basic Type : Construction/Parts List

AMRBL 20, 25, 32, 40

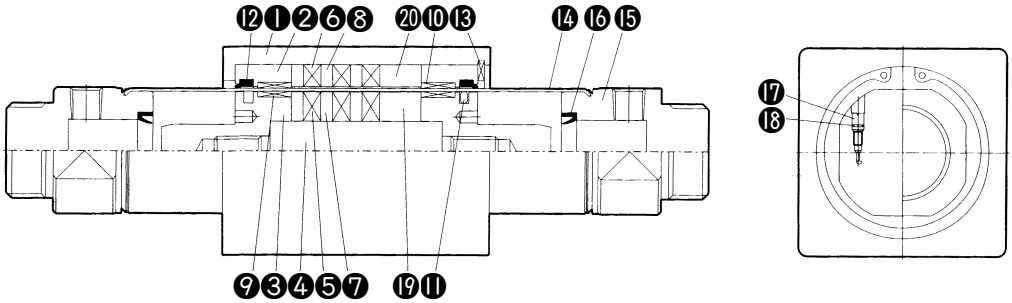

No.	Description	Material	Note
❶	Slider	Aluminum alloy	
❷	Holder	Aluminum alloy	
❸	Piston	Aluminum alloy	
❹	Shaft	Stainless steel	
❺	Inner Magnet	-	
❻	Outer Magnet	-	
❼	Inner Yoke	Carbon steel	
❽	Outer Yoke	Carbon steel	
❾	Inner Wearing	Resin	
❿	Outer Wearing	Resin	
⓫	Piston Packing	NBR	
⓬	Wiper Ring	NBR	

No.	Description	Material	Note
⓭	Snap Ring	Spring steel	
⓮	CylinderTube	Stainless steel	
⓯	End Cover	Aluminum alloy	
⓰	Cushion Packing	NBR	
⓱	Cushion Valve	Carbon steel	
⓲	Cushion Valve O-Ring	NBR	
⓳	Inner Spacer	Aluminum alloy	
⓴	Outer Spacer	Aluminum alloy	

Guide Type:Construction/Part List

AMRGH ø 10, ø 16,

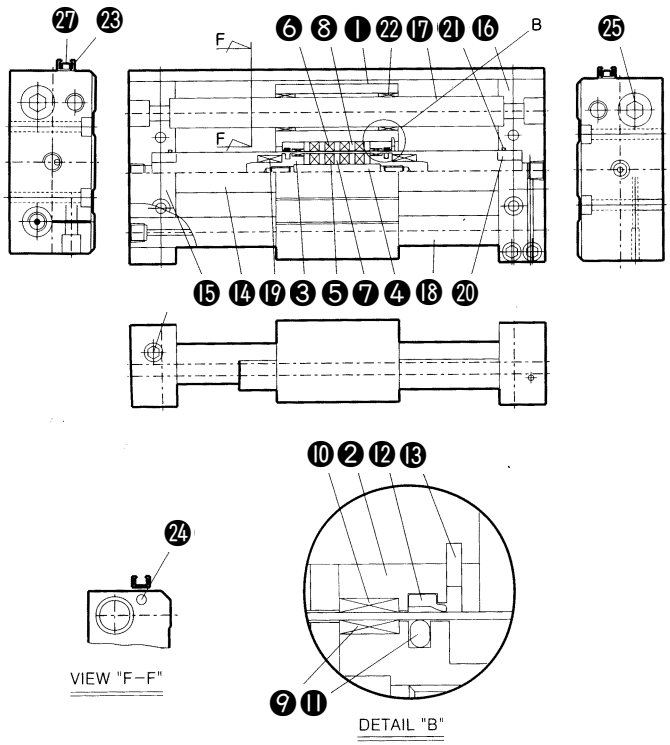

No.	Description	Material	Note
❶	Slider	Aluminum alloy	
❷	Holder	Aluminum alloy	
❸	Piston	Aluminum alloy	
❹	Shaft	Stainless steel	
❺	Inner Magnet	-	
❻	Outer Magnet	-	
❼	Inner Yoke	Carbon Steel	
❽	Outer Yoke	Carbon Steel	
❾	Inner Wearing	Resin	
❿	Outer Wearing	Resin	
⓫	Piston Packing	NBR	
⓬	Wiper Ring	NBR	
⓭	Snap Ring	Spring Steel	
⓮	CylinderTube	Stainless steel	
⓯	End Cover A	Aluminum alloy	
⓰	End Cover B	Aluminum alloy	
⓱	Guide Rod A	Carbon Steel	
⓲	Guide Rod B	Carbon Steel	
⓳	Bumper	Urethane	
⓴	Cushion Stopper	Aluminum alloy	
㉑	Cyl' Tube Gasket	NBR	
㉒	Guide Bush	PBC3	
㉓	S/W Holder	Aluminum alloy	
㉔	S/W Magnet	-	
㉕	Guide Rod Bolt A	Carbon Steel	
㉖	Guide Rod Bolt B	Carbon Steel	
㉗	S/W Holder Bolt	Carbon Steel	

Construction/Guide Type

AMRGH 20, 25, 32, 40

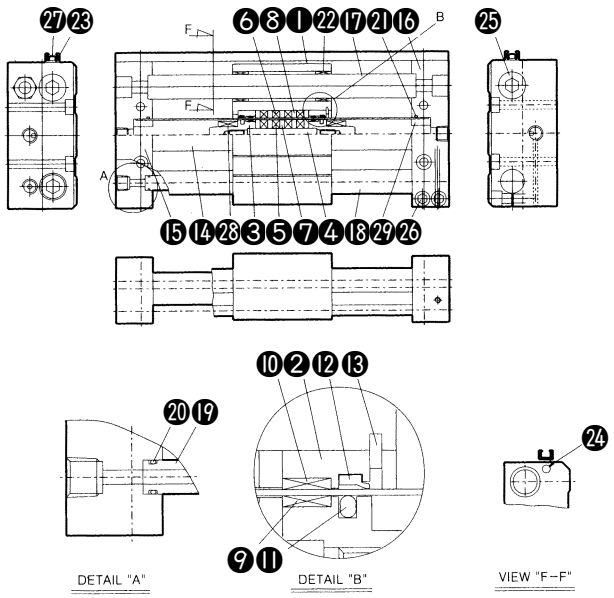

No.	Description	Material	Note
❶	Slider	Aluminum alloy	
❷	Holder	Aluminum alloy	
❸	Piston	Aluminum alloy	
❹	Shaft	Stainless steel	
❺	Inner Magnet	-	
❻	Outer Magnet	-	
❼	Inner Yoke	Carbon Steel	
❽	Outer Yoke	Carbon Steel	
❾	Inner Wearing	Resin	
❿	Outer Wearing	Resin	
⓫	Piston Packing	NBR	
⓬	Wiper Ring	NBR	
⓭	Snap Ring	Spring steel	
⓮	CylinderTube	Stainless steel	
⓯	End Cover A	Aluminum alloy	
⓰	End Cover B	Aluminum alloy	
⓱	Guide Rod A	Carbon Steel	
⓲	Guide Rod B	Carbon Steel	
⓳	Air Pipe	Carbon Steel	
⓴	Air Pipe O Ring	NBR	
㉑	Cyl' Tube O Ring	NBR	
㉒	Guide Bush	PBC3	
㉓	S/W Holder	Aluminum alloy	
㉔	S/W Magnet	-	
㉕	Guide Rod Bolt A	Carbon Steel	
㉖	Guide Rod Bolt B	Carbon Steel	
㉗	S/W Holder Bolt	Carbon Steel	
㉘	Bumper	Urethane	
㉙	Cushion Stopper	Aluminum alloy	

AMRGL 20, 25, 32, 40

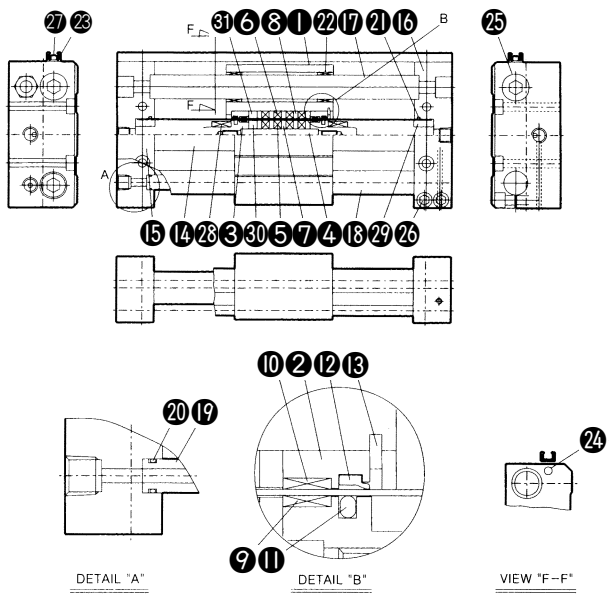

No.	Description	Material	Note
❶	Slider	Aluminum alloy	
❷	Holder	Aluminum alloy	
❸	Piston	Aluminum alloy	
❹	Shaft	Stainless steel	
❺	Inner Magnet	-	
❻	Outer Magnet	-	
❼	Inner Yoke	Carbon Steel	
❽	Outer Yoke	Carbon Steel	
❾	Inner Wearing	Resin	
❿	Outer Wearing	Resin	
⓫	Piston Packing	NBR	
⓬	Wiper Ring	NBR	
⓭	Snap Ring	Spring Steel	
⓮	CylinderTube	Stainless steel	
⓯	End Cover A	Aluminum alloy	
⓰	End Cover B	Aluminum alloy	
⓱	Guide Rod A	Carbon Steel	
⓲	Guide Rod B	Carbon Steel	
⓳	Air Pipe	Carbon Steel	
⓴	Air Pipe O Ring	NBR	
㉑	Cyl' Tube Gasket	NBR	
㉒	Guide Bush	PBC3	
㉓	S/W Holder	Aluminum alloy	
㉔	S/W Magnet	-	
㉕	Guide Rod Bolt A	Carbon Steel	
㉖	Guide Rod Bolt B	Carbon Steel	
㉗	S/W Holder Bolt	Carbon Steel	
㉘	Bumper	Urethane	
㉙	Cushion Stopper	Aluminum alloy	
㉚	Inner Spacer	Aluminum alloy	
㉛	Outer Spacer	Aluminum alloy	

Dimensions / Basic Type

AMRB ø10, ø16

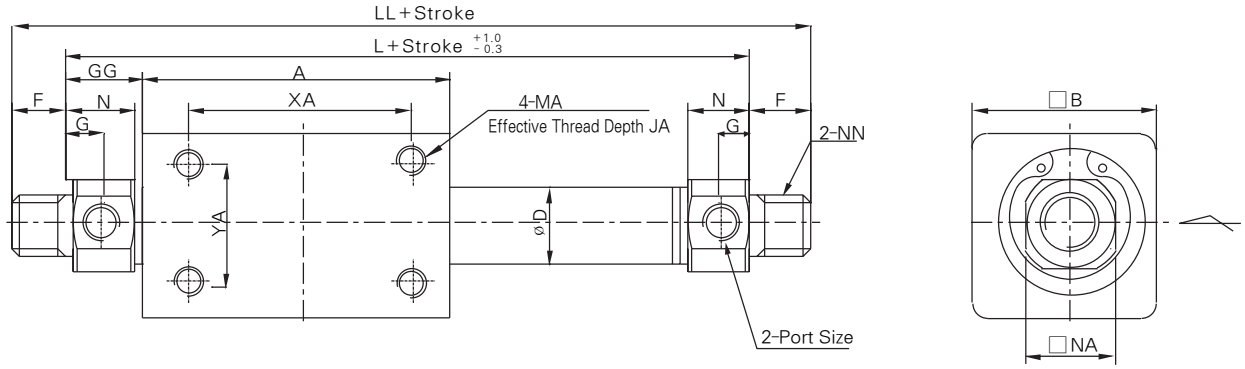

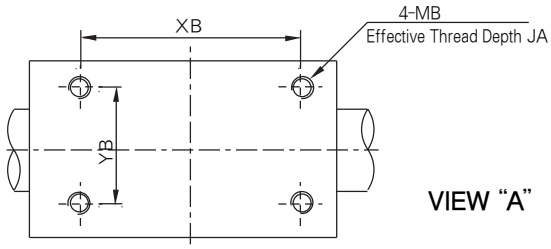

VIEW "A"

(mm)

Model	Stroke Range	Port Size	A	B	ø D	F	G	GG	JA	JB	L	LL	MA	MB	N	NA	NN	XA	YA	XB	YB
AMRB*10	~300	M5×0.8	42	25	11	8	4.5	10.5	4.5	4.5	63	79	M4×0.7	M3×0.5	9	12	M8×1.0	30	16	30	16
AMRB*16	~300	M5×0.8	55	35	17.4	8	4.5	14	5.5	5.5	83	99	M5×0.8	M4×0.7	9	18	M10×1.0	35	20	35	19

AMRB ø20, ø25, ø32, ø40

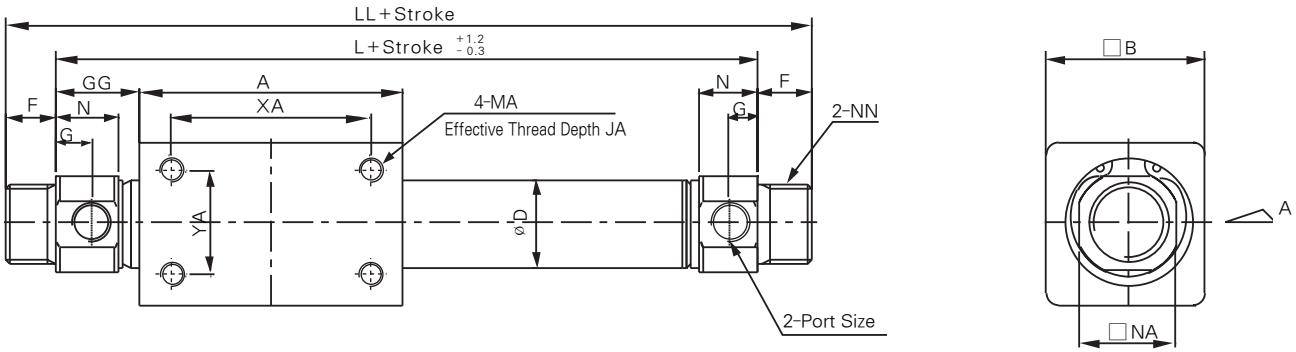

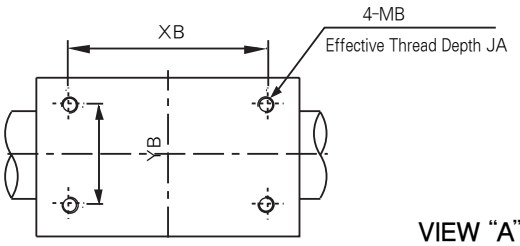

VIEW "A"

(mm)

Model	Stroke Range	Port Size	A	B	ø D	F	G	GG	JA	JB	L	LL	MA	MB	N	NA	NN	XA	YA	XB	YB
AMRB*20	~1,500	Rc 1/8	66	40	21.6	13	8	20	9	9	106	132	M6×1.0	M4×0.7	14.8	24	M20×1.5	50	26	50	25
AMRB*25	~1,500	Rc 1/8	75	50	26.6	13	8	18	9	9	111	137	M6×1.0	M5×0.8	14.8	30	M26×1.5	50	35	50	30
AMRB*32	~1,500	Rc 1/8	88	60	33.8	13	8	18	12	12	124	150	M8×1.25	M6×1.0	14.8	34.5	M26×1.5	60	40	50	40
AMRB*40	~1,500	Rc 1/4	91	70	42	16	11	29.5	11	11	150	182	M8×1.25	M6×1.0	21.3	42.5	M32×2.0	60	45	60	40

Guide/ Slider Bearing Type

AMRG ø10, ø16

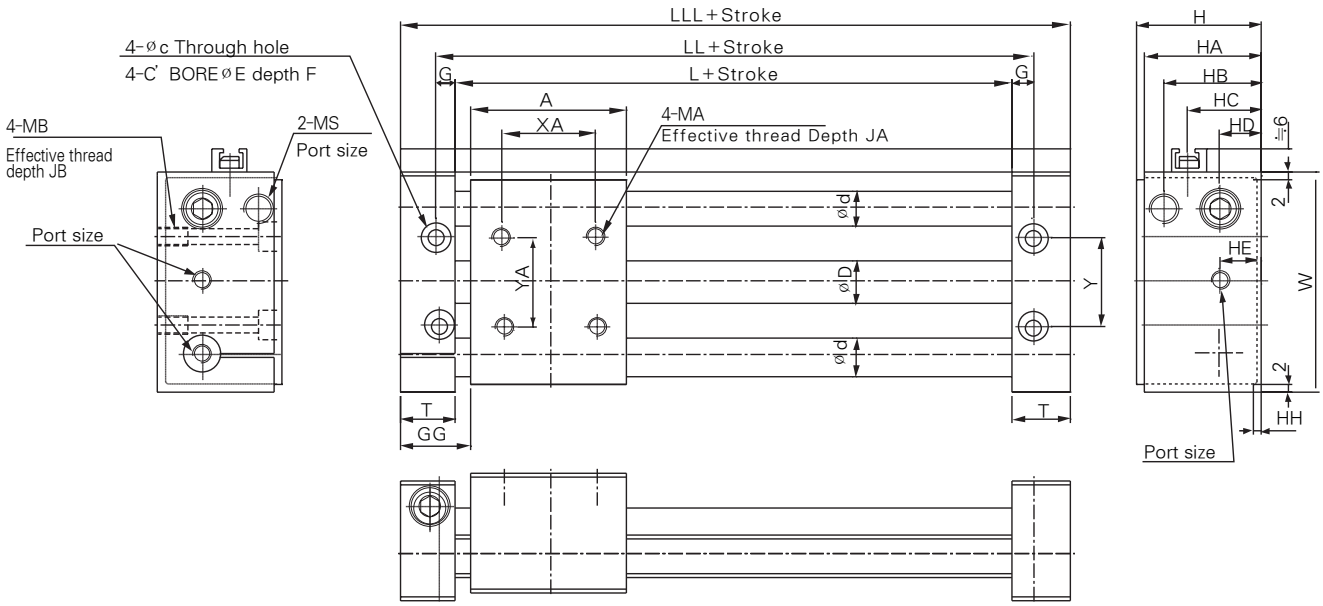

(mm)

Model	Stroke Range	Port Size	A	øC	øD	ød	øE	F	GG	G	H	HA	HB	HC	HD	HE	HH	JA	JB	L	LL	LLL	MA	MB	MS	T	W	XA	Y	YA
AMRG*10	~500	M5×0.8	42	4.3	11	10	8	5	19	5	34	32	27	20	12	12	2	10	8	50	60	80	M5×0.8	M5×0.8	M8×1.0	15	60	25	24	25
AMRG*16	~700	M5×0.8	55	5.2	17.4	10	10	7	23	7	40	38	30	24	15	15	2	12	10	61	75	101	M5×0.8	M8×1.0	M8×1.0	20	75	30	30	30

AMRG ø20, ø25, ø32, ø40

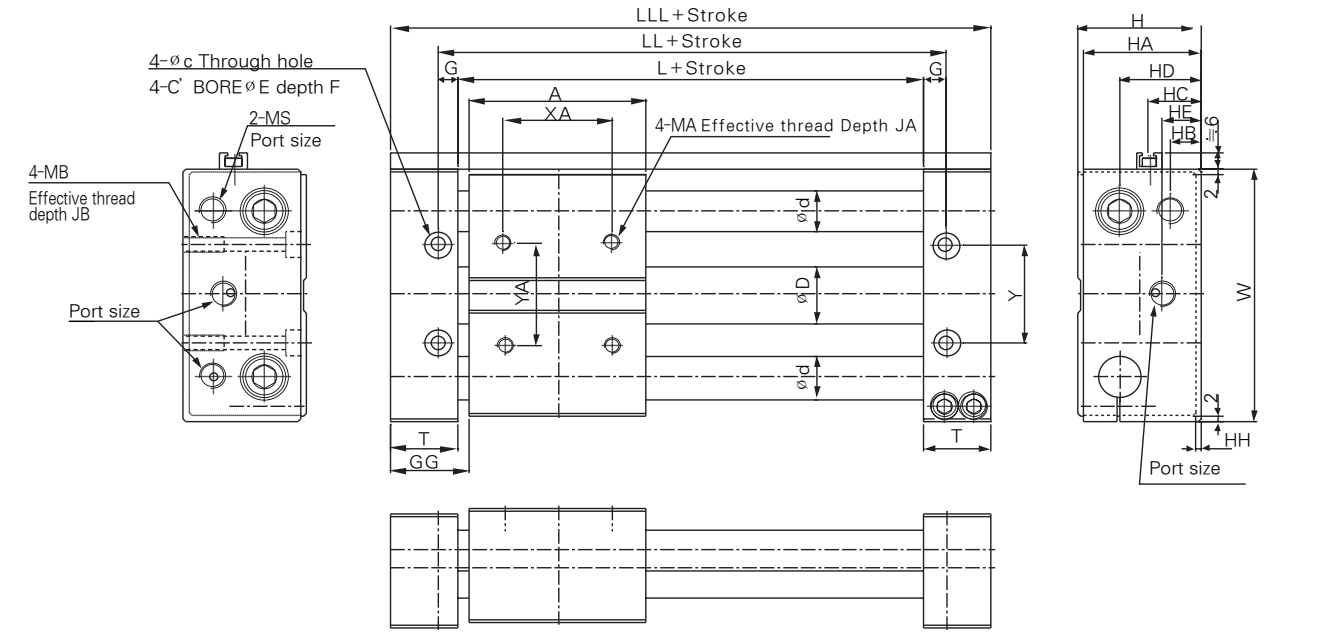

(mm)

Model	Stroke Range	Port Size	A	øC	øD	ød	øE	F	GG	G	H	HA	HB	HC	HD	HE	HH	JA	JB	L	LL	LLL	MA	MB	MS	T	W	XA	Y	YA
AMRG*20	~1,000	Rc 1/8	66	5.2	21.6	16	10	6	29	8	46	44	11	19	30	14.5	2	8	15	74	90	124	M6×1.0	M6×1.0	M10×1.0	25	98	40	38	40
AMRG*25	~1,500	Rc 1/8	74	6.8	26.6	16	11	7	25	8	54	52	15	23	34	18.5	2	8	16	74	90	124	M6×1.0	M8×1.25	M14×1.5	25	102	40	42	40
AMRG*32	~1,500	Rc 1/8	88	8.6	33.8	20	14	8.6	29	10	64	62	19.5	29.5	42.5	19	4	12	16	90	110	146	M8×1.25	M10×1.5	M20×1.5	28	122	50	50	50
AMRG*40	~1,500	Rc 1/4	91	8.6	42	25	14	8.6	34.5	10	74	72	20	34.5	47.5	20	4	12	14	100	120	160	M8×1.25	M10×1.5	M20×1.5	30	145	64	64	64

Specifications

Auto Switch Specifications

Auto Switch No.	W1H□	W13□
Type	Solid State Switch	Reed Switch
Application	Relay, Sequence Control	
Wiring Method	3 Wire System	2 Wire System
Power Source	DC10~28V	–
Load Voltage	DC28V Less	DC24V, AC110V
Current Consumption	100mA Less	DC24V : 5~40mA AC110V : 5~20mA
Internal Voltage Drop	100mA~0.5V Less	40mA~2.4V Less
Leakage Current	DC24V~10μA Less	
Load Current	OFF: 5mA or Less ON : 35mA or Less	–

- Operating Time : Max. 1ms
- Lead Wire : Oil resistant vinyl cord. ø0.13, 0.2mm², 3 cores(red white, black), cores(red, black), 0.5m
- Shock Resistance : 1000m/S² (102G)
- Insulation Resistance : 50MΩ or more under the test voltage 500V DC between case and cable.
- Withstand Voltage : 1000VAC for 1min.(between lead wire and case)
- Ambient Temperature : -10~60℃.
- Protection Structure : IEC Standard, watertight and oil resisting structure

※ "L" is added to the end when the lead is 3m long.
(ex) W1□L

Auto Switch Internal Circuit

W1H□

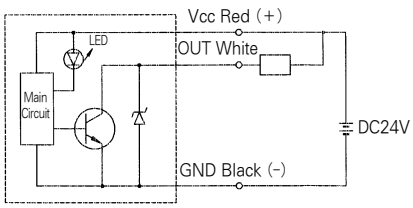

W13□

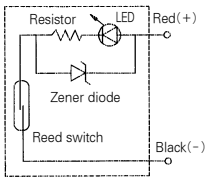

Auto Switch Dimensions (mm)

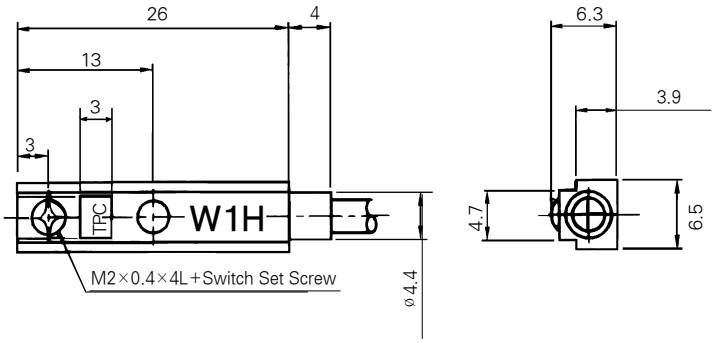

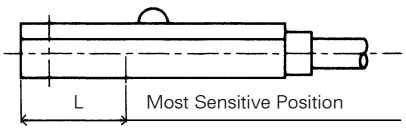

(mm)

Stations	W1H□	W13□
L	10	15
Operating Range	4~10	4~10

Stopper Cylinder for transfer work suspension from the automatic transfer system

Stopper Cylinder

This cylinder is useful when transfer suspension is needed between pallet or product movement in an automatic conveyer.

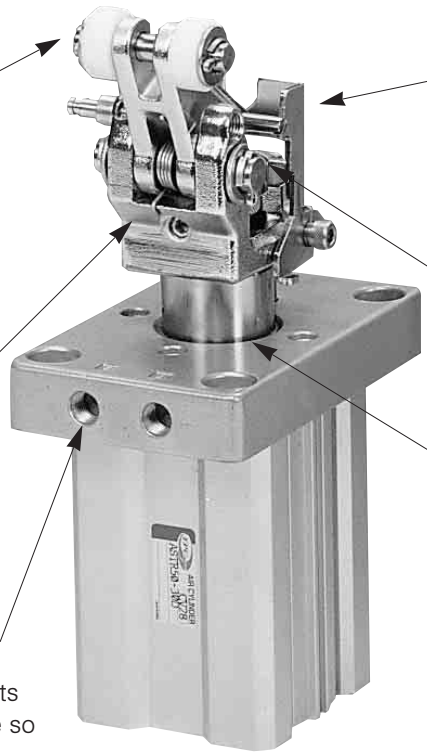

④ The roller material is of a plastic (MC Nylon) and rolled steel material which results in a superior durability and resistance from abrasion. → roller lever size is two fold : ø50 → middle size ; ø63, ø80 → large size

③ Repair of shover, easy inspection / easy adjustment of shover road administration / prevents any trouble due to shover eccentricity.

⑤ Throughout all the series of ø50, ø63, ø80, the A, B ports are located on the flange side so that it is clean during air exhaustion. → ordering style

① Lock device (When stopping the pallet): The function is exceptionally good (precise), and the structure is simple → making an application for utilizing the product.

② Lock device (When passing the pallet): The operating method is simple, and there is less trouble for damage or loss.

⑥ The interior horizontal weight is large → The interior horizontal weight is superior with 2~3 times enlargement on the contact area of the Bush and Piston-Rod compared to other products.

ⓐ There is no need to release the lever bunch, just loosen the shover stop screw for easy repair and inspection of the shover.

ⓑ Since there are two shover stop screws, you can prevent the shover eccentricity.

ⓒ Also, there is easy adjustment of shover load administration, for exact suction energy → making an application for utilizing the product.

⑦ In the ROD and PISTON selection method, we choose the loking type so that it is more stronger to stand up to shock and vibration than the screw method.

⑧ The exterior is elegant due to the use of aluminum use on the ROD COVER or BODY.

⑨ Magnets are installed

⑩ In the case of a V/V attachment, a 5 port V/V is a standard. Therefore it is easy to move the single cylinder to the double cylinder.

Series AST

Stopper Cylinder

Bore Size : ø50, ø63, ø80

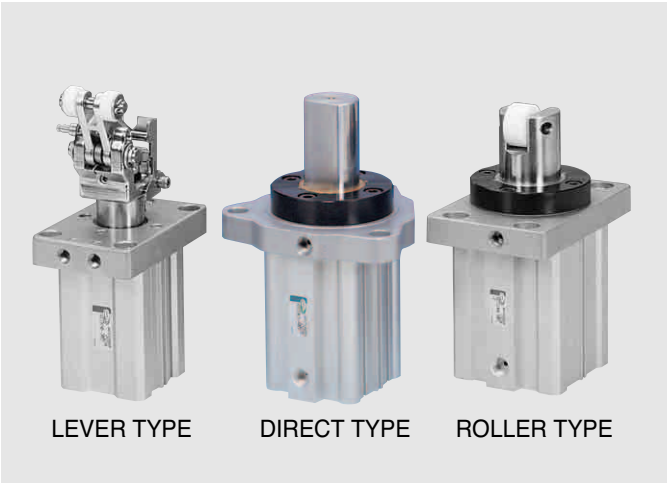

- It is possible to change the rotation 90 degrees each to 4 directions
- The shock Absorber is installed for easy preservation
- Single type, double type, double type (Spring installed)
- The roller is highly stiffened
- There is an auto switch attachment function

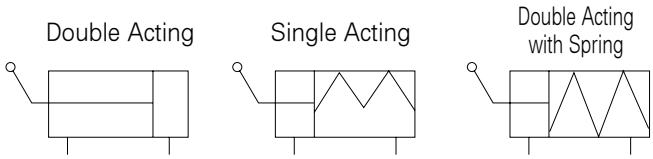

How to Order

A ST LA 50 — 30 D M — P V1 — A73K S

1 2 3 4 5 6 7 8 9 10 11

1 Actuator

2 Stopper Cylinder

3 Model (Refer to Page A-250)

Lever Type LA : Over Sized Rod 50
LB : Over Sized Rod 50
LC : Standard 63, 80
LD : Over Sized Rod 63, 80
LX : Over Sized Rod 50
Roller Type R
Direct Type D

4 Bore Size

50 : 50mm
63 : 63mm
80 : 80mm

5 Stroke

50 : 20, 25. 30, 40
63 : 30, 40
80 : 30, 40

6 Action

Blank : Single Acting
D : Double Acting
Z : Double Acting with Spring

7 Roller

Blank : Material(MC Nylon)
M : Rolled steel(SPA material)

8 Lever Lock

Blank : without
S : Pallet Stop
P : Pallet Pass
SP : Pallet Stop, Pass

9 Valve Attachment(※Option)

Blank : Without
V : Flange A,B port
V1 : AC 110V
V2 : AC 220V
V5 : DC 24V
주) ø50 : "V" Type Standard

10 Type of Auto Switch

Blank : Without Auto Switch
A73K : existing plug Point Auto Switch
W3H/W3V : existing Plug Point round auto switch (horizontal Type/vertical Type)
W4H/W4V : non Plug Point round auto switch (horizontal Type / vertical Type)

Caution)

1. According to the lead line direction of the existing plug point or non plug point auto switch, it is separated into horizontal/vertical types.
2. When the lead line length is 3m add an L to the end number of the product.
   ex) W3H: W3HL
3. A73K, W3H(V):Multiple use of DC24V, AC110V / Multiple use of W4H(V):DC24V

11 Auto Switch

Blank : 2pcs.
S : 1pc.

LEVER TYPE

DIRECT TYPE

ROLLER TYPE

Specifications

Acting	Double Acting, Single Acting, Double Acting with Spring
Fluid	Air
Proof pressure	15kgf/cm²(1.5MPa)
Max. Operating Pressure	10kgf/cm²(1MPa)
Min. Operating Pressure	Double Acting:1kgf/cm²
	Single Acting:1kgf/cm²
Ambient and Fluid Temperature	-5℃ ~ 60℃
Lubrication	Not Reguired
Cushion	Rubber Cushion
Stroke Length Tolerance	$^{+1.4}_{0}$
Mounting type	Through hole (standard), Both ends tapped
Auto Switch	Attachable
Type	Lever Type, Roller Type, Direct Type

Standand Stroke

Bore Size	Standand Stroke(mm)
ø50	20, 25, 30, 40
ø63, ø80	30, 40

Rod High Rigid

Tube Bore Size(mm)	ROD Size(mm)
ø50	32
ø63	40
ø80	50

Traverse Load and Operating Pressure

Pressure(kgf/cm²) / Bore Size((mm)	1.2	2	3	4	5	6	7
ø50	5	30	40	70	95	120	150
ø63	15	40	75	120	150	180	225
ø80	20	60	110	160	200	240	280

Lever Type(Shock-Absorber) Load Weight

Bore Size	Model	Damper Constant		Conveyer Speed (m/min)
		-1	-2	
ø50	MCS2212B-*	75~400kgf	25~200kgf	5~40
ø63, ø80	MCS2212A-*	160~600kgf	75~400kgf	

Stopper Cylinder Selection Process

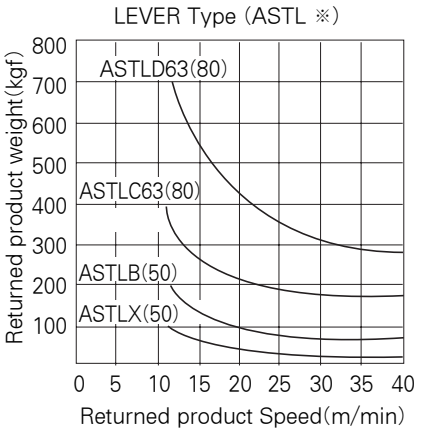

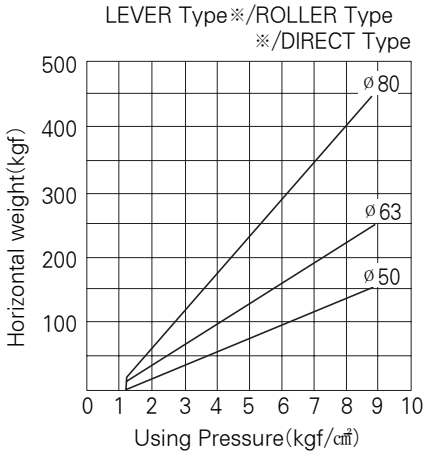

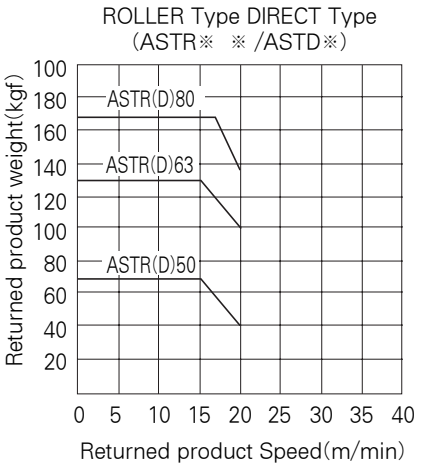

STOPPER CYLINDER Selection Process

1. From the crossing point of the maximum weight of the returned product and speed we select the size of the cylinder and damper model.
2. Through the friction calculation of the conveyer roller and pallet we bring out the constant horizontal weight.
   (Constant horizontal weight=Returned product weight × Friction calculation)
3. Set up the user pressure and select the cylinder size.

Application example)

※ Condition used = Conveyer speed:14m/min, Returned product total weight : 230kgf, Pressure used : 5kgf/㎠, Friction calculation number : 0.1)

※ Selection method

- Select the damper model and cylinder size
  LB(strong type) damper, 50 size cylinder
- Find the constant horizontal weight
  Returned product weight × Friction calculation number = 230kgf×0.1=23(kgf)
  The 50Size cylinder is selected on the crossing point of the pressure used at 5kgf/cm^2, and at the constant horizontal weight of 23kgf

Construction / Parts List

ø50(Double Acting: ※D)

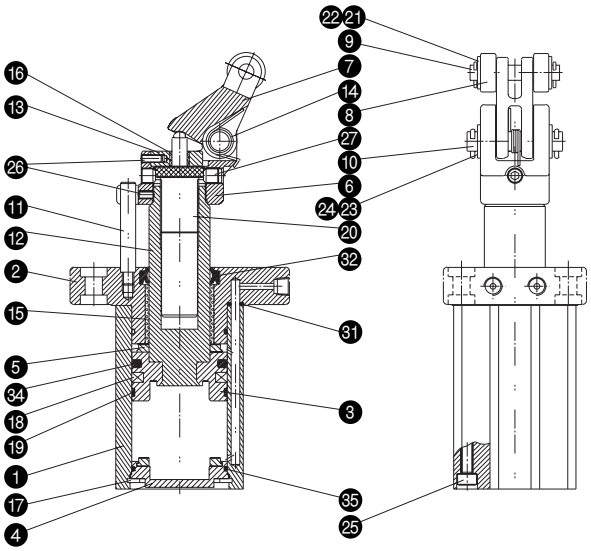

ø63, 80(Double Acting: ※D)

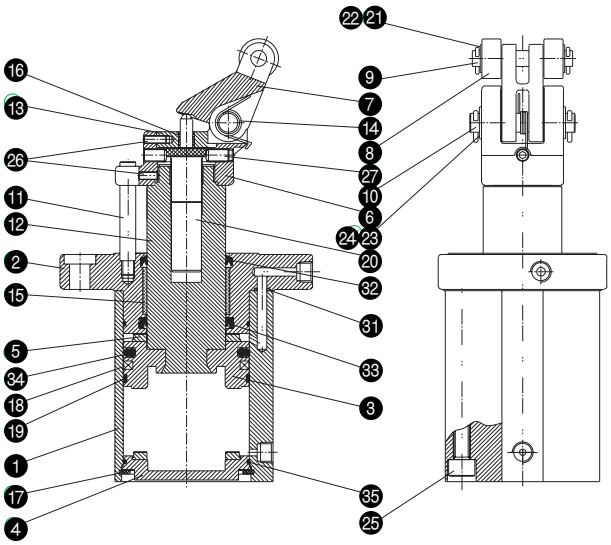

■ Single Acting: ※T
■ Double Acting: ※Z ■ V/V Type: ※Z-V※
Built-in spring

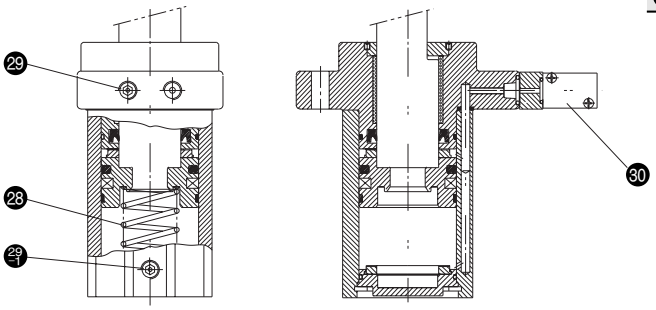

Parts List

NO.	Description	Material	Qty	Note.
1	TUBE	Aluminum alloy	1	
2	ROD COVER	Aluminum alloy	1	
3	PISTON	Aluminum alloy	1	
4	HEAD COVER	Aluminum alloy	1	
5	BUMPER	Urethane	2	Head, Rod
6	HOLDER	Carbon steel	1	
7	LEVER	Carbon steel	1	
8	ROLLER	MC Nylon	2	
9	ROLLER PIN	Carbon steel	1	
10	LEVER PIN	Carbon steel	1	
11	GUIDE ROD	Carbon steel	1	
12	PISTON ROD	Carbon steel	1	
13	LEVER STOPPER	Rolled steel	1	
14	LEVER SPRING	Stainless steel	1	
15	BUSH	Lead bronze	1	
16	BUSH	Lead bronze	1	
17	C SNAP RING	Spring steel	1	
18	MAGNET RING	NBR	1	
19	WEARING	Resin	1	
20	SHOCK ABSORBER	-	1	
21	SPLIT PIN	Wrought steel	2	
22	WASHER	rolled steel	2	
23	SPLIT PIN	Wrought steel	2	
24	WASHER	rolled steel	2	
25	BOLT	Stainless steel	4	
26	BOLT	Stainless steel	1	
27	BOLT	Stainless steel	1	
28	RETURN SPRING	SWP-B	1	
29	PLUG BOLT	alloy steel	1	
29-1	PLUG BOLT	alloy steel	1	
30	SOLENOID V/V	-	1	DS2000 Serise

Packing List

NO.	Description	Material	Qty	Bore Size(mm)			Note.
				ø50	ø63	ø80	
31	O-RING	NBR	2	P5	P5	P6	
32	ROD PACKING	NBR	1	PDU-32	PDU-40	PNY-50	
33	SCRAPER	NBR	1	-	-	SDR-50	
34	PISTON PACKING	NBR	1	PSD-50	PSD-63	PSD-80	
35	GASKET	NBR	2	C-46	C-60	C-75	ROD축/HEAD축

Dimension / Lever Type

ASTLA(B,X)50-※D

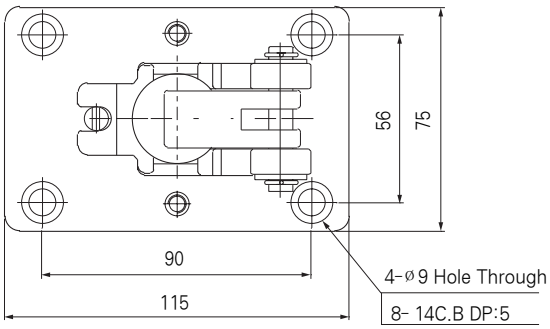

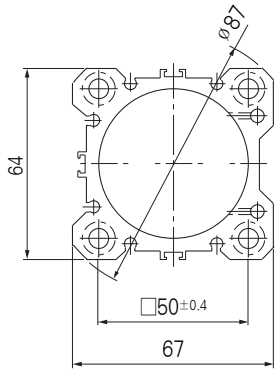

Tube Cutting

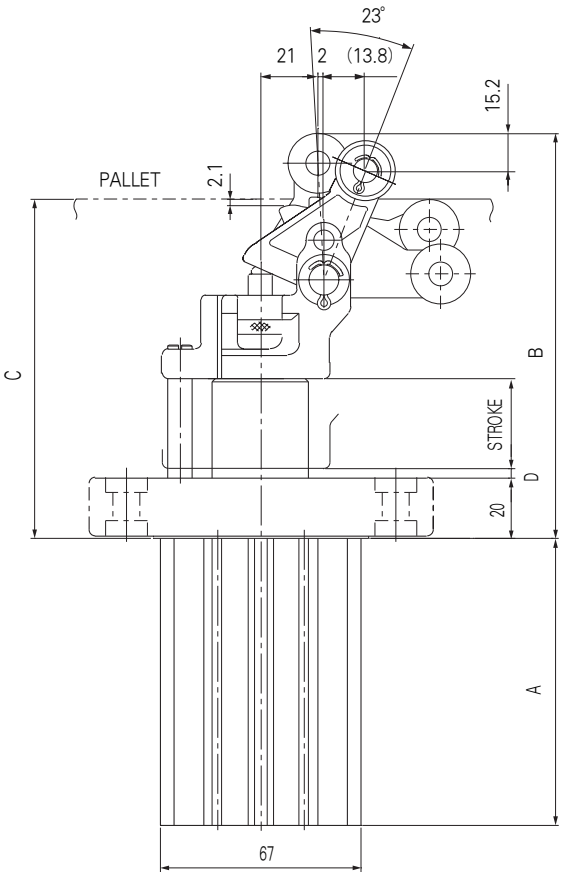

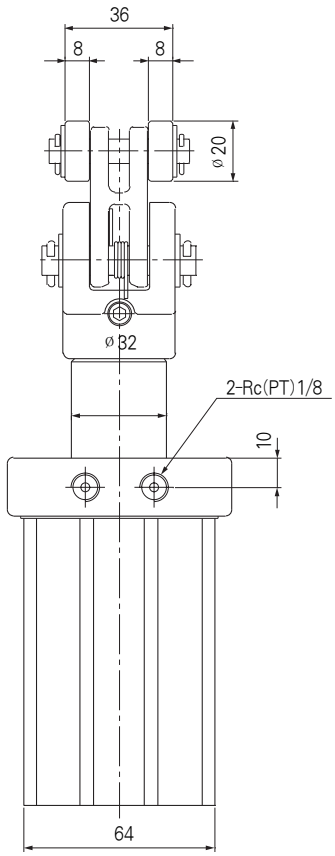

(Unit:㎜)

Stroke.(ø) \ Dim.	A	B	C	D
20	86.5	125	105	3
25	91.5	129.5	107.5	2.5
30	96.5	135	113	3
40	106.5	145	123	3

Dimensions / Lever Type

ASTLC(D)63-※D

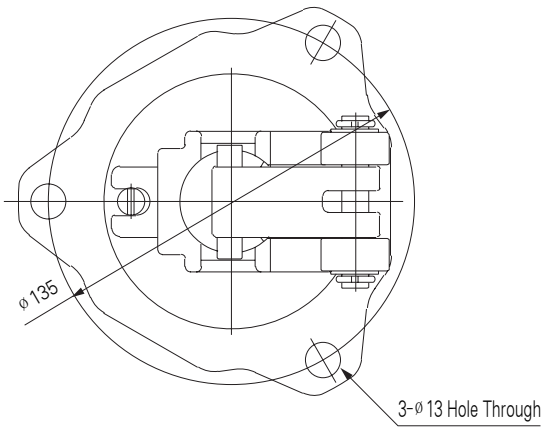

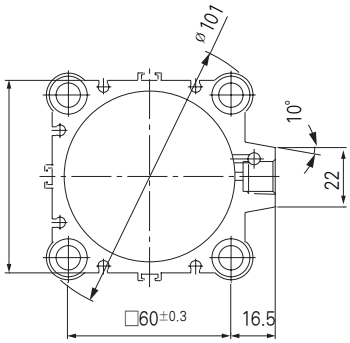

Tube Cutting

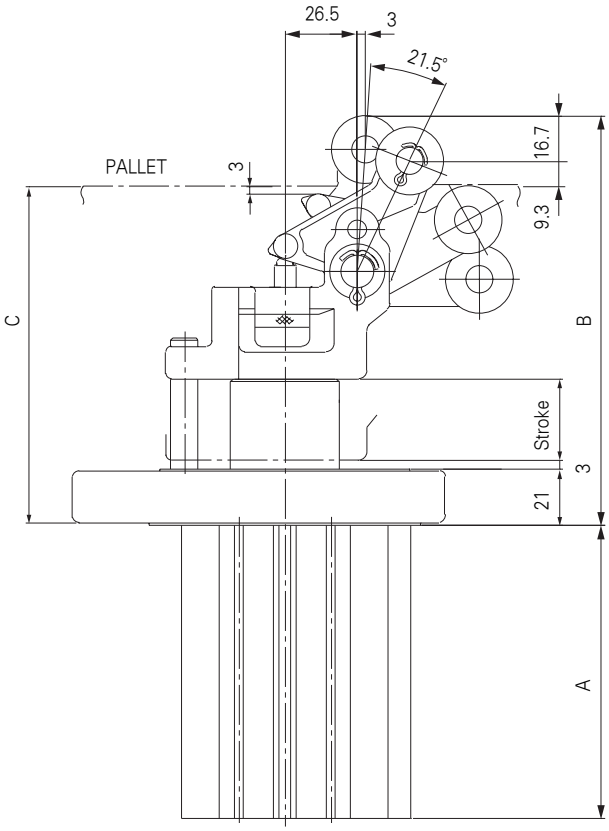

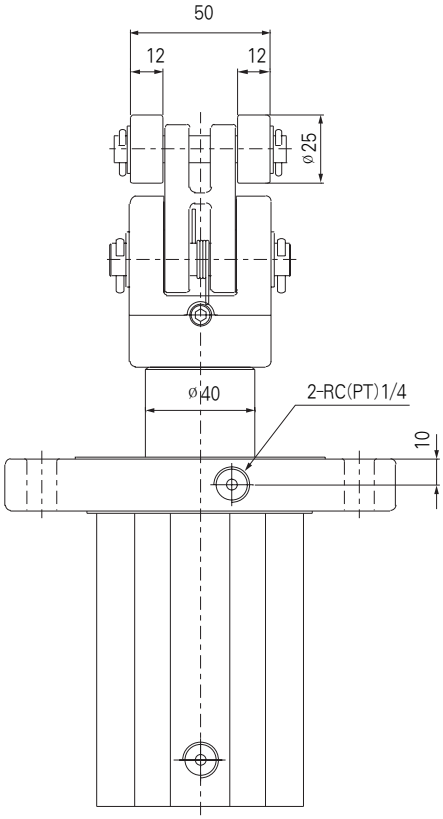

(Unit:mm)

Stroke.(ø) \ Dim.	A	B	C
30	108	151	124
40	118	161	134

Deminsions / Lever Type

ASTLC(D)80-※D

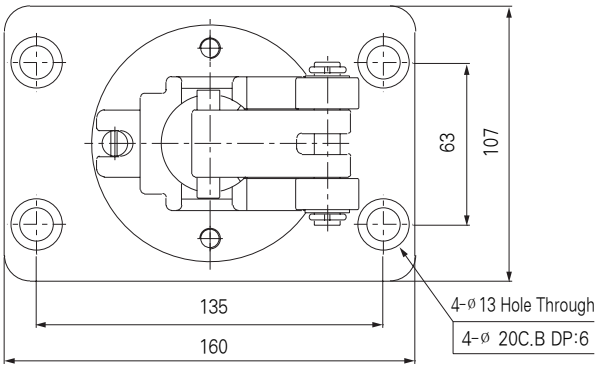

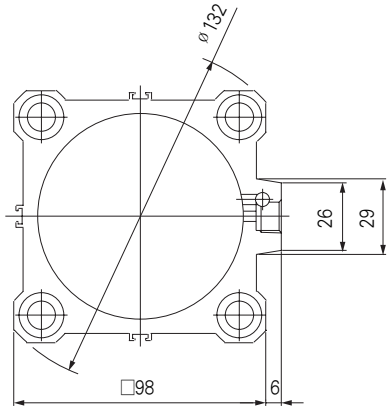

Tube Cutting

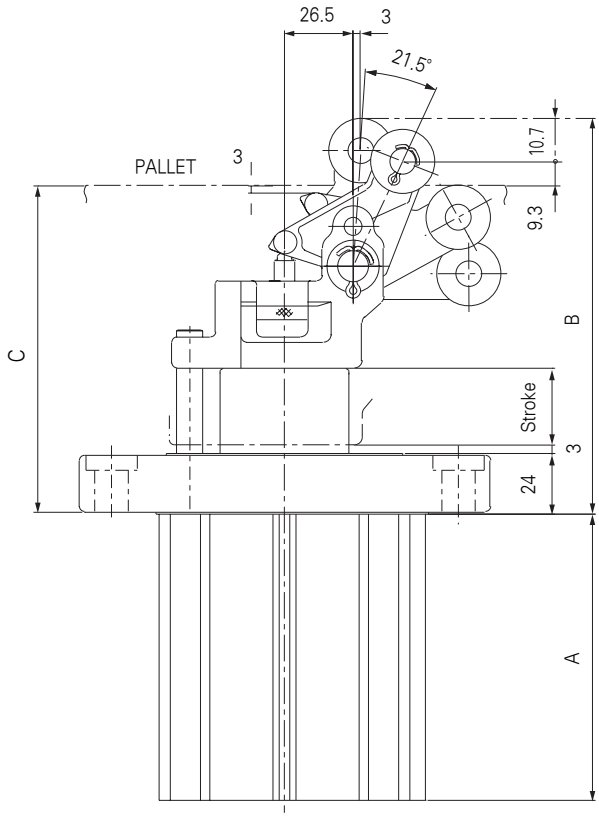

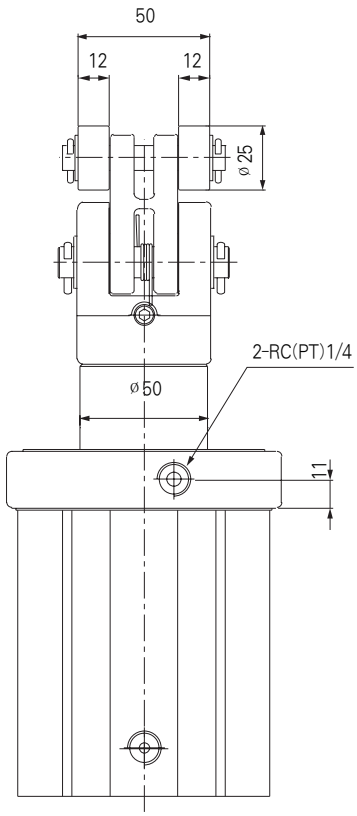

(Unit:㎜)

Stroke.(ø) \ Dim.	A	B	C
30	111	154	127
40	121	164	137

Construction / Parts List

ø50(Double Acting: ※D)

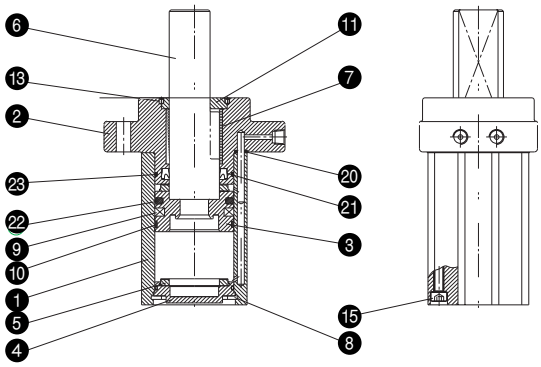

ø63, ø80(Double Acting: ※D)

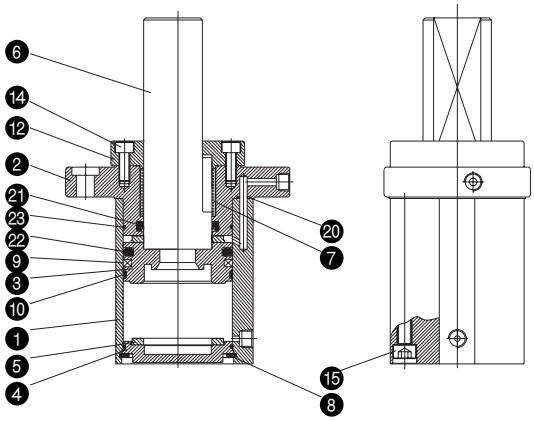

■ Single Acting: ※T

■ Double Acting: ※Z

Built-in Spring

■ V/V Type: ※Z-V※

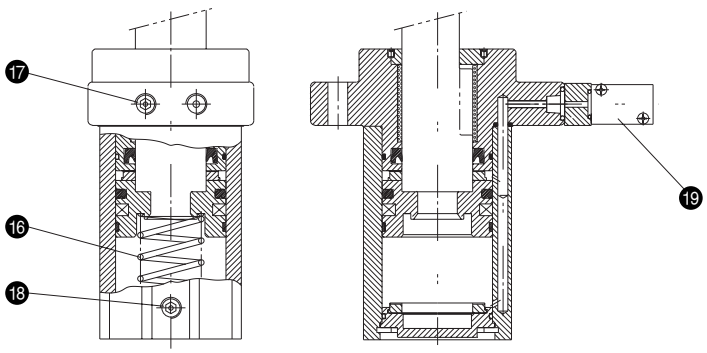

Parts List

NO.	Description	Material	Qty	Nate.
❶	TUBE	Aluminum alloy	1	
❷	ROD COVER	Aluminum alloy	1	
❸	PISTON	Aluminum alloy	1	
❹	HEAD COVER	Aluminum alloy	1	
❺	BUMPER	Urethane	2	HEAD, ROD
❻	PISTON ROD	Carbon Steel	1	
❼	BUSH	Lead bronze	1	
❽	C SNAP RIUG	Spring Steel	1	
❾	MAGNET RING	NBR	1	
❿	WEARING	Resin	1	
⓫	GUIDE		1	
⓬	COVER	Aluminum alloy	1	
⓭	BOLT	alloy steel	1	
⓮	BOLT	Chrome-molybdenum Steel	4	
⓯	BOLT	Chrome-molybdenum Steel	4	
⓰	RETURN SPRING	Spring Steel	1	
⓱	PLUG BOLT	alloy steel	1	
⓲	PLUG BOLT	alloy steel	1	
⓳	SOLENOID V/V	-	1	DS2000 Serise

Packing List

NO.	Description	Material	Qty	Bore Size			Nate
				ø50	ø63	ø80	
⓴	O-RING	NBR	2	P5	P5	P6	
㉑	ROD PACKING	NBR	1	PNY-32	PNY-40	PNY-50	
㉒	PISTON PACKING	NBR	1	PSD-50	PSD-63	PSD-80	
㉓	GASKET	NBR	2	C-46	C-60	C-75	ROD, HEAD

Dimensions / Direct Type

(Unit: mm)

ASTD50-30D

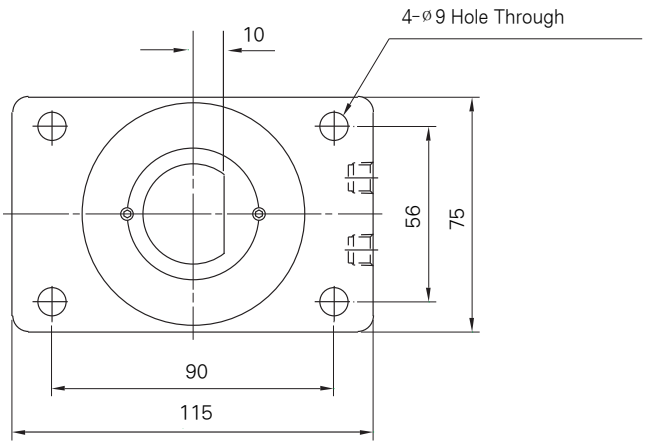

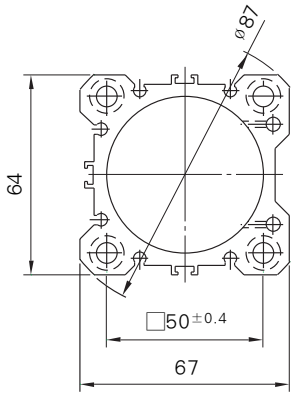

Tube Cutting

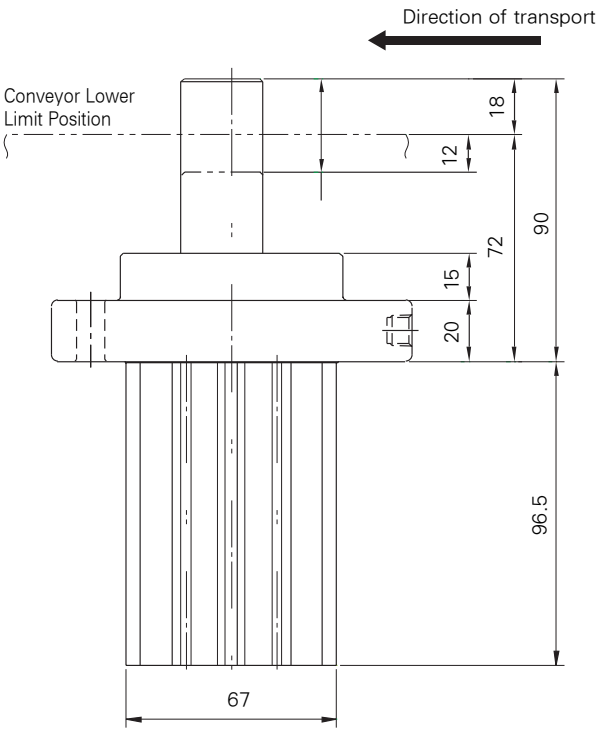

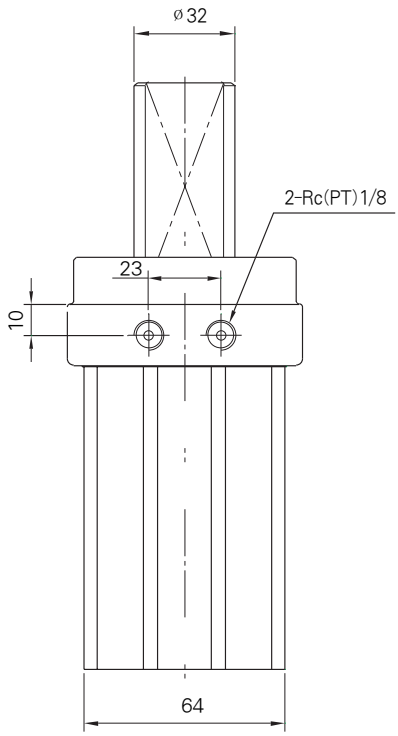

Dimensions / Direct Type

(Unit: mm)

ASTD63-40D

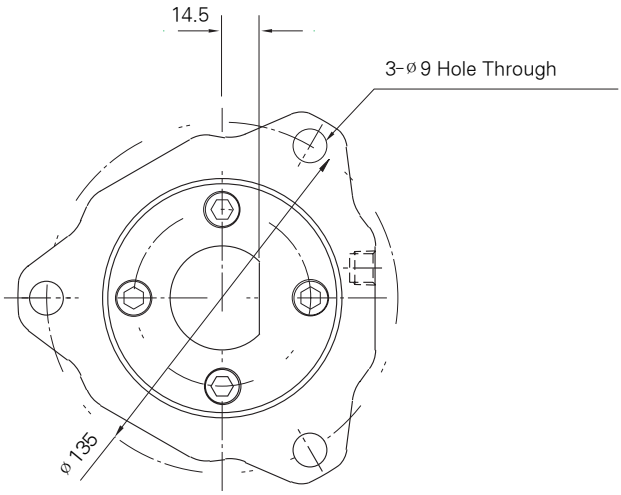

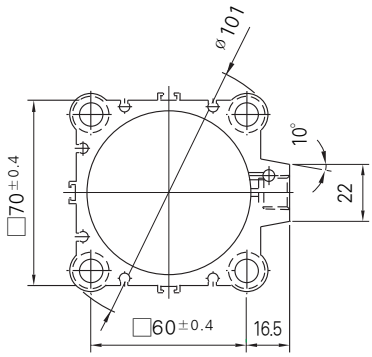

Tube Cutting

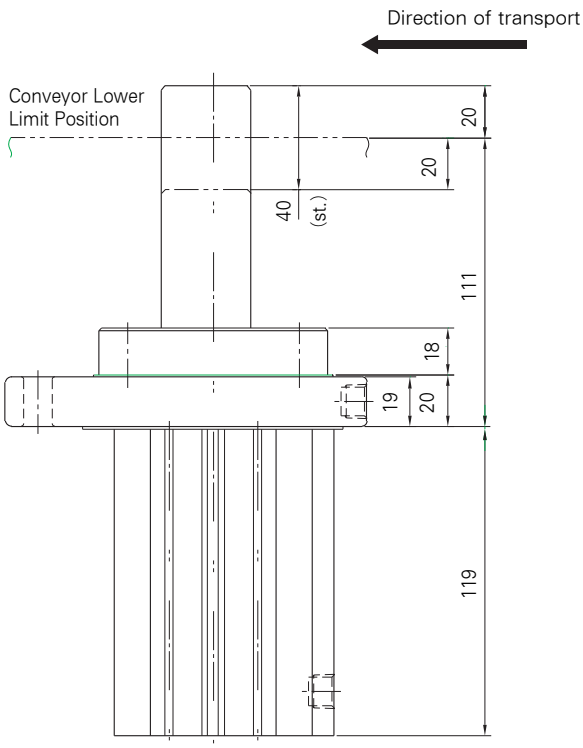

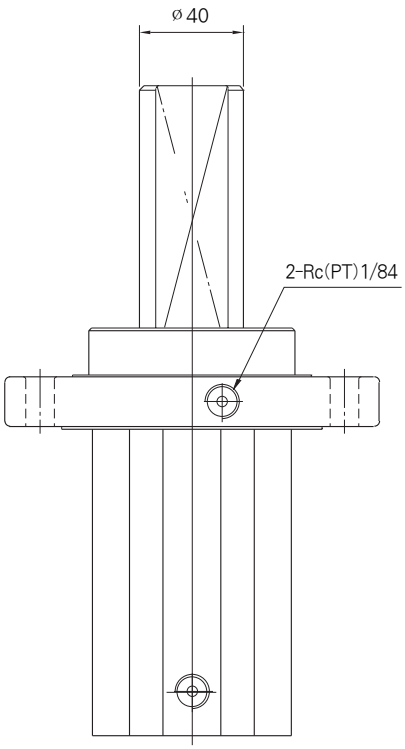

Dimensions / Direct Type

(Unit:mm)

ASTD80-40D

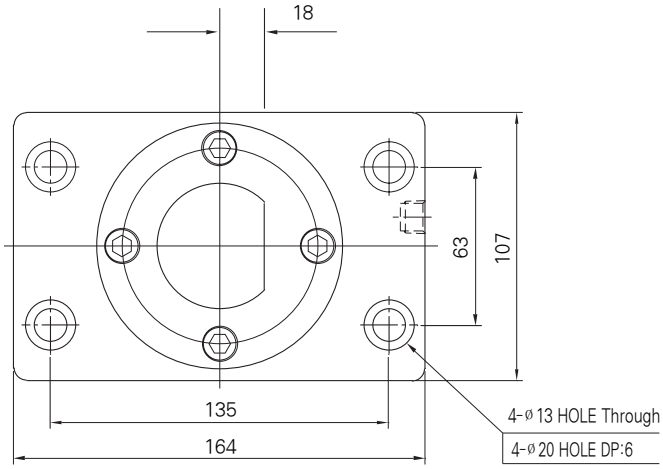

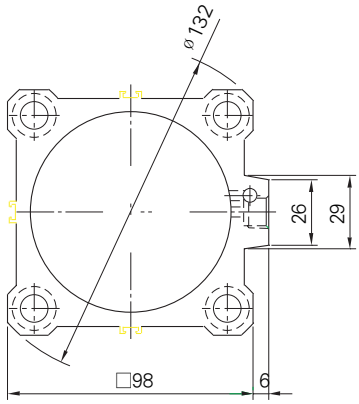

Tube Cutting

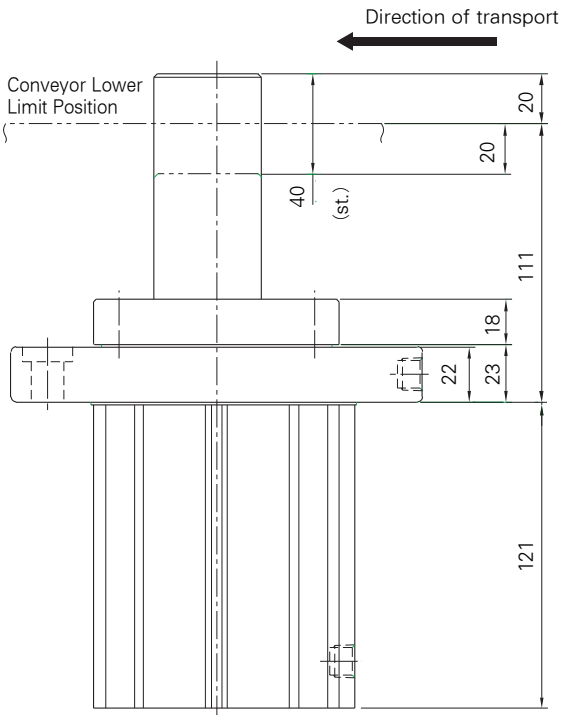

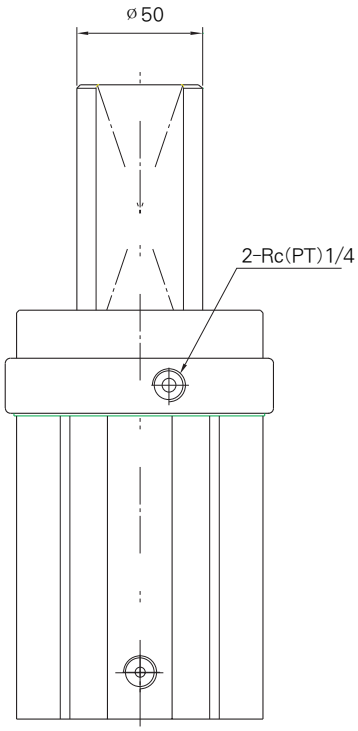

Constructions / Parts List

Ø 50(Double Acting: ※D)

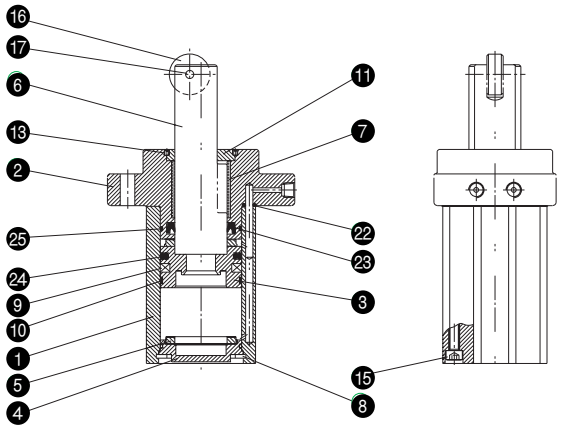

Ø 63, Ø 80(Double Acting: ※D)

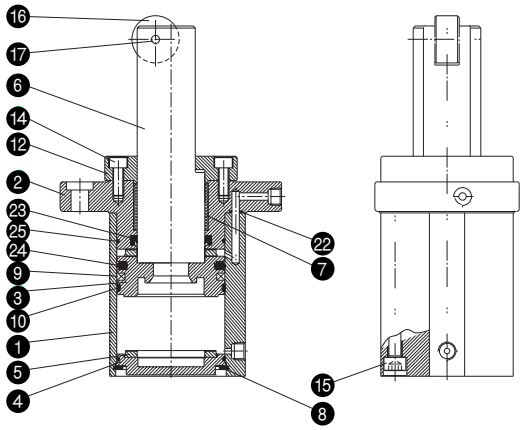

Parts List

NO.	Description	Material		Note
❶	TUBE	Aluminum alloy	1	
❷	ROD COVER	Aluminum alloy	1	
❸	PISTON	Aluminum alloy	1	
❹	HEAD COVER	Aluminum alloy	1	
❺	BUMPER	Urethane	2	Head, Rod
❻	PISTON ROD	Carbon steel	1	
❼	BUSH	Lead bronze	1	
❽	C형 멈춤링	Spring Steel	1	
❾	MAGNET RING	NBR	1	
❿	WEARING	Resin	1	
⓫	GUIDE		1	
⓬	COVER	Aluminum alloy	1	
⓭	BOLT	alloy steel	4	
⓮	BOLT	Chrome-molybdenum Steel	4	
⓯	BOLT	Chrome-molybdenum Steel	1	
⓰	ROLLER	(MC-NYLON)	1	
⓱	SPRING PIN	Spring Steel	1	
⓲	RETURN SPRING	Spring Steel	1	
⓳	PLUG BOLT	alloy steel	1	
⓴	PLUG BOLT	alloy steel	1	
㉑	SOLENOID V/V	-	1	DS2000 Serise

Packing List

NO.	Description	Material	Qty	Bore Size(mm)			Note.
				Ø50	Ø63	Ø80	
㉒	O-RING	NBR	2	P5	P5	P6	
㉓	ROD PACKING	NBR	1	PNY-32	PNY-40	PNY-50	
㉔	PISTON PACKING	NBR	1	PSD-50	PSD-63	PSD-80	
㉕	GASKET	NBR	2	C-46	C-60	C-75C	ROD , HEAD

- Single Acting: ※T
- Double Acting: ※Z
- V/V Type: ※Z-V※

Built-in spring

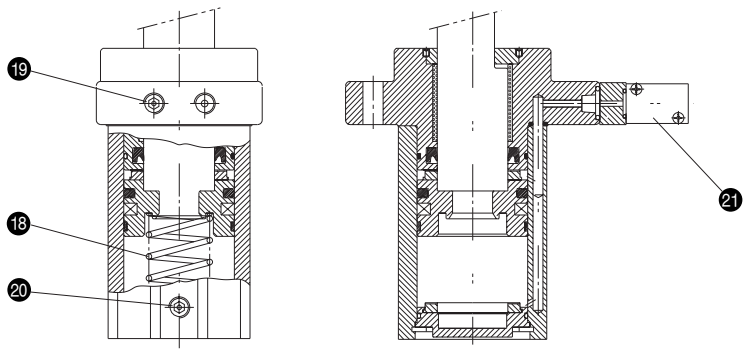

Dimensions / Roller Type

(Unit:㎜)

ASTR50-30D

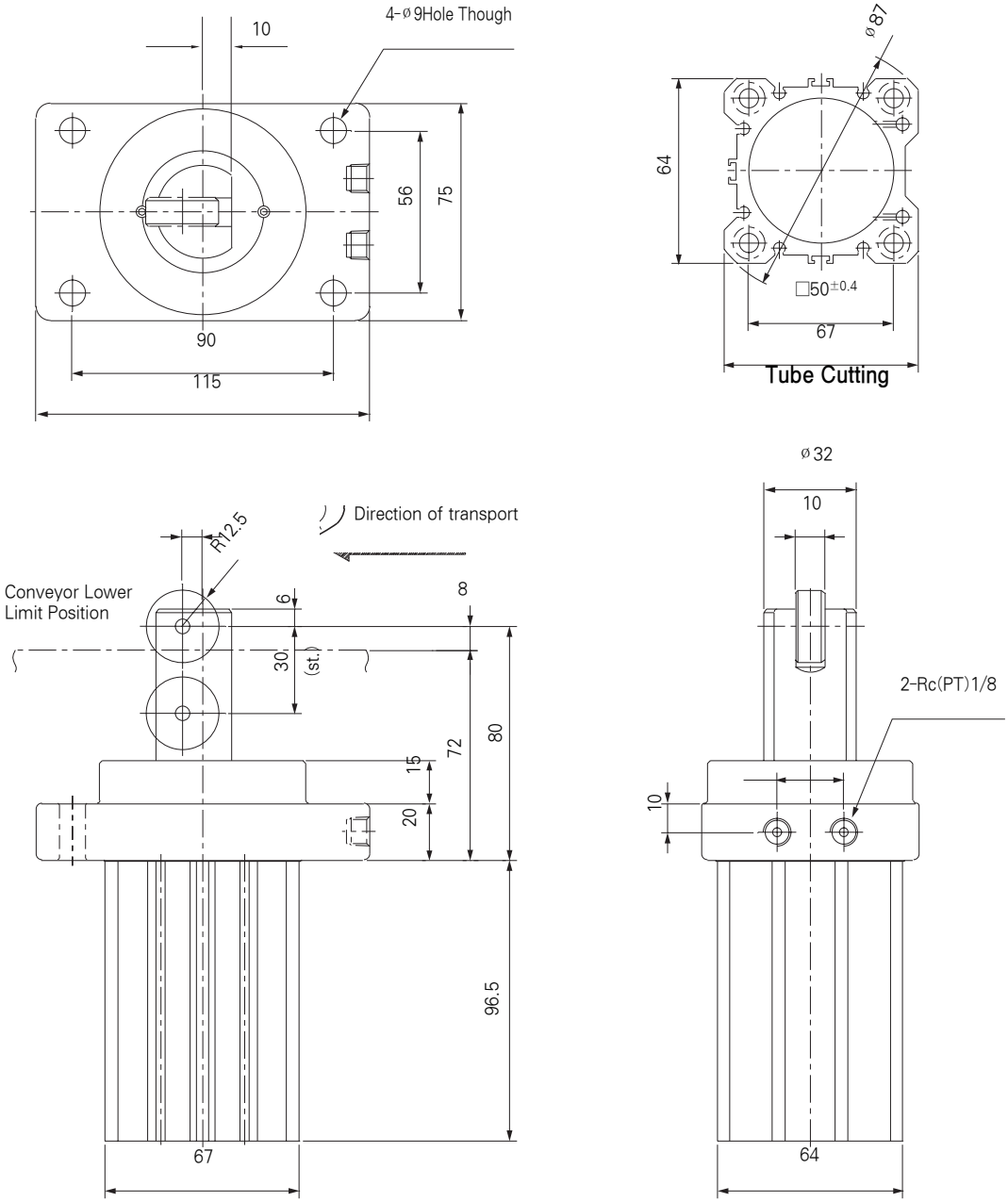

Dimensions / Roller Type

(Unit:mm)

ASTR63-40D

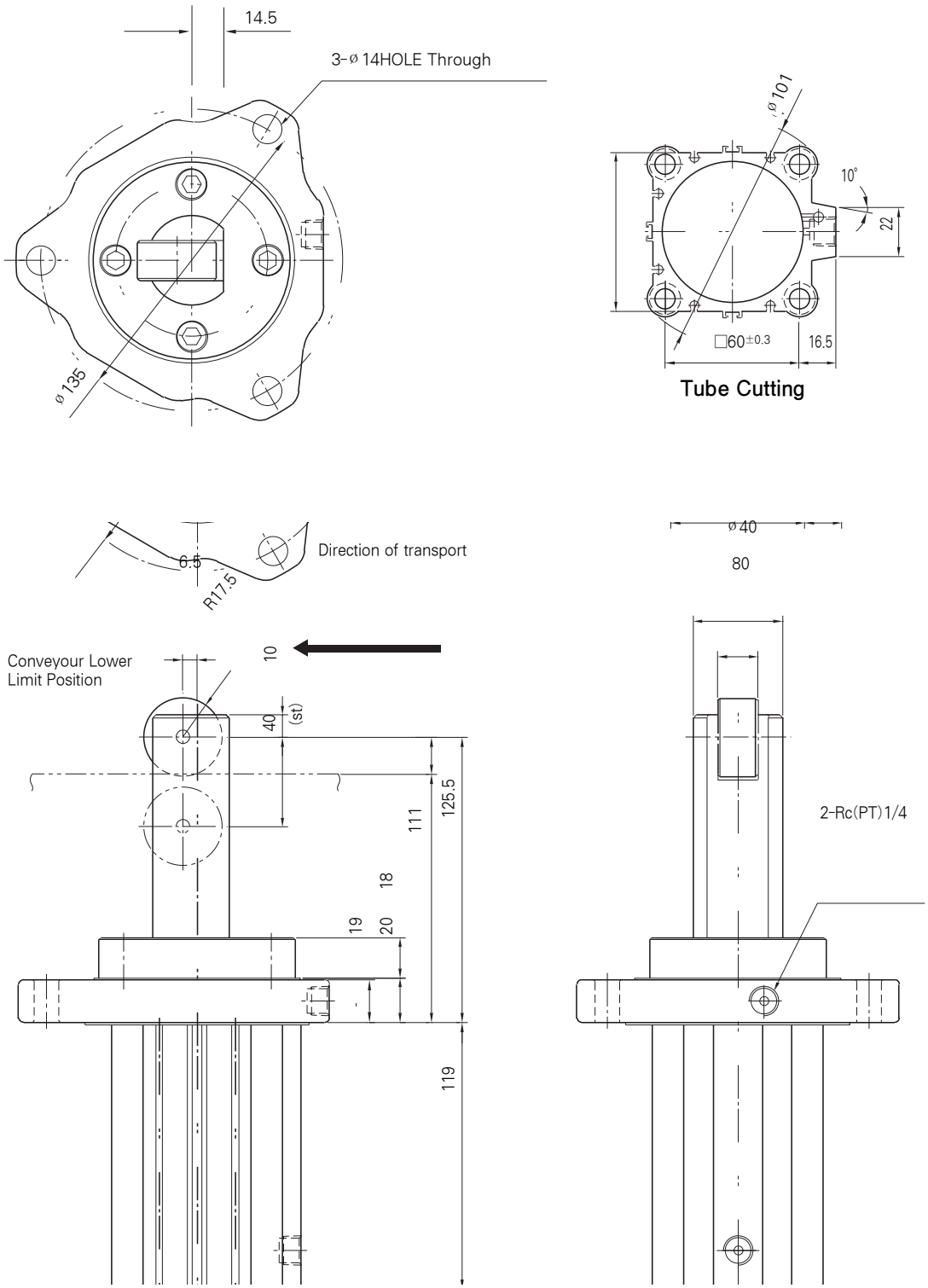

Dimensions / Roller Type

(Unit:㎜)

ASTR80-40D

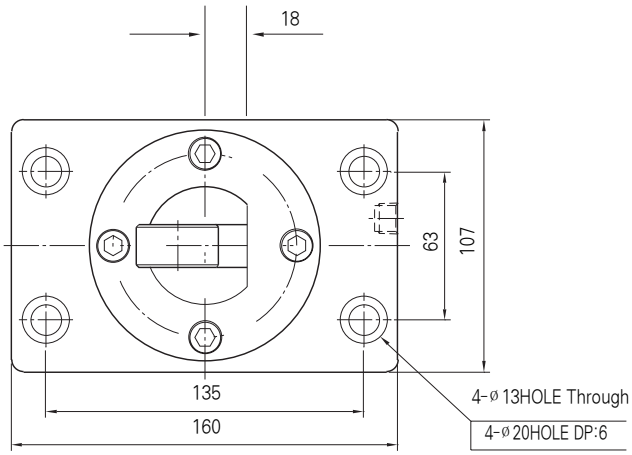

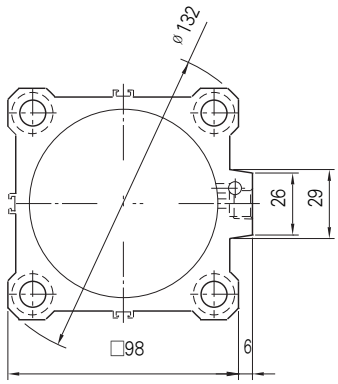

Tube Cutting

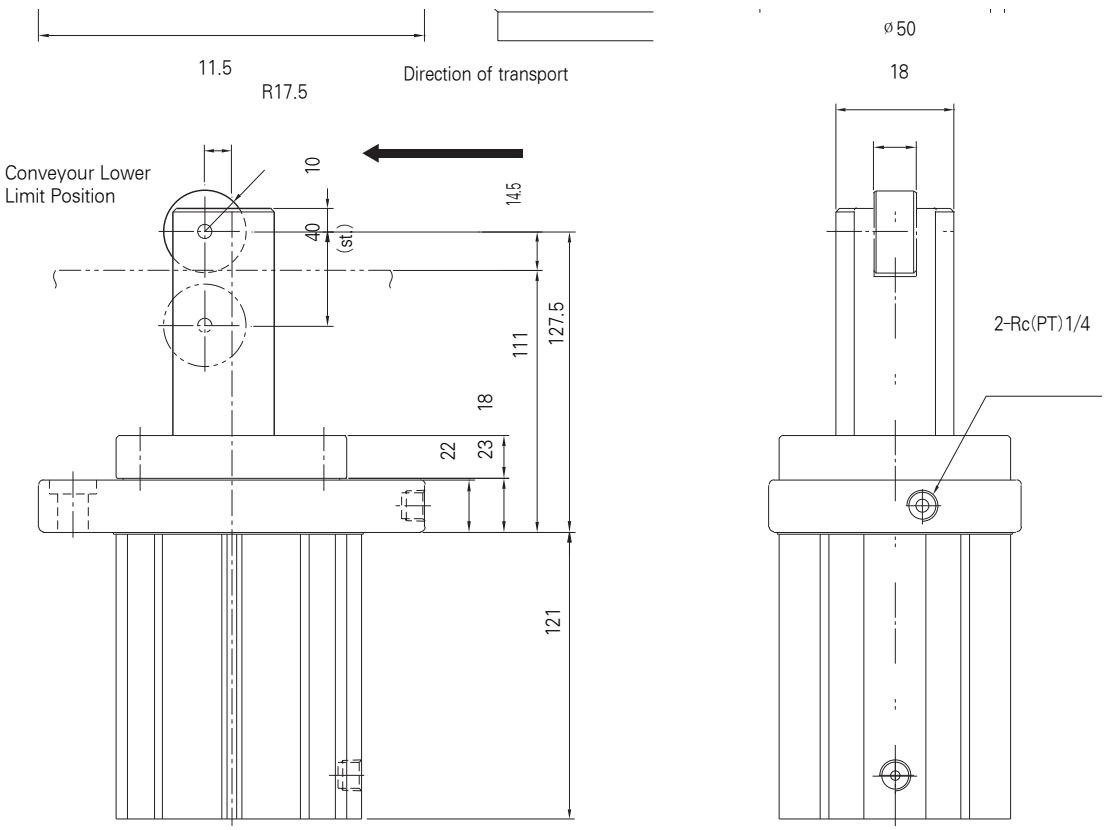

D-A7□K / Auto Switch

- Leakage current - None
- Response time - 1.2ms
- Lead Wire - Oil proof vinl. ø3.4, 0.2mm², 2 wire(red, black), 0.5m
- Impact Resistance — 30G
- Insulation Resistance — 50MΩ or more under the test voltage DC500V (Between case and cable)
- Withstand Voltage — 1500VAC 1min (between case and cable)
- Ambient Temperature — 5~60℃
- Protection Structure — IEC spec IP67, Water-proof(JISCO920), oil-proof,

※ If 3m lead wire is required, L is put at end of model numbers.
(Example) W4L

Auto Switch Specifications

D-A7□K(With Indicator Lamp)		
Auto Switch Model	W4	
Application	Relay, Sequence Control	
Voltage	DC24V	AC110V
Range of Load Current	5~40mA	5~20mA
Protection Circuit for Contact Breaker point	None	
Internal Voltage Drop	2.4V or less	
Indicator Lamp	ON: Red light emitting diode	

Auto Switch/Internal Circuit

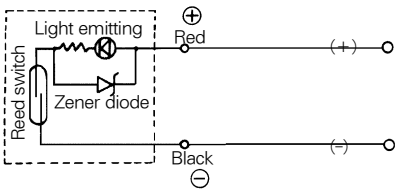

Auto Switch Dimensions

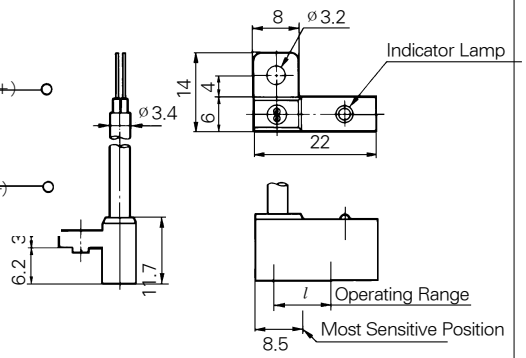

Precautions

Selection

1. When the lever is in a standing up position do not allow it to collide with the pallet.
   - When the lever is standing up and it collides with the pallet, power is absorbed to the CYL body, so make sure no collision occurs.
2. Within the limits of the speed and weight of the product on the CAT, only use when stopping the pallet.
   - When stopping the stopper cylinder from the connected CAT, the cylinder driving force becomes horizontally lowered; if this occurs, please contact us.

Mounting

1. Make sure the rotation TORQUE does not get tangled in the CYL ROD.
   - To make sure the rotation TORQUE does not get tangled in the CYL ROD, mount it so that the CYLINDER ROD contact area is parallel to the pallet contact area.
2. Be careful that the PISTON ROD slide-way does not become damaged.
   - PACKING damages may be the reason for operational errors and AIR leakages.

Operation

1. When attaching a LEVER type Lock device, after LEVER LOCKING, make sure outside force from the opposite dircetion does not get tangled.
   - When moving the CONVEYER or pallet, make sure to backup and pull down the CYLINDER.
2. When activating the pull up and pull down function of the cylinder, be careful of the narrow crack between the lever holder and the rod flange.
   - Make sure your hands or other instruments accidentally do not slip into the crack while operating.
3. Be careful that no cutting & grinding oil, water or dust wells up.
   - It will bring about damage to the shock-absorber.
4. Adjust the ROD of the shock-absorber to its maximum level to collide with the returned product.
   - When the returned product energy is larger than the shock-absorber suction force during a collision, the lever holder will absorb the load. (When output is in the maximum force stage)

Table Cylinder NLCD Series

[Ø6, (Ø8, Ø12, Ø16, Ø20,) Ø25]

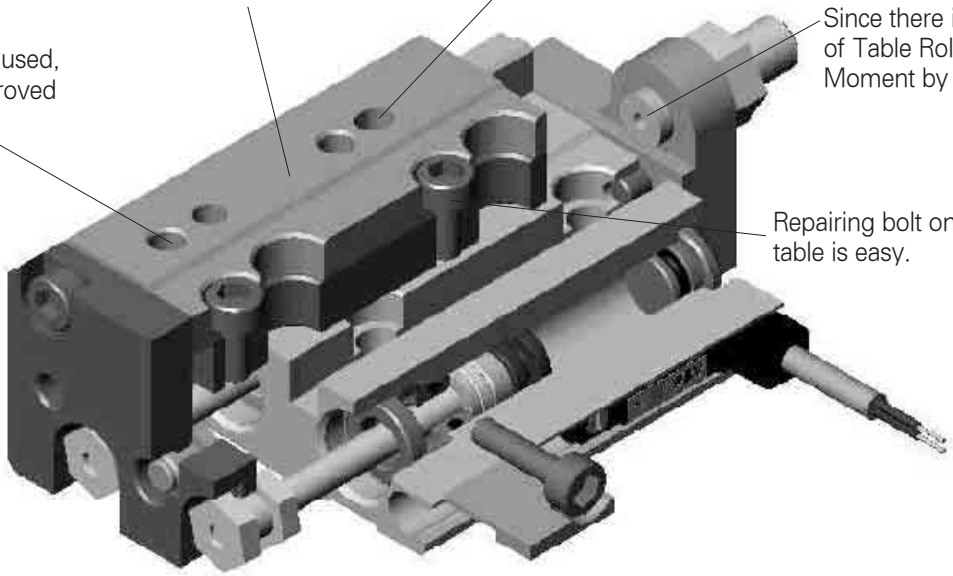

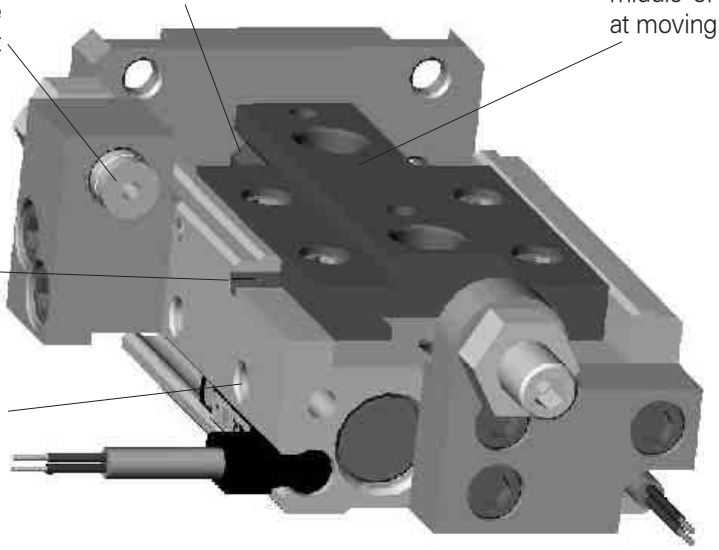

Mounting is possible in three directions

Side mounting(Body Tapped)	Side mounting(Body through hole)	Axial mounting(Body tapped)
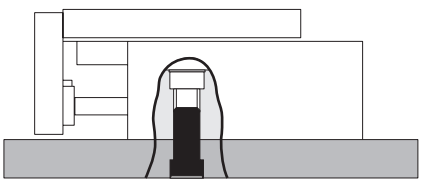	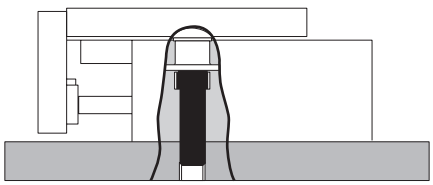	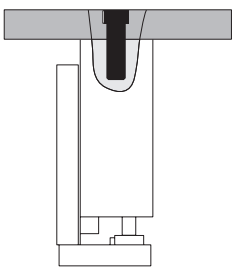

Table Cylinder

NLCD Series

Bore size : [Ø6, (Ø8, Ø12, Ø16, Ø20), Ø25]

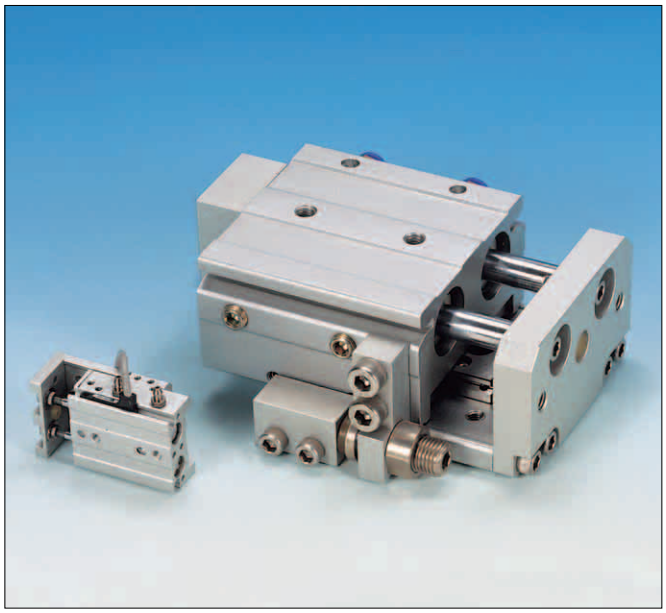

- Large work mounting parts
- Compact design of work table and air cylinder
- Large area of contacting roller is more duable
- Reparing bolt on the surface of table is easy
- Choosing position of air port, right or left is possible
- Mounting possible in three directions

How to Order

NLCD (1) 12 (2) — 50 (3) SF (4) L — W8H (5) S (6)

1 LINEAR CYLINDER
Double Rod

2 Bore size
6 : Ø6mm 8 : Ø8mm
12 : Ø12mm 16 : Ø16mm
20 : Ø20mm 25 : Ø25mm
* Contact us at Ø8~Ø20.

3 Stroke(mm)
Ø6 : 10, 20, 30, 40, 50
Ø8 : 10, 20, 30, 40, 50, 75
Ø12 : 10, 20, 30, 40, 50, 75
Ø16 : 10, 20, 30, 40, 50, 75, 100
Ø20 : 10, 20, 30, 40, 50, 75, 100
Ø25 : 10, 20, 30, 40, 50, 75, 100

4 Option Stroke Adjust
- Bolt+Rubber Damper
  Both : R
  Front side : RF
  Rear side : RB
- Shock-Absorber
  Both : S
  Front side : SF
  Rear side : SB
- Option Mounting Direction (addition)
  Blank : Right(at rear view)
  L : Left mounting

5 Type of Auto Switch
Blank : None
W8H : Reed Switch
W8V : Reed Switch
W9H : Solid State Type
W9V : Solid State Type

6 Number of Auto Switch
Blank : 2 pcs
S : 1 pc
Both : R

DAMPER Model No.

Bore size	BOLT + RUBBER DAMPER	SHOCK-ABSORBER
Ø6	TR 06	-
Ø8	TR 08	TS 0805
Ø12	TR 12	TS 0806
Ø16	TR 16	TS 1007
Ø20	TR 20	TS 1411
Ø25	TR 25	TS 1412

• Stroke adjuster at extension end(RF)

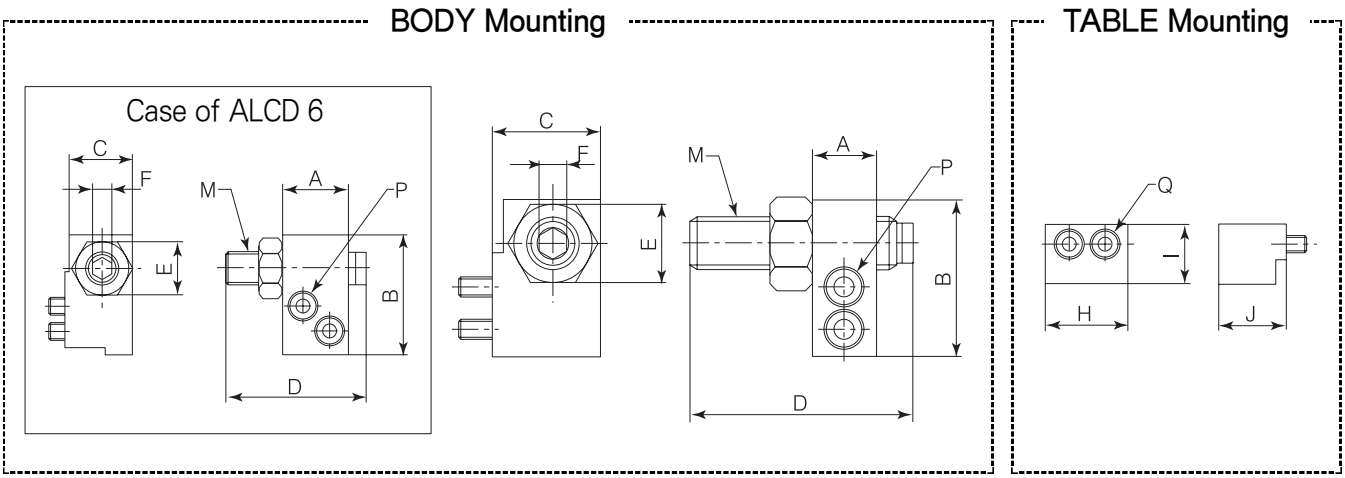

Model	Model No.	Stroke adjusting range (mm)	BODY Mounting								TABLE Mounting			
			A	B	C	D	E	F	M	P	H	I	J	Q
NLCD6	NLCD-RF6-5	5	10	18	10.5	16.5	8	2.5	M5×0.8	M2.5×10	12.5	10	10	M2.5×10
	NLCD-RF6-15	15				26.5								
NLCD25	NLCD-RF25-5	5	16	49.5	26.5	32.5	19	6	M14×1.5	M8×25	31	18.5	22	M6×25
	NLCD-RF25-15	15				42.5								
	NLCD-RF25-25	25				52.5								

• Stroke adjuster at retraction end(RB)

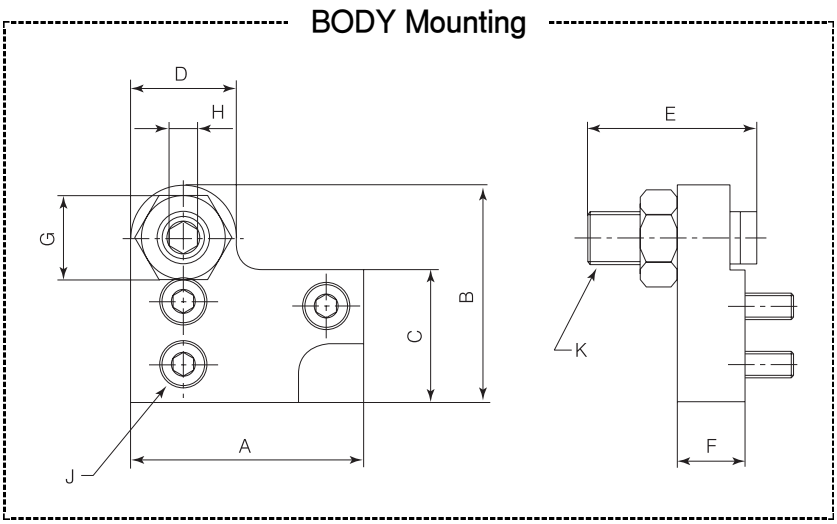

Model	Model No.	Stroke adjusting range (mm)	BODY Mounting									
			A	B	C	D	E	F	G	H	J	K
NLCD6	NLCD-RB6-5	5	22	20.5	12.5	10	16.5	6.5	8	2.5	M2.5×8	M5×0.8
	NLCD-RB6-15	15					26.5					
NLCD25	NLCD-RB25-5	5	57	58	39	23	32.5	18	19	6	M8×16	M14×1.5
	NLCD-RB25-15	15					42.5					
	NLCD-RB25-25	25					52.5					

Specifications

Bore size(Ø mm)	6	8	12	16	20	25
Fluid	Air					
Operation	Double Acting					
Operating Pressure	0.15 ~ 0.7 Mpa(1.5 ~ 7.1kgf/cm²)					
Proof Temp	1.05 Mpa (10.7kgf/cm²)					
Ambient and Media Temp	-10 ~ 60℃					
Piston Speed	50 ~ 500mm/s					
Lubrication	Non Lube					
Auto Switch(Ø4) (OPTION)	Existing plug : DC(24V) / AC(110V) Non plug : DC924V)					
STROKE length tolerance	0 ~ +1mm					
OPTION (STROKE ADJUST)	BOLT + DMAPER(Front side/Rear side/Both side) / SHOCK-ABSORBER					

Standard Stroke

Model	Stroke(mm)							
	10	20	30	40	50	75	100	
Ø6	●	●	●	●	●			
Ø8	●	●	●	●	●	●		
Ø12	●	●	●	●	●	●		
Ø16	●	●	●	●	●	●	●	
Ø20	●	●	●	●	●	●	●	
Ø25	●	●	●	●	●	●	●	

Weight Table

(Unit : g)

Modle	Standard Stroke(mm)							Option			
	10	20	30	40	50	75	100	Extension stroke adjuster	Retraction stroke adjuster	Extension shock absorber	Retraction shock absorber
NLCD6	97	120	138	186	216	-	-	8	8.5	-	-
NLCD8	165	176	209	258	313	456	-	13.5	8	31	40
NLCD12	336	336	336	396	495	683	920	27	18	45	54
NLCD16	588	588	597	656	784	1127	1421	45	27	72	94
NLCD20	950	969	997	1092	1235	1615	2137	90	64	153	184
NLCD25	1599	1618	1627	1767	2008	2557	3162	140	174	155	193.5

Table Deflection

Table deflection by pitch moment

Table pitch deflection due to static pitch moment applied at arrow for fully extended stroke of slide table.

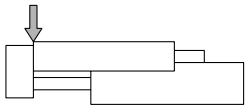

Ø6

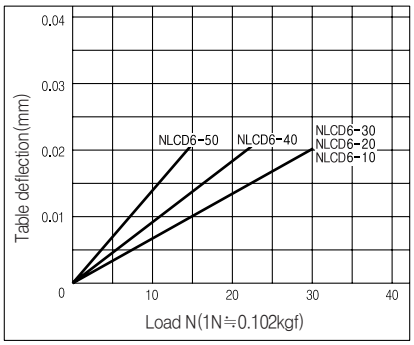

Ø25

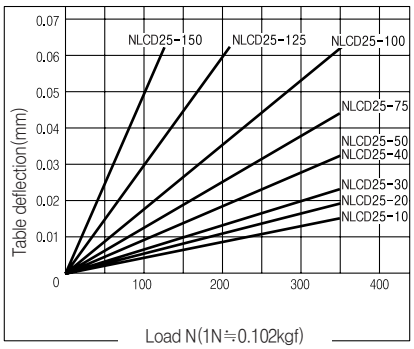

Table deflection by yaw moment

Table yaw deflection due to static yaw moment applied at arrow for extended stroke of slide table.

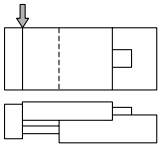

Ø6

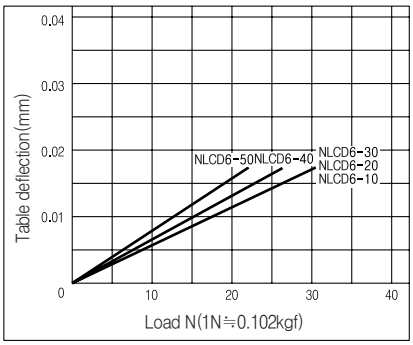

Ø25

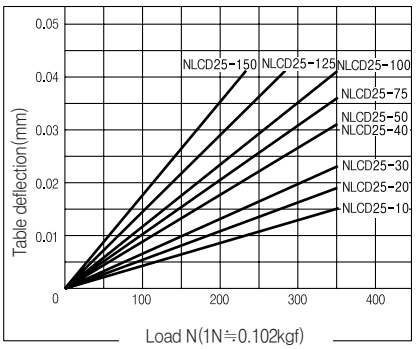

Table deflection by roll moment

Table roll deflection arrow A due to static roll moment applied at arrow F when Lr=(see table) and table is retracted.

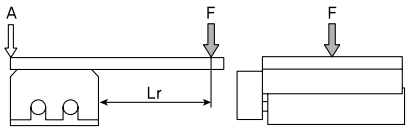

Ø6 Lr = 24mm

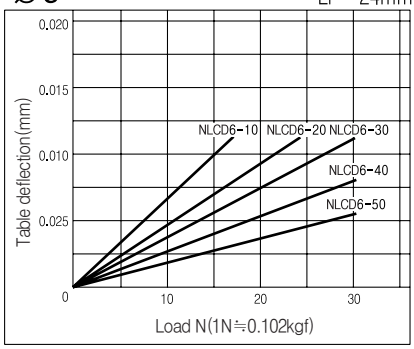

Ø25 Lr = 154mm

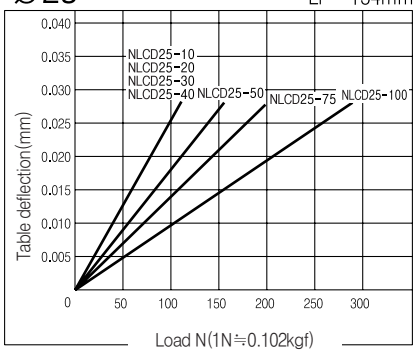

Structure

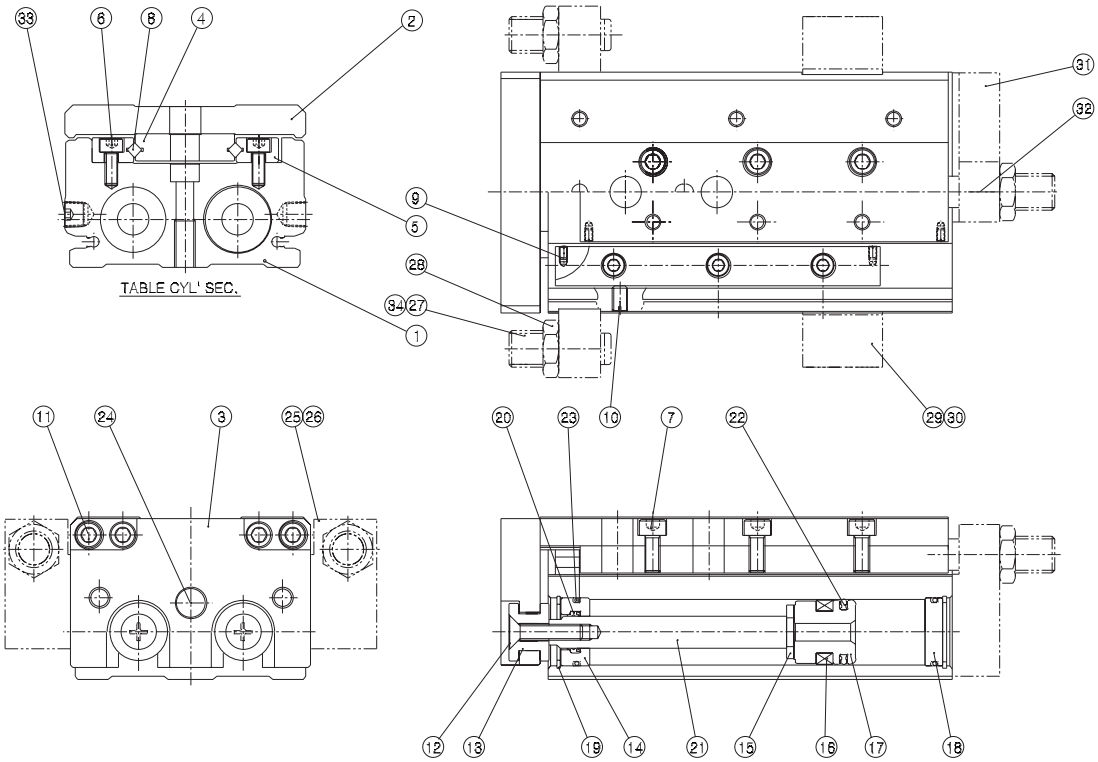

Part list

No.	Description	Material	Note
①	Body	Alluminum Ally	
②	Table	Alluminum Ally	
③	Plate	Alluminum Ally	
④	Center Rail	Bearing Steel	
⑤	Support Rail	Bearing Steel	
⑥	Blanking Plug	Stainless Steel	
⑦	Blanking Plug	Stainless Steel	
⑧	Roller & Space	Bearing Steel/MC Nylon	
⑨	Set Screw	Stainless Steel	
⑩	Set Screw	Stainless Steel	
⑪	Blanking Plug	Stainless Steel	
⑫	(+)Flush bolt	Stainless Steel	
⑬	Retainer	Alluminum Ally	
⑭	Rod Cover	Alluminum Ally	
⑮	Bumper	Rubber	
⑯	Magnet	NBR	
⑰	Piston	Alluminum Ally	

No.	Description	Material	Note
⑱	Head Cover	Alluminum Ally	
⑲	O-Ring	Spring Steel	
⑳	Rod Packing	NBR	
㉑	Piston Rod	Stainless Steel	
㉒	Piston Packing	NBR	
㉓	Gasket(o-ring)	NBR	
㉔	Plate Bumper	Polyurethane	
㉕	Bumper Plate-1	Stainless Steel	Option
㉖	Blanking Plug	Stainless Steel	Option
㉗	Bumper Holder	Ally Steel	Option
㉘	NUT	Ally Steel	Option
㉙	Bumper Plate-2	Alluminum Ally	Option
㉚	Blanking Plug	Stainless Steel	Option
㉛	Bumper Plate-3	Alluminum Ally	Option
㉜	Blanking Plug	Stainless Steel	Option
㉝	Plug	Ally Steel	
㉞	Plate Bumper	Polyurethane	

Spare Parts/Seal Kits

No.	Description	Material	Part. No	
			ø6	ø25
①	Piston seal	NBR	OPA-6	OPA-25
②	Rod Seal	NBR	KSYA-3	ORA-12
③	Tube Gasket	NBR	ø6×ø4×1	ø26.5×ø22.5×2

Dimensions (Bore size ∅6)

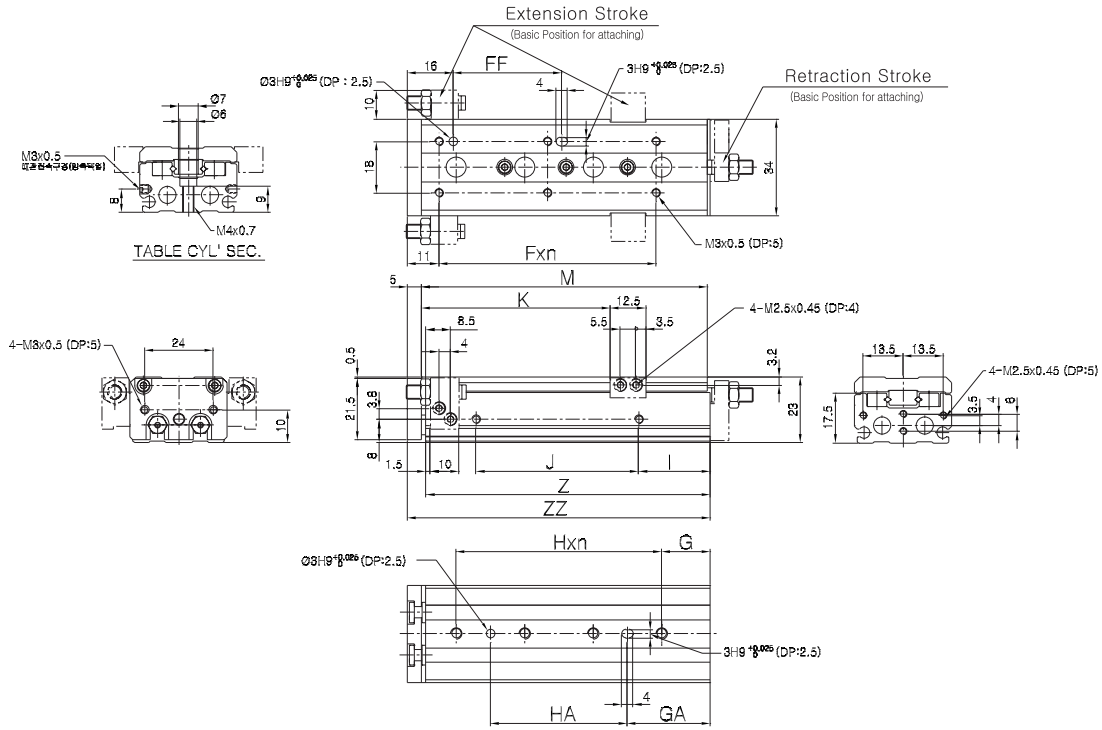

Model	Fxn	FF	G	Hxn	GA	HA	I	J	K	M	Z	ZZ
NLCD06-10	20×1	20	6	25×1	12	25	10	17	26	42	41.5	48
NLCD06-20	30×1	30	6	35×1	12	20	10	27	36	52	51.5	58
NLCD06-30	20×2	20	11	20×2	22	20	7	40	46	62	61.5	68
NLCD06-40	28×2	28	13	30×2	26	30	19	50	56	84	83.5	90
NLCD06-50	38×2	38	17	24×3	34	48	25	60	66	100	99.5	106

Dimensions (Bore size ∅25)

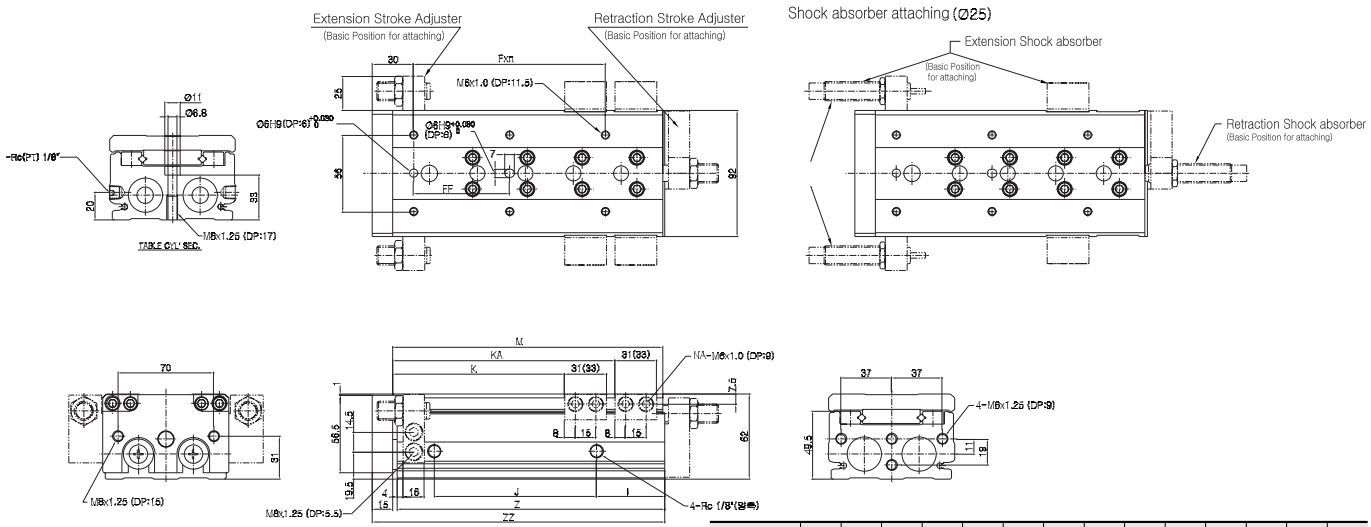

Model	Fxn	FF	G	Hxn	GA	HA	I	J	K	KA	NA	M	Z	ZZ
NLCD25-10	50×1	40	22	45×1	22	45	12	47	35	-	4	92	90.5	108.5
NLCD25-20	50×1	40	22	45×1	22	45	12	47	45	-	4	92	90.5	108.5
NLCD25-30	50×1	40	22	45×1	22	45	12	47	55	-	4	92	90.5	108.5
NLCD25-40	60×1	50	22	55×1	22	55	12	57	65	-	4	102	100.5	118.5
NLCD25-50	35×2	35	20	35×2	55	35	12	70	75	-	4	115	113.5	131.5
NLCD25-75	60×2	60	26	35×3	61	70	33	90	100	-	4	156	154.5	172.5
NLCD25-100	70×2	70	32	35×4	102	70	50	114	125	162	8	197	195.5	213.5

Option (Shock absorber)

• Extension Dimensions (SF)

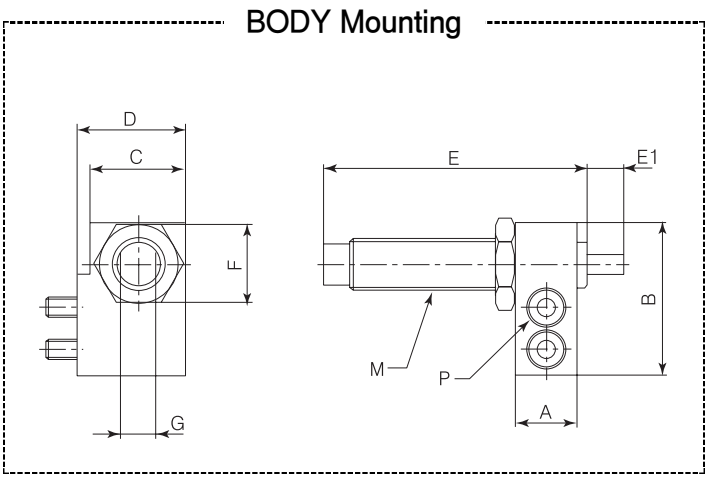

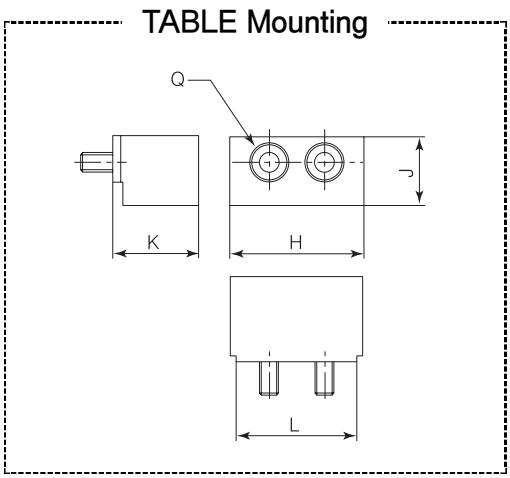

Model	Model No.	BODY Mounting										TABLE Mounting				
		A	B	C	D	E	E1	F	G	M	P	H	J	K	L	Q
NLCD25	NLCD-SF25	16	49.5	24	26.5	68	15	19	12	M14×	M8×25	33	18.5	22	31	M6×25

• Retraction Dimensions (SB)

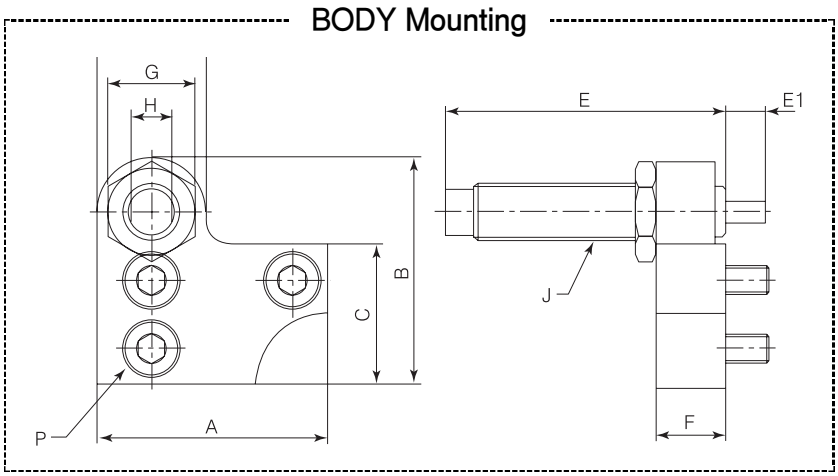

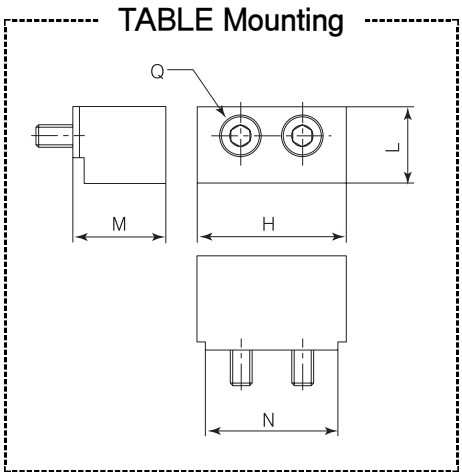

Model	Model No.	BODY Mounting											TABLE Mounting				
		A	B	C	D	E	E1	F	G	H	J	P	K	L	M	N	Q
NLCD25	NLCD-SB25	57	58	39	23	68	15	18	19	12	M14×1.5	M8×16	33	18.5	22	31	M6×25

How to Select

* Do not apply a load over the operating limit range.
When actuator is used outside of operating limits, eccentric loads on guide will be in excess this causing vibration on guide and inaccuracy and shortens life.

1. Operation conditions

Enumerate the operating conditions according to mounting position and work form.

- Model used
- Cushion style
- Work mounting position
- Mounting position
- Average speed Va (mm/s)
- Allowing load W (kg) Fig. 1
- Over hang Ln (mm) : Fig 2

Cylinder : NLCD025-30
Cushion : Rubber bumper
Work table mounting
Mounting : Lateral wall mounting
Average speed : Va = 300[mm/s]
Load : W = 1 [kg]
L1 = 15mm, L2 = 20mm, L3 = 35mm

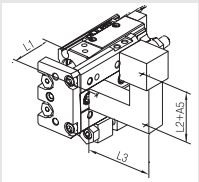

2. Kinetic energy

Calculate kinetic energy E(J) of work.
Calculate allowable kinetic energy Ea(J).
Check that kinetic energy of work does net exceed allowable kinetic energy.

$E = 1/2 \times W \times (V/1000)^2$
Coilision $V = 1.4 \times Va$ (mm/s)
$Ea = K \times Emax$

Work mounting coeficient K : Fig. 3
Max. allowable kinetic energy Emax : Table 1
Kinetic energy(E) ≤ Allowable kinetic energy(Ea)

$E = 1/2 \times 1 \times (420/100)^2 = 0.088$
$V = 1.4 \times 300 = 420$
$Ea = 1 \times 0.11 = 0.24$

Possible to use by $E = 0.088 \leq Ea = 0.24$

3. Load rate

3-1 Load rate of work

Calculate static work Wa(kg)
Calculate load rate $\alpha 1$ of static work.

$Wa = K \times \beta \times Wmax$
Work mounting coeficient K : Fig. 3
Allowable load coeficient β : Graph 1
Max. Allowable moment Wmax : Table 2
$\alpha_1 = W / Wa$

$Wa = 1 \times 1 \times 9 = 9$
$K = 1$
$\beta = 1$
$Wmax = 9$
$\alpha_1 = 1/9 = 0.11$

3-2 Load rate of static moment

Calculate static moment M(N.m).
Calculate allowable static moment Ma(N.m).
Calculate load rate $\alpha 2$ of static moment.

$Wa = K \times \beta \times Wmax$
Work mounting coeficient K : Fig. 3
Allowable load coeficient β : Graph 1
Max. Allowable moment Wmax : Table 2
$\alpha_1 = W / Wa$

Yawing (My) $= 1 \times 9.8(15+46)/1000 = 0.598$
$May = 1 \times 1 \times 27.54 = 27.54$
$Mymax = 27.54$ $K = 1$, $\nu = 1$
$\alpha_2 = 0.598/27.54 = 0.02$
Rolling (Mr) $= 1 \times 9.8(20+17)/1000 = 0.362$
$May = 27.54$
$\alpha'_2 = 0.362/27.54 = 0.013$

3-3 Load rate of kinetic moment

Calculate kinetic moment Me(N.m).

Calculate allowable kinetic moment Mea(N.m).

Calculate load rate $\alpha 3$ of kinetic moment.

$Me = 1/3 \times We \times 9.8(Ln+An)/1000$
Coilision equivalence laod $We = \delta \times W \times V$
δ : Dumper coeficient
- With urethance bumper(Standard) = 0.04
- With Shock absorber = 0.01

Corrected value for center position distance of moment An : Table 3
$Mea = K \times \nu \times Mmax$
Work mounting coeficient K : Fig. 3
Allowable moment coeficient ν : Graph 2
Max. allowable moment Mmax : Table 4
$\alpha_3 = Me / Mea$

Pitching : $Mep = 1/3 \times 16.8 \times 9.8 \times (35+17)1000 = 2.85$
$We = 0.04 \times 1 \times 420 = 16.8$, $A2 = 17$
$Meap = 1 \times 0.7 \times 27.54 = 19.28$
$K = 1$, $\nu = 0.7$, $Mpmax = 27.54$
$\alpha_3 = 2.85/19.28 = 0.15$

Yawing : $Mep = 1/3 \times 16.8 \times 9.8 \times (30+46)1000 = 3.62$
$We = 16.8$, $A4 = 46$
$Meay = 19.28$ (Same value as Meap)
$\alpha'_3 = 3.62/19.28 = 0.19$

4. Sum of load rate

When sum of load rate does not exceed 1, it is possible to use.

$\Sigma\alpha_n = \alpha_1 \times \alpha_2 \times \alpha_3 \leq 1$

$\Sigma\alpha_n = \alpha_1 \times \alpha_2 \times \alpha'_2 \times \alpha_3 \times \alpha'_3$
$= 0.11+0.02+0.013+0.15+0.19 = 0.48 \leq 1$
And it is possible to use.

Fig. 1 Allowable load : W(kg)

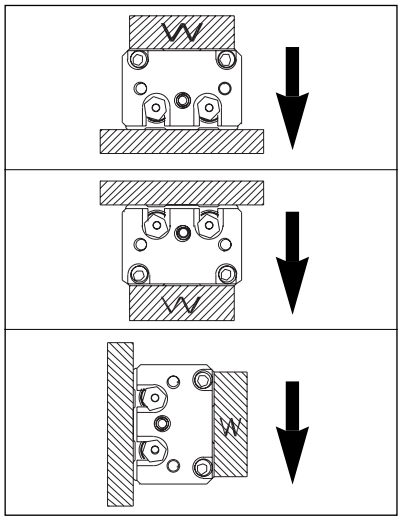

Fig. 2 Overhang : Ln(mm), Correction value for moment center An(mm)

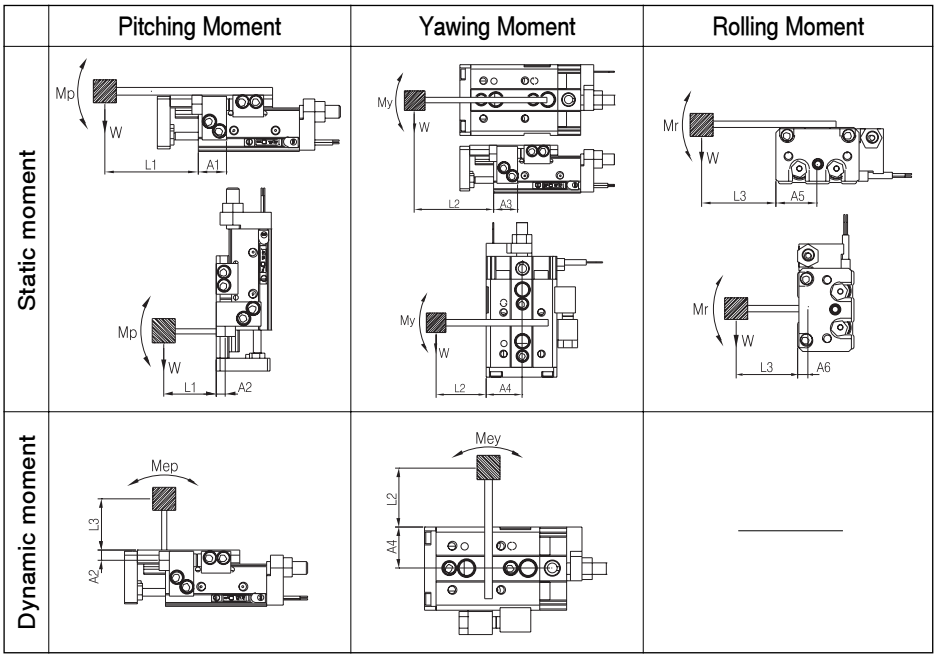

Note) Static moment : Moment by gravity
Kinetic moment : Moment by stopper coilision

Fig. 3 Work mounting coeffcient : K

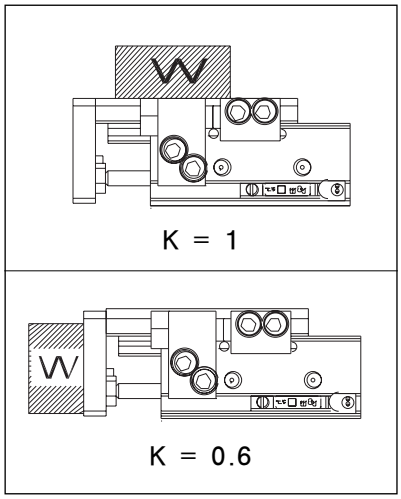

Table 1 Max. allowable kinetic energy : Emax(J)

Model	Allowable kinetic energy	
	Rubber bumper	Shock absorber
NLCD 6	0.018	-
NLCD 8	0.027	0.045
NLCD12	0.055	0.11
NLCD16	0.11	0.22
NLCD20	0.16	0.32
NLCD25	0.24	0.48

Graph 1 Allowable static load coefficient : β

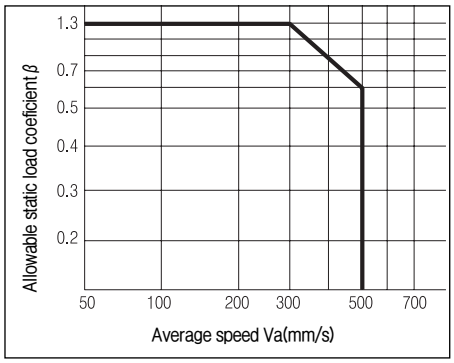

Table 2 Max. allowable static load Wmax(kg)

Model	Max. allowable static load
NLCD 6	0.6
NLCD 8	1
NLCD12	2
NLCD16	4
NLCD20	6
NLCD25	9

Table 3 Correction value for moment center distance : An(mm)

Model	Correction value for moment center distance					
	A1	A2	A3	A4	A5	A6
NLCD 6	11	7.8	13	17	17	7.8
NLCD 8	11	8.7	13	20	20	8.7
NLCD12	24	10	26	25	25	10
NLCD16	27	13.5	30	31	31	13.5
NLCD20	34	15	36	38	38	15
NLCD25	42	17	44	46	46	17

Graph 2 Allowable moment coefficient : υ

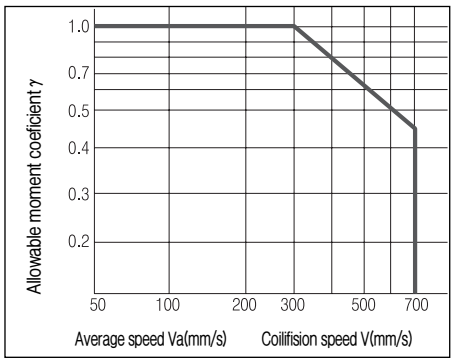

Table 4 Max. allowable moment : Mmax(N.m)

Model	Stroke (mm)						
	10	20	30	40	50	60	70
NLCD 6	0.63	0.9	1.08	1.08	1.08		
NLCD 8	1.8	1.8	2.52	3.24	3.78	3.78	
NLCD12	3.78	3.78	3.78	5.22	6.3	9	9
NLCD16	10.17	10.17	10.17	10.17	14.31	22.5	30.7
NLCD20	17.46	17.46	17.46	17.46	24.48	31.5	45.45
NLCD25	27.54	27.54	27.54	27.54	38.52	49.6	60.57

Symbol

Symbol	Definition	Symbol	Definition	Symbol	Definition	Symbol	Definition
An (n = 1~6)	Correction value ofr moment center distance(mm)	Ma (Map, May, Mar)	Allowable atatic moment(Pitch,Yaw,Roll)(N.m)	W	Static load(kg)	υ	Allowable moment coeficient
E	Kinetic energy(J)	Me (Mep, Mey)	Kinetic moment(Pitch,Yaw)(N.m)	Wa	Allowable static load(kg)	δ	Damper coeficient
Ea	Allowable kinetic energy(J)	Mea (Meap, Meay)	Allowable kinetic moment(Pitch,Yaw)(N.m)	Me	Load equivalent to dolision(kg)	k	Work mounting coeficient
Emax	Max. allowable kinetic energy(J)	Mmax (Mpmax, Mymax, Mmax)	Max. allowable kinetic moment(Pitch,Yaw,Roll)(N.m)	Wmax	Max. allowable static load(kg)		
Ln (n = 1~3)	Overhang (mm)	V	Coilision spped(mm/s)	α	Load rate		
M (Mp, My, Mr)	Static moment(Pitch,Yaw,Roll)(N.m)	Va	Average speed(mm/s)	β	Allowable moment coeficient		

Series NLCD / Precautions

Selection

⚠ Caution

① Do not apply a load over the operating limit range.

Select the model considering max. allowable load and allowable moment. Refer to for the details. When actuator is used outside of operating limits, eccentric loads on guide will be in excess this causing vibration on guide and inaccuracy, and shortens life.

② If intermediate stops by external stopper is done, avoid ejection.

If ejection occurs, it may cause damage. In case the slid table is stopped at intermediate positions by an external stopper then forwarded to the front, return the slide table to the back for just a moment to retract the stopper, then supply pressure to the opposite port to operate slide table.

③ Do not apply excessive forces and impacts.

This will cause problems and possible failure.

Mounting

⚠ Caution

① Do not scratch and dent mounting side of body, table and end plate.

The damage will result in a decrease in parallelism, vibration of guide and an increase in moving part resistance.

② Do not scratch and dent forward side of rail and guide.

This causes vibration and increases moving part resistance.

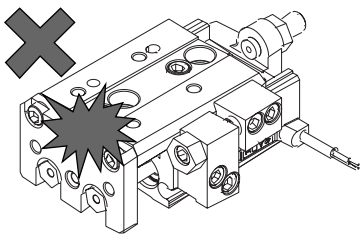

Mounting

⚠ Caution

③ Do not apply excessive power and load when is mounted.

Vibrations on guide and moving part resistance will result when power over the allowable moment is applied.

④ Flatness of mounting surface should be less than 0.02mm.

Insufficient flatness of workpiece or base to which Air Slide Table is mounted can cause generation of play at guide section or increase sliding resistance.

⑤ Select the proper connection with the load which has external support and/or guide mechanism on the outside, and align it properly.

⑥ Avoid contact with the air slide table during operation.

Adjuster option creates additional pinch points which can cause injury to operator when table is moving. Preventative measures, e.g. installation of a cover, should be taken to avoid such accidents.

⑦ Keep away from objects which is influenced by magnets.

A magnet is built in the guide block for use with an auto switch, there for do not use magnetic disk, magnetic card, or magnetic tape, else data will be eliminated.

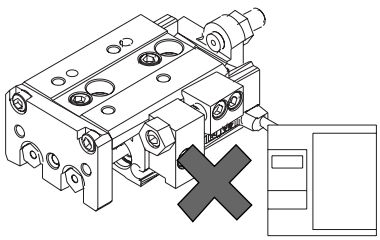

Mounting

⚠ Caution

⑧ When mounting an air slide table, use appropriate length of screws and do not exceed the maximum tightening torque.

If tightening the screw beyond the designated value, it may malfunction. If tightening it insufficient, it may result in position sliding or falling off of air slide table.

Mounting

⚠ Caution

1. Lateral mounting (Body tapped)

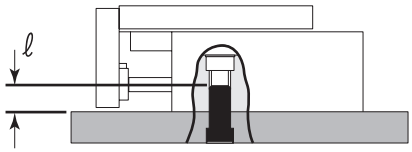

Model	Bolt	Max. Torque N.m(kg.cm)	Max. screw-in depth (ℓ mm)
NLCD06	M4×0.7	2.1(21.4)	8
NLCD08	M4×0.7	2.1(21.4)	8
NLCD12	M5×0.8	4.4(44.9)	10
NLCD16	M6×1	7.4(75.5)	12
NLCD20	M6×1	7.4(75.5)	14
NLCD25	M8×1.25	18(180)	17

2. Lateral mounting (Through hole)

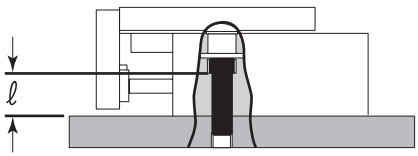

Model	Bolt	Max. Torque N.m(kg.cm)	Max. screw-in depth (ℓ mm)
NLCD06	M3×0.5	1.2(12.2)	9
NLCD08	M3×0.5	1.2(12.2)	11
NLCD12	M4×0.7	2.8(28.6)	15
NLCD16	M5×0.8	5.7(58.1)	17.5
NLCD20	M5×0.8	5.7(58.1)	26
NLCD25	M6×1	10(100)	33

3. Axial mounting (Body tapped)

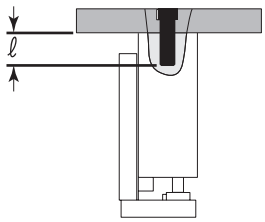

Model	Bolt	Max. Torque N.m(kg.cm)	Max. screw-in depth (ℓ mm)
NLCD06	M2.5×0.45	0.5(5.1)	5
NLCD08	M3×0.5	0.9(9.2)	5
NLCD12	M4×0.7	2.1(21.4)	9
NLCD16	M5×0.8	4.4(44.9)	9
NLCD20	M5×0.8	4.4(44.9)	9
NLCD25	M6×1	7.4(75.5)	9

Mounting

⚠ Caution

1. Front face mounting

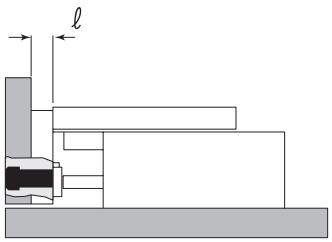

Model	Bolt	Max. Torque N.m(kg.cm)	Max. screw-in depth (ℓ mm)
NLCD06	M3×0.5	0.9(9.2)	5
NLCD08	M4×0.7	2.1(21.4)	6
NLCD12	M5×0.8	4.4(44.9)	8
NLCD16	M6×1	7.4(75.5)	10
NLCD20	M6×1	7.4(75.5)	13
NLCD25	M8×1.25	18(180)	15

2. Top face mounting

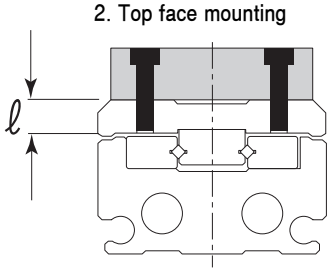

Model	Bolt	Max. Torque N.m(kg.cm)	Max. screw-in depth (ℓ mm)
NLCD06	M3×0.5	0.9(9.2)	5
NLCD08	M3×0.5	0.9(9.2)	5.5
NLCD12	M4×0.7	2.1(21.4)	7
NLCD16	M5×0.8	4.4(44.9)	9
NLCD20	M5×0.8	4.4(44.9)	9.5
NLCD25	M6×1	7.4(75.5)	11.5

The positioning hole on the table and the positioning hole at the bottom of the body do not have the same center.
Use these holes during reinstallation after the table has been removed for the maintenance of an identical product.

Environment

⚠ Caution

① Do not use in atmosphere where the actuator contacts directly the liquid such as cutting oil.
Conditions where the cylinder piston rod and guide shafts are exposed directly to cutting oil, coolant and oil mist lead to vibration, increase of moving part resistance, air leakage, etc.

② Do not use in atmosphere where the actuator contacts directly the material such as powder dust, dust, spatter etc.
This causes vibration, increase of moving part and air leakage. Consult TPC when the use in such environment is required.

③ Do not use in direct sun light.

④ Do not use in environment where there is heat source.
Use a cover when there is a heat source around the actuator, or if temperature of product increases and exceeds operating temperature range by emissive heat.

⑤ Do not subject it to excessive vibration and/or impact.
This results in damages and/or malfunction. Contact TPC if the actuator is used in the above conditions.

Precautions for Adjuster Option

Stroke adjuster

⚠ Caution

① Never replace the original adjuster bolts.
Impact energy causes play, damages, etc.

② Refer to the below table for lock nut tightening torque.
If the lock nut is not tightened sufficiently, it leads to low positioning accuracy.

Model	Tightening Torque N.m(kg.cm)
NLCD06	3.0 (30.6)
NLCD08	5.0 (51.0)
NLCD12	12.5 (128)
NLCD16	25.0 (255)
NLCD20	43.0 (439)
NLCD25	69.0 (704)

Precautions for Adjuster Option

Stroke adjuster

⚠ Caution

③ When stroke adjuster is adjusted, do not hit the table with the wrench.
This can cause excessive play.

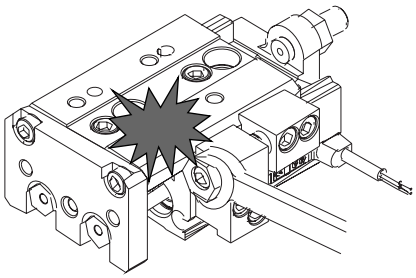

With Shock absorber

⚠ Caution

① Do not rotate the screw set on bottom of shock absorber.
This is not the screw for adjusting, If this screw is rotated, it may cause oil leakage.

② Do not scratch the exposed portion of the piston rod.
Decrease in life or malfunction may result.

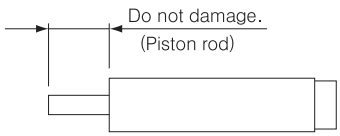

③ Shock absorber is considered a consumable component. When energy absorption is decreased, replace it.

Model	Part No. of Shock absorber
NLCD08	5.0 (51.0)
NLCD12	12.5 (128)
NLCD16	25.0 (255)
NLCD20	43.0 (439)
NLCD25	69.0 (704)

④ Refer to the below table for tightening torque for lock nut of shock absorber.

Model	Tightening Torque N.m(kg.cm)
NLCD08	1.67 (17.1)
NLCD12	
NLCD16	3.14 (32.1)
NLCD20	10.8 (110.2)
NLCD25	

Products Series Index

ITEM		PAGE
Series ADMKW	Direct Mount Cylinder; ø Non-Rotating Rod/Double Rod	A-238
Series ADMK	Direct Mount Cylinder;Non-Rotating Rod	A-235
Series ADMW	Direct Mount Cylinder;Double Rod	A-232
Series ADM	Direct Mount Cylinder;Single Rod	A-229
Series ADR	Double Rod Cylinder	A-242
Series AMR	Magnet Type Rodless Cylinder	A-251
Series ARD	Round Cylinder	A-158
Series AST	Stopper Cylinder	A-259
Series AMK	Non-Rotating Rod Type Cylinde	A-117
Series AMW	Double Acting/Double Rod	A-119
Series AM	Air Cylinder	A-108
Series AM2	Air Cylinder	A-128
Series ADQCP	Cmpact Cylinder for Intense-Magnefism Resistant Auto Switch	A-207
Series ADQKW	Non-Rotating Rod/Double Rod	A-200
Series ADQK	N0n-Rotating Rod/Single Rod	A-195
Series ADQW	Double Acting /Double Rod	A-198
Series ADQ	Single Acting/Single Rod	A-189
Series ADQ	Double Acting /Single Rod	A-194
Series AJ	Clamp Cylinder	A-162
Series AJM	Clamp Cylinder/With Intense-Magnetism Resistant Auto Swith	A-167
Series AXK	Non-Rotating Rod Type/Single Acting Spring Return Spring Extended	A-63
Series AXK	Non-Rotating Rod Type/Double Acting/Spring Rod	A-71
Series AXRK	Non-Rotating Rod Direct Mount Type	A-86
Series AXR	Direct Mount Type Cylinder	A-80
Series AXW	Double Acting /Double Rod	A-42
Series AX	Double Acting/Single Rod	A-21
Series ASK	Non-Rotating Rod Type Cylinder	A-101
Series ASW	Double Acting/Double Rod	A-99
Series AS	Air Cylinder	A-90
Series ACP	Double Acting/Double Rod	A-03
Series ACPS□□-□S	Single Acting/Spring Return Type	A-13
Series ACPS□□-□T	Single Acting/Spring Extended Type	A-13
Series ACPW	Double Acting/Single Rod	A-09
Series AQKW	Non-Rotating Rod/Double Rod	A-183
Series AQK	Non-Rotating Rod/Single Rod	A-178
Series AQW	Double Acting /Double Rod	A-181
Series AQ	Compect Cylinder:Single Acting	A-171
Series AL/ALX	Large Bore Size Type Cylinder	A-138
Series ALW/ALXW	Double Rod End Type	A-152
Series AGX/GX	Guide Cylinder/Guide Unit	A-224
Series AG	Compact Guide Cylinder	A-214

Directional Control Valve

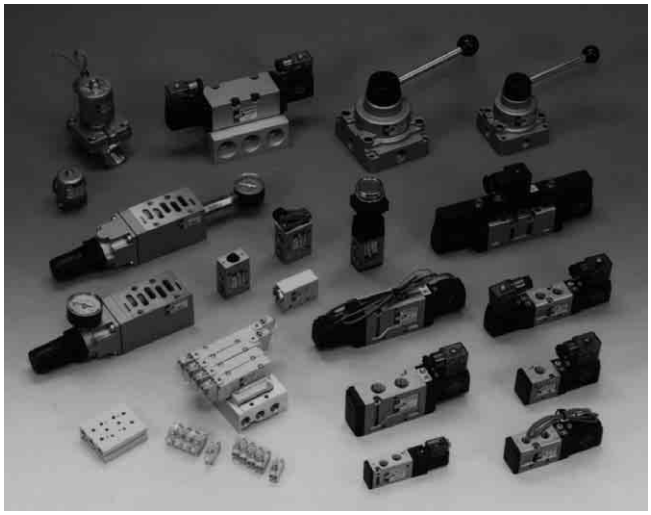

Solenoid Valve

Body Ported Type
- 2 Port Series DW B-3
- 3 Port Series DS300 ..... B-34
- 5 Port Series DV1000, 3000, 4000 ..... B-11
  - Series DS2000 ..... B-58
  - Series DS3000 ..... B-37
  - Series DS5000 ..... B-43

Base Mounted Type
- 3 Port Series DV100 ..... B-8
- 5 Port Series DV1000, 3000, 4000 ..... B-17
  - Series DS3000 ..... B-53
  - Series DS6000 ..... B-63
  - Series DX2 ..... B-68

Air Pilot Valve

Body Ported Type
- 3 Port Series DP300 ..... B-50
- 5 Port Series DP3000 ..... B-50
  - Series DP5000 ..... B-50

Base Mounted Type
- 5 Port Series DP3000 ..... B-50

Mechanical Valve

- 3 Port Series DM230 ..... B-80
  - Series DM330 ..... B-83
- 5 Port Series DM450 ..... B-85
  - Series DM550 ..... B-97

Hand Valve

- Series DH200 ..... B-78
- Series DH300 ..... B-78
- Series DH400 ..... B-78

Other Valve

OR Valve
- Series DT220 ..... B-89

Check Valve
- Series DC B-90

2 Port Solenoid Valve

Series DW

- ●WIDER RANGE OF OPERATING PRESSURE
  - 0 ~ 7 kgf/cm²(DW03)
  - 0 ~ 10 kgf/cm²(DW10,15)
  - 0.3 ~ 10 kgf/cm²(DW20, 25)
- ●HIGH FLOW CAPACITY
- ●LOW WATTAGE SOLENOID
- ●CAN BE MOUNTED IN ANY PLACE

Symmbol

Direct Type

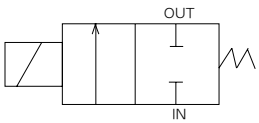

Pilot Type

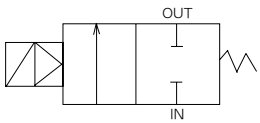

How to Order

DW 10 — 1 C — 01

1 2 3 4 5

1 Rc(PT)2 Port Solenoid Valve Applicable Fluid (Water, Air, Oil)
※Option:Steam

2 Body(Orifice Size)
- 03 : ø2.5-Direct Type Solenoid
- 10 : ø10
- 15 : ø15
- 20 : ø20
- 25 : ø25

Pilot Type Solenoid

3 Voltage
- 1 : AC100V, 50/60㎐
- 2 : AC200V, 50/60㎐
- 5 : DC24V
- 9 : Others

4 Electric Connection
- G : Grommet (only Rc(PT) 1/8)
- C : Conduit

5 Port Size Rc(PT)
- 01 : Rc(PT) 1/8
- 02 : Rc(PT) 1/4
- 03 : Rc(PT)3/8
- 04 : Rc(PT) 1/2
- 06 : Rc(PT) 3/4
- 10 : Rc(PT)1

Standard Specifications

Applicable			Air, Water, Oil
Proof Pressure			15kg/cm²{1.5MPa}
Fluid Temperature			0~70°C
Temperature Rise			Max. 60°C
Electrical Entry			Grommet, Conduit
Actuation Type			Direct or Pilot Solenoid
Valve Type			Normal Close
Seat Type			Poppet
Rated Voltage	AC (50/60㎐)		100V, 200V
	DC		24V
Allowance Voltage Range			Rated Voltage ±10%
Coil Insulation			Class B or Equivalent(110℃)
Power Consumption	AC	Inrush	17VA (60㎐)
		Holding	15VA (60㎐)
	DC		11W

TPC PNEUMATICS

Applicable Specifications

Coil Apparent Power	AC110, 220V(50/60㎐)
	DC 6, 12V
Body Material	Stainless steel(SCS13)
Coil Insulation	H Class(180°C)
	AC100, 110, 200, 220V

Model

Type	Port (Size)	Pressure	Orifice Size (ø mm)	Effective Orifice (mm^2)	Weight (kgf)
DW03-*G-01	RC(PT)1/8(6A)	0~7 kgf/cm^2 {0~0.7MPa}	2.5	6	0.3
DW03-*G-02	RC(PT)1/4(8A)		2.5	6	0.3
DW10-*C-02	RC(PT)1/4(8A)	0~10 kgf/cm^2 {0~1MPa}	10	34	0.5
DW10-*C-03	RC(PT)3/8(10A)		10	43	0.5
DW15-*C-04	RC(PT)1/2(15A)		15	160	0.7
DW20-*C-06	RC(PT)3/4(20A)	0.3~10 kgf/cm^2 {0.03~1MPa}	20	170	0.9
DW25-*C-10	RC(PT)1(25A)		25	225	1.2

Direction Type

Unit:mm

DW□03-□G-01/02

Symbol

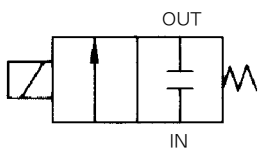

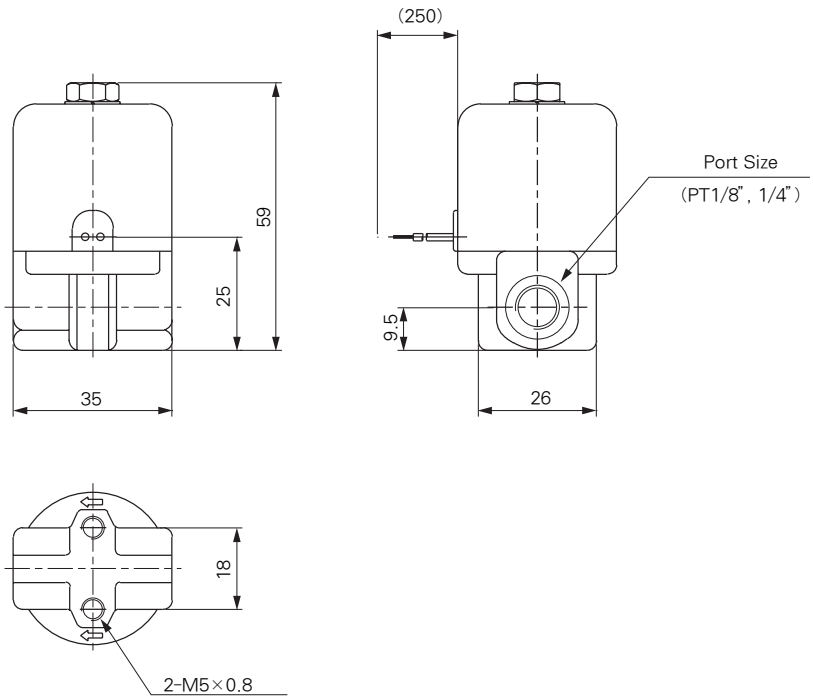

Pilot Type

Unit:mm

DW 10 - □C- 02 / 03

Symbol

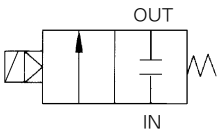

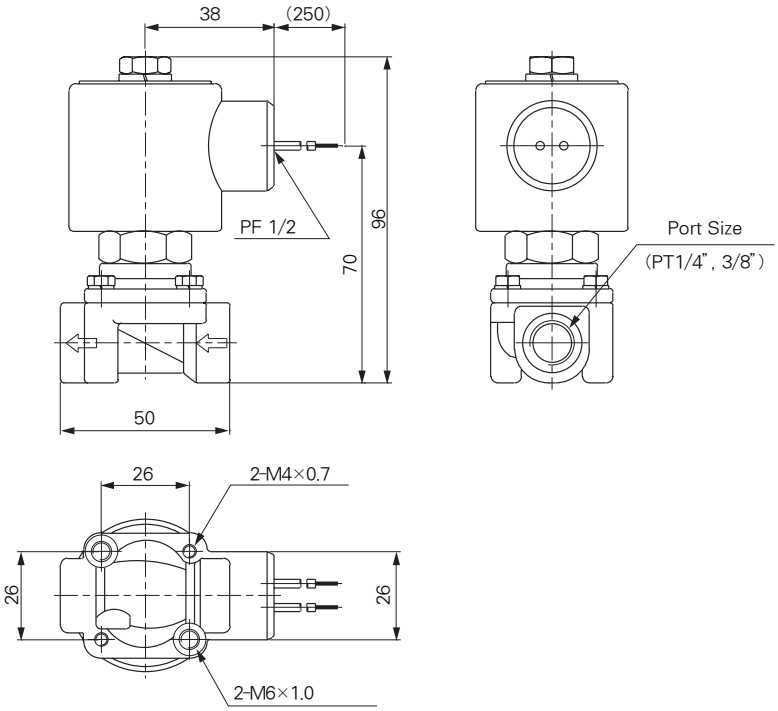

Pilot Type

Unit:mm

DW15 - □C - 04

Symbol

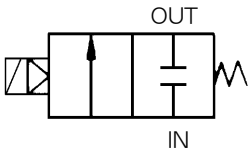

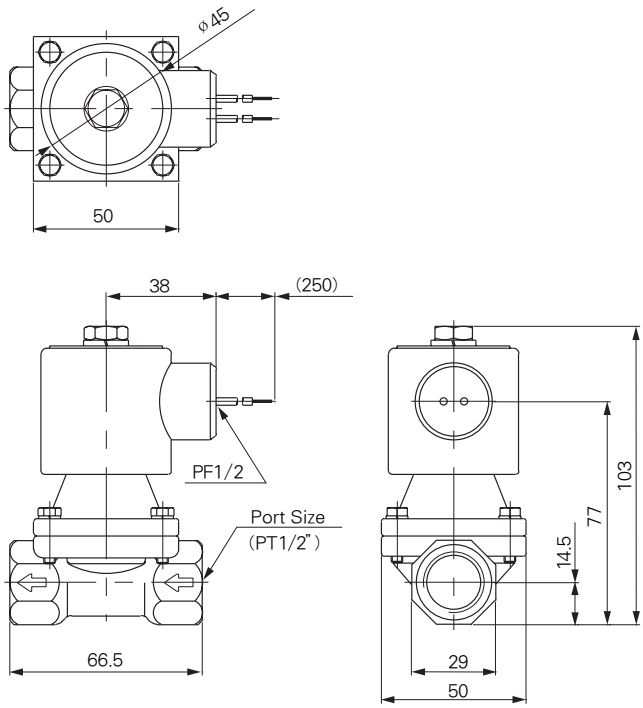

Pilot Type

Unit:mm

DW 20 - □C - 06
DW 25 - □C - 10

Symbol

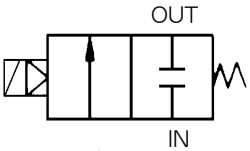

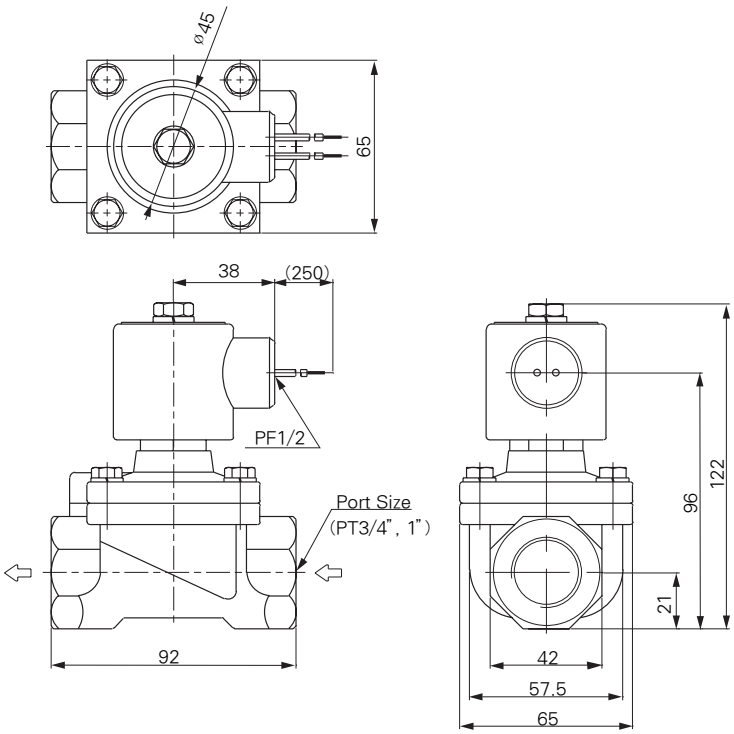

Precautions

Piping

❶ Piping should be thoroughly flushed to remove sludge, cutting oil, and dust.
❷ During piping and coupling connection, care should be taken to prevent contamination by cut thread chips or sealing materials.(When applying sealing tape to threads, one screw thread should extend beyond the tape.)
❸ Pay attention to the piping direction(IN, OUT). IN or other marks are indicated on the inlet side.
❹ The coil should not be subjected to an extended force. When tightening, apply a wrench to the outside of the pipe mounting area only.
❺ The piping system should not be grounded. Grounding would cause electrolytic corrosion.
❻ To prevent collection of fluid within the piping circuit, install a relief valve within the circuit.

Wiring

❶ The minimum diameter for wire connection is 0.5mm^2 .
❷ An electric circuit which prevents chattering at the point of contact should be employed.
❸ When the electric is apt to be damaged by surge voltage, place a surge suppressor in parallel with the solenoid valtage suppressor (option).
❹ The allowable votage range is -10%～+10% of the rated voltage. However, if great response is desired for DC power, the voltage range should be within ±5% of the rated voltage. Voltage drop is measured at a part of the lead wire connected to the coil.
❺ The voltage found on both ends of the coil, when it deenergizes, is:AC:20% or less of the rated voltage DC:2% or less of the rated voltage
The DC value is for a temperature of 20±5℃. At lower temperatures, the DC value will be lower.

Mounting

❶ The solenoid valve may be mounted in any orientation.
When mounted upside down, however, foreign material in the fluid is liable to adhere to the iron core. Avoid such a mounting method. Mount the valve with its coil facing up.

❷ Do not keep coil assemblies warm with insulating material, etc. It will cause the coil to burn out. Antifreezing tape, heater, etc., should be applied to piping and body areas only.

❸ Do not place the valve in areas of severe vibration. If it is unavoidable, shorten the arm to a minimum to avoid resonance.

Storage

Long time storage after using the valve for water will require complete removal of moisture in order to prevent corrosion and deterioration of rubber parts.

Long Period Energization or Deenergization

The valve switching period depends on the type and quality of the fluid. When pure water is taken as a standard, the valve should be switched at least once every 10 days. If the cycle is greater than 10 days, a system check mechanism should be installed. The valve is not intended to be used as an emergency Circuit breaker Specify operational conditions for use under conditions similar to that.

Fluid Temperature

Refer to the temperature range for each model. The temperature range changes according to the sealing material, coil insulation, power, supply, etc. Contact our representative for use other than standard use.

Applicable Fluid

❶ Fluid Classification
When selecting a valve for your application, ensure the compatibility of the fluid and valve materials. Generally, the recommended viscosity of fluid is 50cSt max.
For futher details, contact our representative.
〈Reference〉 Standard materials
Body:Brass or BC6 Seal:NBR, Coil:Insulation Type B.
These are for water, air, and oil use. For materials other than standard, refer to the "Option list" and "Applicable fluid check list." The specifications may be slightly different.

❷ Fluid Quality
Fluid mixed with foreign material can promote wear of the valve seat and iron core. Adhesion of foreign particles to the iron core and sliding section can cause degraded function of the valve or sealing trouble. To prevent this, place a filter(strainer)immediately in front of the solenoid valve. In general, a mesh of 80~100 is recommended.

❸ Lubricant
Our solenoid valves do not need lubrication. However, lubricated air will increase their life.

❹ In using inflammable oil and gas, prevention of leakage both inside and outside of the valve should be exercised.

❺ In case oil and other impurities are not allowed in the fluid, use nonlube treated parts.

❻ Under conditions near the limit of valve operation, the option and fluid may not be applicable as they are since only general applications are shown, check actual conditions on your own for appropriate selection.

3Port Pilot Solenoid Valve

Series DV100

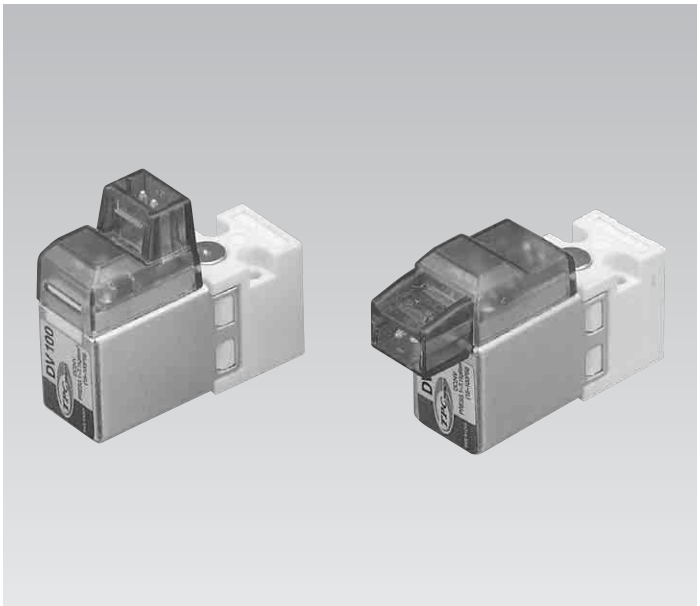

- Low Power Consumption / 1.0WDC
- Compact Space-Ø Saving Design
- Large Flow Capacity 0.18mm²(Cv0.01)

Symbols

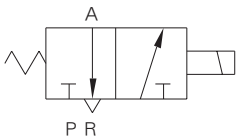

2position / single

How to order

DV100 — **5** **H** — **M3**

1 2 3 4

1 Series DV100
10mm Body

2 Valtage
- ＊1 : AC110V (Option)
- ＊2 : AC220V (Option)
- 5 : DC24V (standard)
- 6 : DC12V (Option)
- ＊Made to Order : Contact TPC for further specifications, dimensions and delivery lead time.

3 LEAD Electrical Entry
- H : Horizontal (DC TYPE)
- V : Vertical

4 Option
- Blank : Without Subplate
- M3 : With Subplate

※ It is standard to attach the LAMP/SURGE voltage protection cirtcuit. (Products without a LAMP or SURGE voltage protection circuit should be contacted separately)

Model

Model	Actuation	Port size	Effective Orifice mm² (Cv Factor)
DV100-5(H,V)-＊＊	NORMAL CLOSE (NC)	M5X0.8	0.17(0.009)

COIL Insulation

Insulation Form	Temperature (°C)
A Type	~ 65
E Type	~ 80
B Type (Basic Type)	~ 90
F Type	~ 115
H Type	~ 140

- Values represented in this catalog are not guaranteed but for reference.

Construction

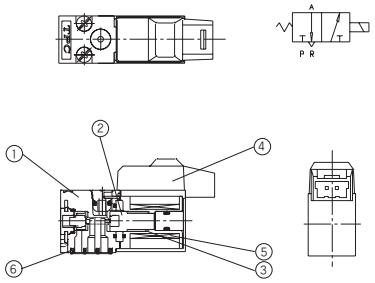

Horizontal Connector Type

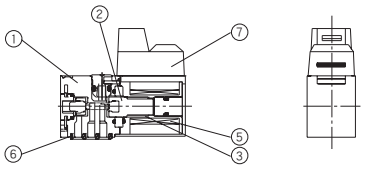

Vertical Connector Type

Specifications

Fluid		Air
Operating Pressure Range		0~7kgf/cm²{0~0.7MPa}
Acting		N.C
Amibient and Fluid Temperature(°C)		5~50
Voltage Allowance (%)		-10~+10 of Rated Voltage
Maximum Operation Frequency(C/S)		10
Minimum Operation Frequency		30days per one session (Only in the case of a KS B 6356)
Lubrication		Not Reguired(ISO VG32)
Impact / Vibration Resistance (m/s²)		30G / 5G
Mounting Position		Free
Manual Override		Non Locking Push Type
LEAD Electrical Entry		Horizontal(H), Vertical(V)
Indicator light and Surge Voltage Suppressor		LED/Surge Voltage Suppressor Standard
Voltage (V)		AC100*, AC220*, DC24
Effective Area mm²(Cv)		0.18(0.01)
Power Consumption (W)	DC (W)	1.0 (with LAMP)
	AC (VA)	110V : 1.4, 200V : 2.3
Response Time/ms		10ms or less (At 5kgf/cm², on Time)

* Made to order

Parts List

No.	Description	Material	Notea
❶	Body	PBT	
❷	Armature	-	
❸	Bobbin	-	
❹	Lamp case	Resin	
❺	Coil	-	
❻	Gasket	NBR	
❼	Lampcase -V	Resin	

Dimensions

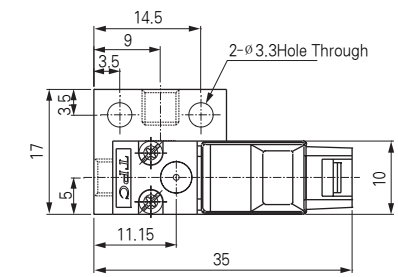

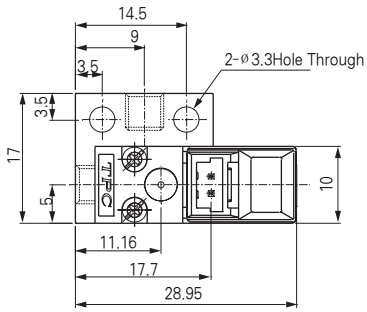

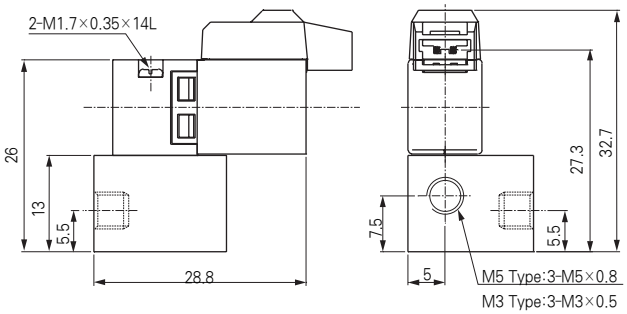

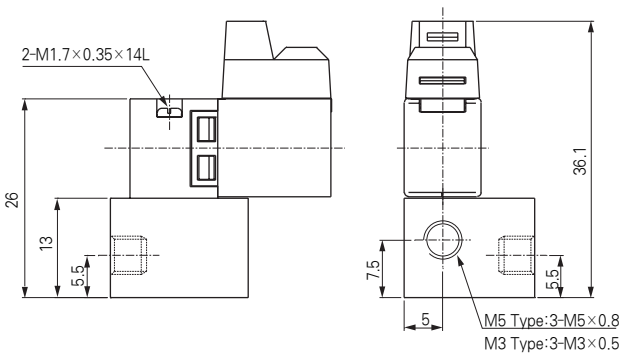

Manifold

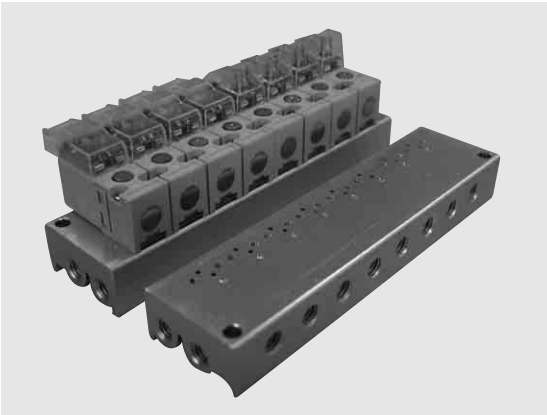

How to Order

DVM100 — 40 — 05

1 — 2 — 3

1 Series DV100 Manifold
10mm Body Size Valve

2 Manitold Specifications
40 : Base Mounted

3 Stations
01 : 1 Stations
02 : 2 Stations
03 : 3 Stations
⋮
10 : 10 Stations
⋮

* other 10 over Stations can be manufactured upon receipt of order.

Dimensions (DVM100)

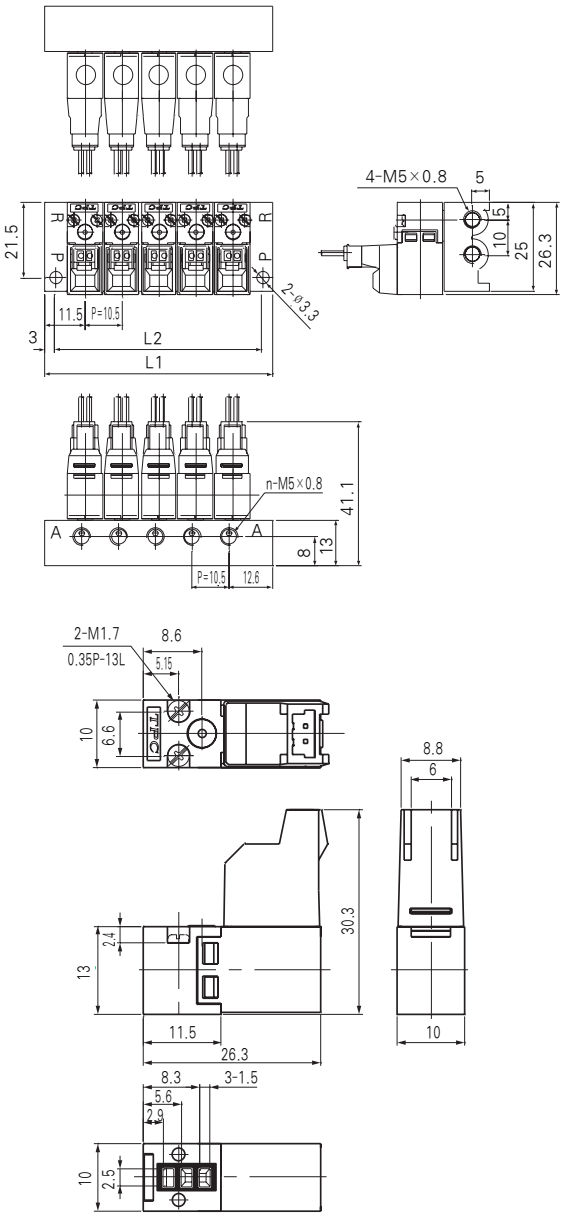

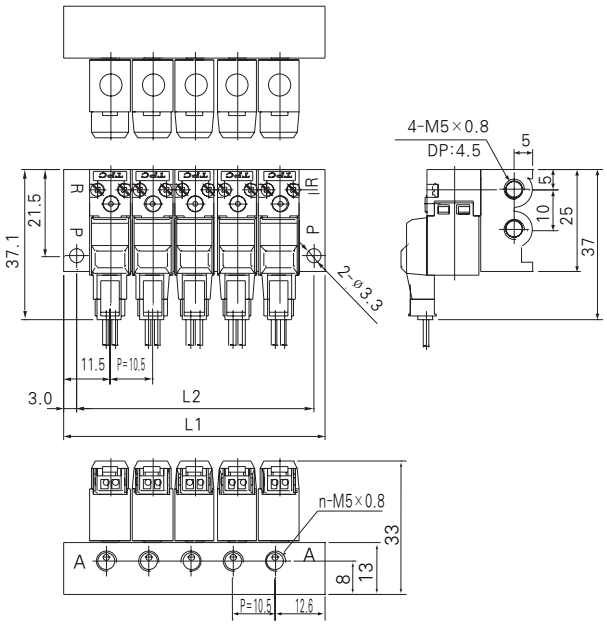

(n = stations)

L : Size

n	2	3	4	5	6	7	8	9	10
L1	33.5	44	54.5	65	75.5	86	96.5	107	117.5
L2	27.5	38	48.5	59	69.5	80	90.5	101	111.5

Series DV1000 · 3000 · 4000

5Port Pilot Solenoid Valve

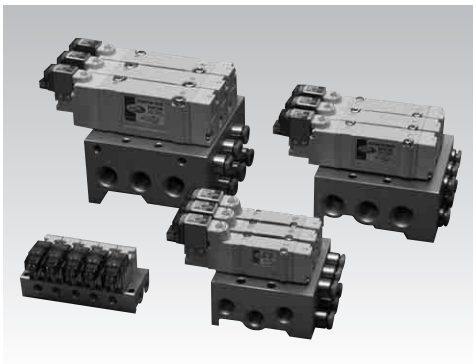

- **Quick response time & large flow capacity**
  - Response time of less than 12ms (At standard DV1000)
  - Increase in effective cross sectional area (It is increased approximately 2.5 times compared with the same level series from before)
  - Low consumer electric power 1.0W (240V, 41mA)
- **High Reliability**
  - Long life
  - Wear Ring attached → The spool side prevents abrasion
  - Uses U Packing → Minimizes frictional resistance
  - In the case of restoration, select the Piston Return mode
- **Changing the exterior to a 'state of the art' design**
  - White color tone → changing the exterior to a 'state of the art' design
  - Elegant compact size and exterior
- **Product diversity**
  - Easy wiring with a basic nonpolar coil type
  - Prevents dust and noise during the pilot exhaustion with its exhaust collection system
  - The basic type is unable to be used in the winter
  - Easy attachment of the gasket when putting it in the manifold (additional gasket protrusion figure)
  - Common use of the push & lock mode manually

How to order

DV ◯ 1 20 — ◯ H — 01

1 2 3 4 5 6

1 Valve Series
- 1 : DV1000 Series
- 3 : DV3000 Series
- 4 : DV4000 Series

2 Configuration
- 1 : Single Solenoid
- 2 : Double Solenoid
- 3 : Closed Center
- 4 : Exhaust Center
- 5 : Pressure Center

1	2 Position Single 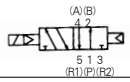
2	2 Position Double 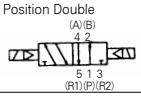
3	3 Position Closed Center 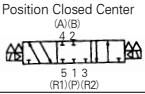
4	3 Position Exhaust Center 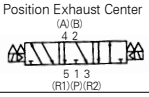
5	3 Position Pressure Cemter 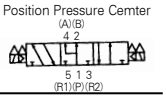

3 Manifold Specifications
- 20 : Body Ported
- 40 : Base Mounted

4 Voltage
- ＊1 : AC110V
- ＊2 : AC220V
- 5 : DC24V
- ＊6 : DC12V
- ＊ : Option

5 Electrical Entry
- H : Horizontal
- V : Vertical

6 Port Size
- Blank : No Sub Plate
- M5 : M5×0.8 (Series DV1000)
- 01 : Rc(PT)1/8 (Series DV3000)
- 02 : Rc(PT)1/4 (Series DV4000)

※ When using the TPC valve be sure to use the TPC gasket
※ It is standard to attach the LAMP/SURGE voltage protection circuit. (Products without a LAMP or SURGE voltage protection circuit should be contacted separately)

Body Ported

Valve Model	Configuration		Port Size	Weight(g)
DV1◯20 - ◯ - M5	2Position	Single	M5×0.8	52
		Double		64
	3Position	Closed Center		68
		Exhaust Center		68
		Pressure Center		68
DV3◯20 - ◯ - 01	2Position	Single	Rc(PT)1/8	120
		Double		134
	3Position	Closed Center		142
		Exhaust Center		142
		Pressure Center		142
DV4◯20 - ◯ - 02	2Position	Single	Rc(PT)1/4	124
		Double		136
	3Position	Closed Center		144
		Exhaust Center		144
		Pressure Center		144

Base Mounted

Valve Model	Configuration		Port Size		Weight(g)
			P, R1, R2	A, B	
DV1◯40 - ◯ - M5	2Position	Single	Rc(PT) 1/8	M5×0.8	46
		Double			58
	3Position	Closed Center			62
		Exhaust Center			62
		Pressure Center			62
DV3◯40 - ◯ - 01	2Position	Single	Rc(PT) 1/4	Rc(PT) 1/8	92
		Double			106
	3Position	Closed Center			114
		Exhaust Center			114
		Pressure Center			114
DV4◯40 - ◯ - 02	2Position	Single	Rc(PT) 3/8	Rc(PT) 1/4	80
		Double			96
	3Position	Closed Center			104
		Exhaust Center			104
		Pressure Center			104

Construction

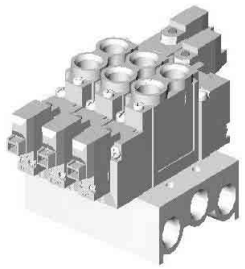

Body ported (DV ∗∗ 20)

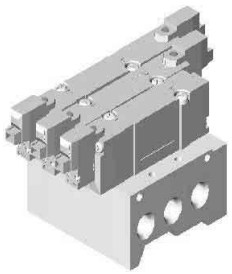

Base Mounted (DV ∗∗ 40)

Specifications

Series		DV1000	DV3000	DV4000
Acting		5 Port Pilot Type Solenoid Valve(Rubber Seal)		
Fluid		Air		
Operating Pressure Range	2Position Single	0.15~0.7MPa(1.5~7.1kgf/cm²)		
	2Position Double	0.1~0.7MPa(1~7.1kgf/cm²)		
	3 Position	0.2~0.7MPa(2~7.1kgf/cm²)		
Ambient and Fluid Temperature		Max. 50℃		
Manual Override		Push&Lock Type		
Lubrication		Not Reguired		
Mounting Position		Free		
Impact/Vibration Resistance(m/s²)		150/30(8.3~2000Hz)		
Max. Operating Frequency	2Position	10	5	5
	3 Position	3	3	3
Piotection Structure		Dust proof (DIN connector 1965)		
Lead Electrical Entry		Connector Mounting Type(H:Horizontal, V:Vetical)		
Voltage		DC24V, AC110V*, AC220V*		
Voltage Allowance		-10~+10% of Rated Voltage		
Polarity		Non-polar (standard)		
Response Time(ms)	5kgf/㎠	~12ms	~18 ms	~30ms
Power Consumption(W)		1.0(Indicator Light and Surge suppressor)		
Effective Orifice	Single	3.6mm²(Cv0.2)	9.0mm²(Cv0.5)	16.2mm²(Cv0.9)

∗ : Option

Series DV1000 · 3000 · 4000 Body Ported Type Effective Orifice and Reponse Time

Type	Valve Model	Port Size Rc(PT)	Configuration		Operating Pressure Range Mpa(psi)	Effective Orifice (mm²)(Cv)	Response Time (ms)
5PORT Body Ported	DV 1120	M5	2	Single	0.15~0.70 (20~100)	3.6 (0.20)	12
	DV 1220			Double	0.10~0.70 (14~100)	3.6 (0.20)	10
	DV 1320		3	Closed Center	0.20~0.70 (27~100)	3.3 (0.18)	16
	DV 1420			Exhaust Center	0.20~0.70 (27~100)	3.3 (0.18)	16
	DV 1520			Pressure Conter	0.20~0.70 (27~100)	3.6 (0.20)	16
	DV 3120	Rc(PT) 1/8	2	Single	0.15~0.70 (20~100)	9.0 (0.50)	18
	DV 3220			Double	0.10~0.70 (14~100)	9.0 (0.50)	18
	DV 3320		3	Closed Center	0.20~0.70 (27~100)	7.2 (0.40)	32
	DV 3420			Exhaust Center	0.20~0.70 (27~100)	7.2 (0.40)	32
	DV 3520			Pressure Center	0.20~0.70 (27~100)	9.5 (0.53)	32
	DV 4120	Rc(PT) 1/4	2	Single	0.15~0.70 (20~100)	16.2 (0.90)	30
	DV 4220			Double	0.10~0.70 (14~100)	16.2 (0.90)	30
	DV 4320		3	Closed Center	0.20~0.70 (27~100)	10.8 (0.60)	50
	DV 4420			Exhaust Center	0.20~0.70 (27~100)	10.8 (0.60)	50
	DV 4520			Pressure Center	0.20~0.70 (27~100)	17.1 (0.96)	50

DV1000 · 3000 · 4000 Base Mounted Type Effective Orifice and Reponse Time

Type	Valve Model	Port Size P, R1, R2	Port Size A, B	Configuration		Operating Pressure Range Mpa(psi)	Effective Orifice (mm²)(Cv)	Response Time (ms)
5PORT Base Mounted	DV 1140	Rc(PT) 1/8	M5×0.8	2	Single	0.15~0.70 (20~100)	4.0 (0.22)	12
	DV 1240				Double	0.10~0.70 (14~100)	4.0 (0.22)	10
	DV 1340			3	Closed Center	0.20~0.70 (27~100)	3.6 (0.20)	16
	DV 1440				Exhaust Center	0.20~0.70 (27~100)	3.6 (0.20)	16
	DV 1540				Pressure Center	0.20~0.70 (27~100)	3.8 (0.21)	16
	DV 3140	Rc(PT) 1/4	Rc(PT) 1/8	2	Single	0.15~0.70 (20~100)	9.5 (0.53)	18
	DV 3240				Double	0.10~0.70 (14~100)	9.5 (0.53)	18
	DV 3340			3	Closed Center	0.20~0.70 (27~100)	7.2 (0.40)	32
	DV 3440				Exhaust Center	0.20~0.70 (27~100)	7.2 (0.40)	32
	DV 3540				Pressure Center	0.20~0.70 (27~100)	10.0 (0.55)	32
	DV 4140	Rc(PT) 3/8	Rc(PT) 1/4	2	Single	0.15~0.70 (20~100)	16.2 (0.90)	30
	DV 4240				Double	0.10~0.70 (14~100)	16.2 (0.90)	30
	DV 4340			3	Closed Center	0.20~0.70 (27~100)	10.8 (0.60)	50
	DV 4440				Exhaust Center	0.20~0.70 (27~100)	10.8 (0.60)	50
	DV 4540				Pressure Center	0.20~0.70 (27~100)	17.1 (0.96)	50

Cylinder Speed Chart

Body Ported

Series	Cylinder speed (mm/s)	Cylinder Bore Size (mm)											
		Series ACP Pressure 0.5MPa Load factor 50% Cylinder Stroke 100mm			Series AX Pressure 0.5MPa Load factor 50% Cylinder Stroke 300mm				Series AM Pressure 0.5MPa Load factor 50% Cylinder Stroke 500mm				
		Ø 6	Ø 10	Ø 16	Ø 20	Ø 25	Ø 32	Ø 40	Ø 40	Ø 50	Ø 63	Ø 80	Ø 100
DV1120 - M5 Cv=0.20	100	■	■	■	■	■	■	■	■	■			
	200	■	■	■	■	■	■	■	■				
	300	■	■	■	■	■	■						
	400	■	■	■	■	■							
	500		■	■	■								
DV3120 - 01 Cv=0.50	100	■	■	■	■	■	■	■	■	■	■	■	
	200	■	■	■	■	■	■	■	■	■			
	300	■	■	■	■	■	■	■	■	■			
	400	■	■	■	■	■	■		■				
	500		■	■	■	■			■				
	600		■	■	■	■			■				
	700				■								
DV4120 - 02 Cv=0.90	100	■	■	■	■	■	■	■	■	■	■	■	■
	200	■	■	■	■	■	■	■	■	■	■	■	
	300	■	■	■	■	■	■	■	■	■	■	■	
	400	■	■	■	■	■	■	■	■	■	■		
	500		■	■	■	■			■	■			
	600		■	■	■	■			■				
	700				■	■							

Base Mounted (with sub-plate)

Series	Cylinder speed (mm/s)	Cylinder Bore Size (mm)											
		Series ACP Pressure 0.5MPa Load factor 50% Cylinder Stroke 100mm			Series AX Pressure 0.5MPa Load factor 50% Cylinder Stroke 300mm				Series AM Pressure 0.5MPa Load factor 50% Cylinder Stroke 500mm				
		Ø 6	Ø 10	Ø 16	Ø 20	Ø 25	Ø 32	Ø 40	Ø 40	Ø 50	Ø 63	Ø 80	Ø 100
DV1140 - M5 Cv=0.22	100	■	■	■	■	■	■	■	■	■			
	200	■	■	■	■	■	■	■	■				
	300	■	■	■	■	■	■	■	■				
	400	■	■	■	■	■							
	500		■	■	■	■							
	600		■	■	■								
	700				■								
DV3140 -01 Cv=0.53	100	■	■	■	■	■	■	■	■	■	■	■	■
	200	■	■	■	■	■	■	■	■	■	■	■	
	300	■	■	■	■	■	■	■	■	■	■		
	400	■	■	■	■	■	■	■	■	■			
	500		■	■	■	■			■	■			
	600		■	■	■	■			■	■			
	700				■	■			■				
DV4140 - 02 Cv=0.90	100	■	■	■	■	■	■	■	■	■	■	■	■
	200	■	■	■	■	■	■	■	■	■	■	■	
	300	■	■	■	■	■	■	■	■	■	■	■	
	400	■	■	■	■	■	■	■	■	■	■		
	500		■	■	■	■			■	■			
	600		■	■	■	■			■	■			
	700				■	■			■	■			

Conditions

Body Ported		Series ACP	Series AX	Series AM
DV1120 - M5 Cv=0.20	Tube bore×length	Ø4 × 1m		
	Speed controller	SP1201F-M5-04		
	Silencer	SN120-M5		
DV3120 - 01 Cv=0.50	Tube bore×length	Ø6 × 1m	Ø8 × 1m	
	Speed controller	SP1201F-M5-06	SP3201F-03-08S	
	Silencer	SN110-01		
DV4120 - 02 Cv=0.90	Tube bore×length	Ø6 × 1m	Ø10 × 1m	
	Speed controller	SP1201F-M5-06	SP3201F-04-10S	
	Silencer	SN200-02		

Base Mounted		Series ACP	Series AX	Series AM
DV1140 - M5 Cv=0.22	Tube bore×length	Ø4 × 1m		
	Speed controller	SP1201F-M5-04		
	Silencer	SN110-01		
DV3140 - 01 Cv=0.53	Tube bore×length	Ø6 × 1m	Ø8 × 1m	
	Speed controller	SP1201F-M5-06	SP3201F-03-08S	
	Silencer	SN110-01		
DV4140 - 02 Cv=0.90	Tube bore×length	Ø6 × 1m	Ø10 × 1m	Ø12 × 1m
	Speed controller	SP1201F-M5-06	SP4201F-04-10S	SP4201F-04-12S
	Silencer	SN200-02		

Construction / Body Ported

Symbol
2 Position / Single

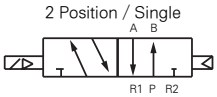

2 Position Single

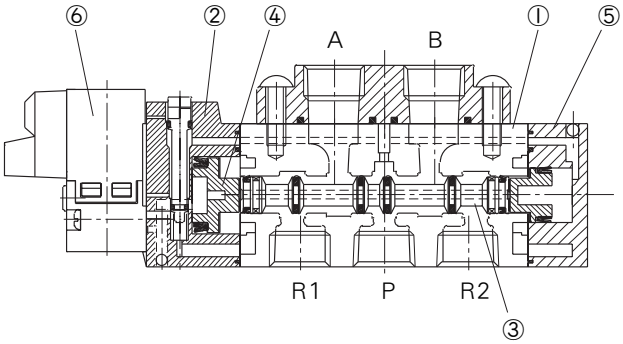

Symbol
2 Position / Double

2 Position Double

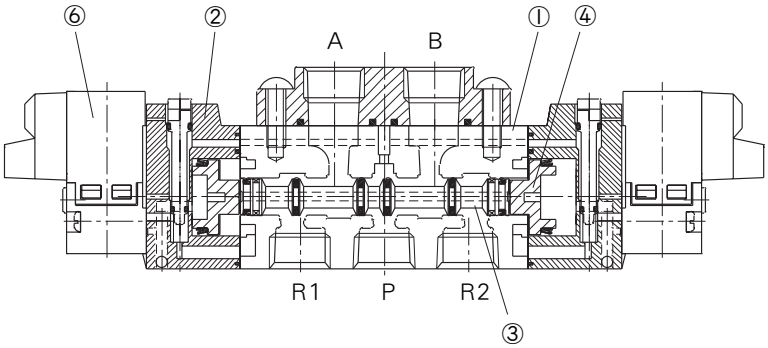

Symbol
3 Position / Closed Center

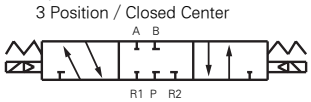

3 Position / Exhaust Center

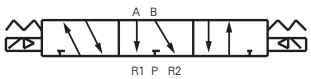

3 Position / Pressure Center

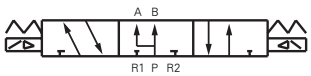

3 Position Closed Center / Exhaust Center / Pressure Center

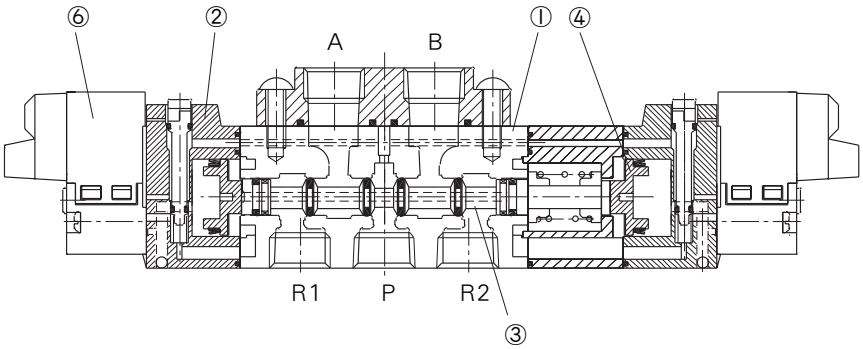

Component Ports

No.	Description	Meterial	Note
1	BODY	Aluminum Die Cast	(DV4000Aluminum Die Cast)
2	ADAPTER PLATE	Resin	
3	SPOOL	Aluminum	
4	PISTON	Resin	
5	END COVER	Resin	
6	SOLENOID ASSY.	-	

Construction / Base Mounted

Symbol
2 Position / Single

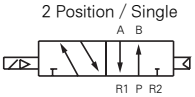

2 Position Single

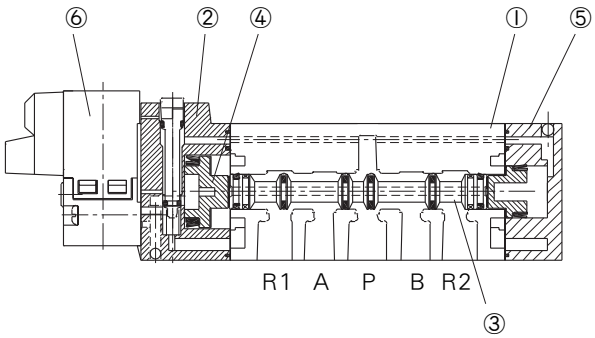

Symbol
2 Position / Double

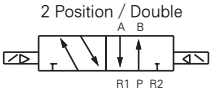

2 Position Double

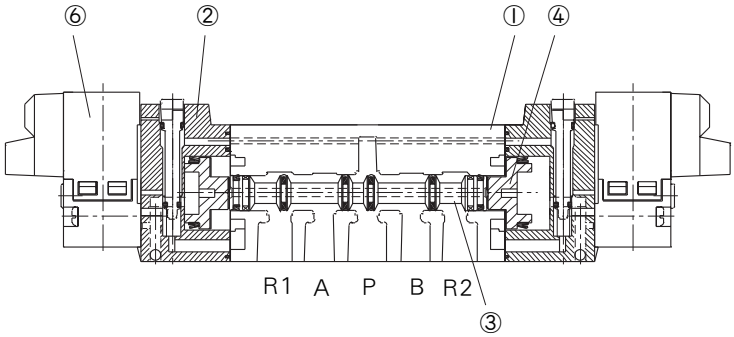

Symbol
3 Position / Closed Center

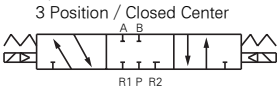

3 Position / Exhaust Center

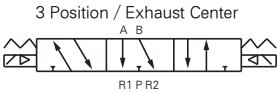

3 Position / Pressure Center

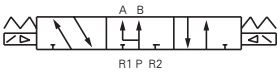

3 Postion Closed Center / Exhaust Center / Pressure Center

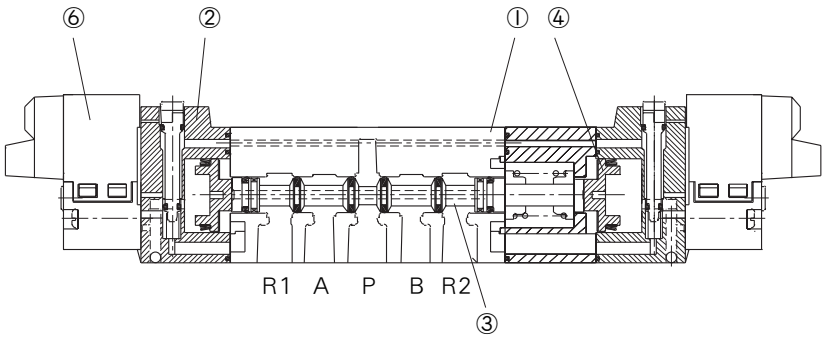

Component Parts

No.	Description	Meterial	Note
1	BODY	Aluminum die Cast	(DV4000Aluminum die Cast)
2	ADAPTER PLATE	Resin	
3	SPOOL	Aluminum	
4	PISTON	Resin	
5	END COVER	Resin	
6	SOLENOID ASSY.		

Series DV1000 / 2 Position / H: Horizontal Connector Type

DV1120 Single / Body Ported

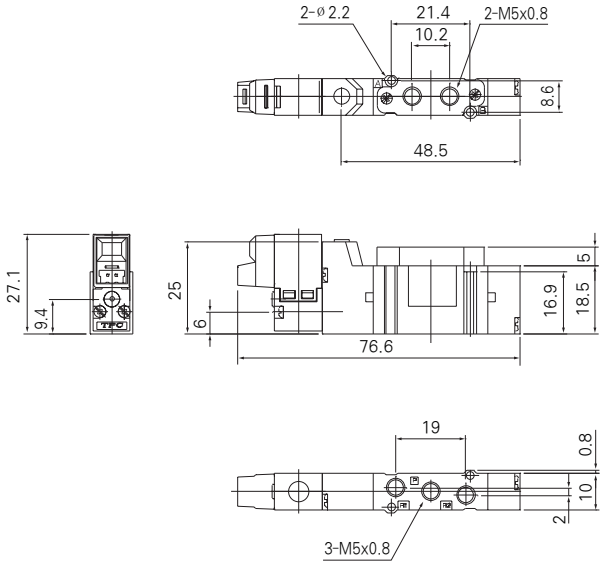

DV1140 Single / Base Mounted

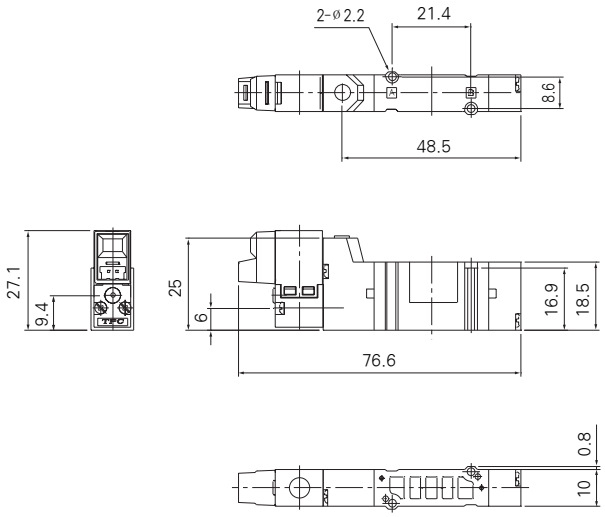

DV1220 Double / Body Ported

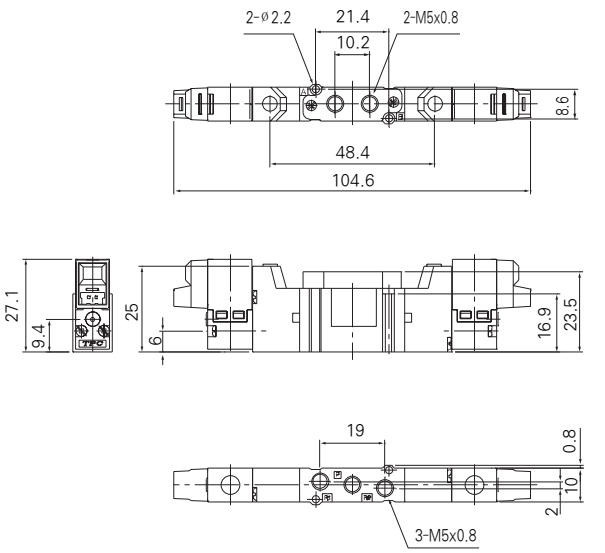

DV1240 Double / Base Mounted

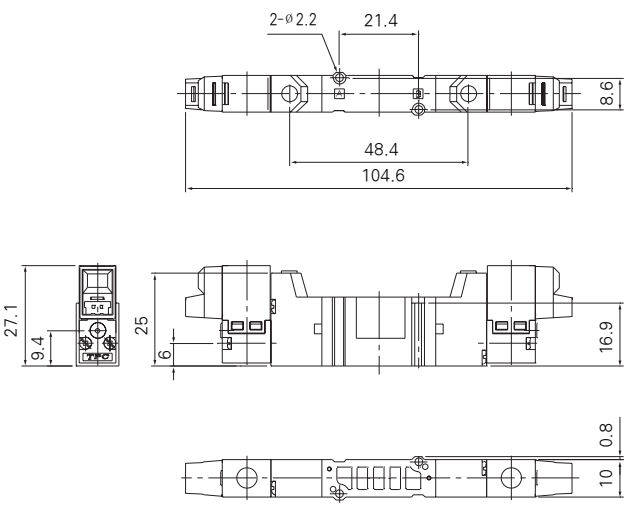

Series DV1000 / 2 Position / V: Vertical Connector Type

DV1120 Single / Body Ported

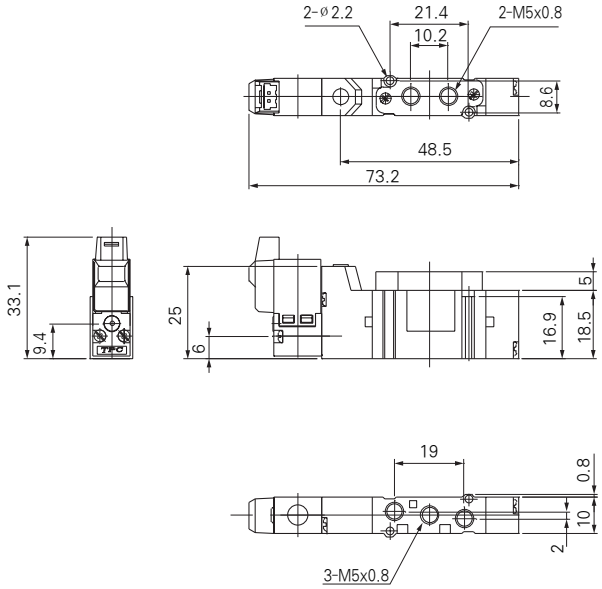

DV1140 Single / Base Mounted

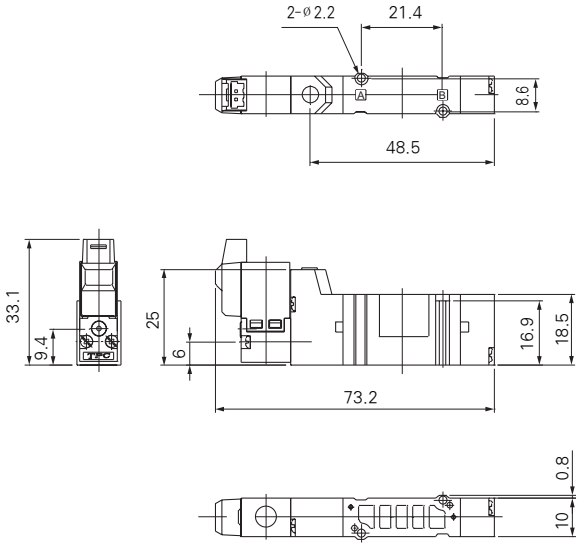

DV1220 Double / Body Ported

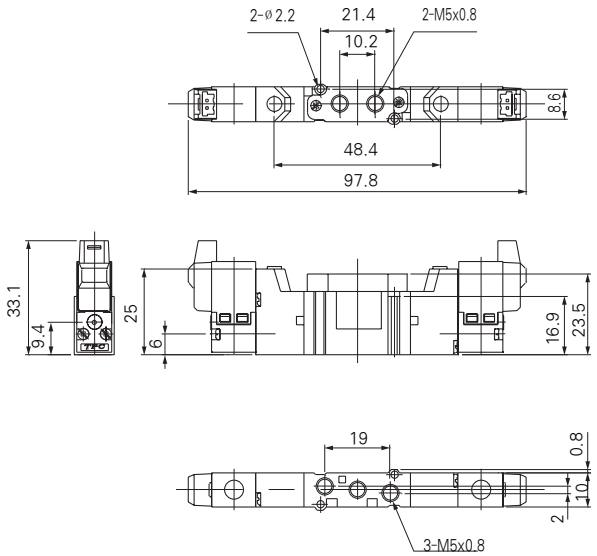

DV1240 Double / Base Mounted

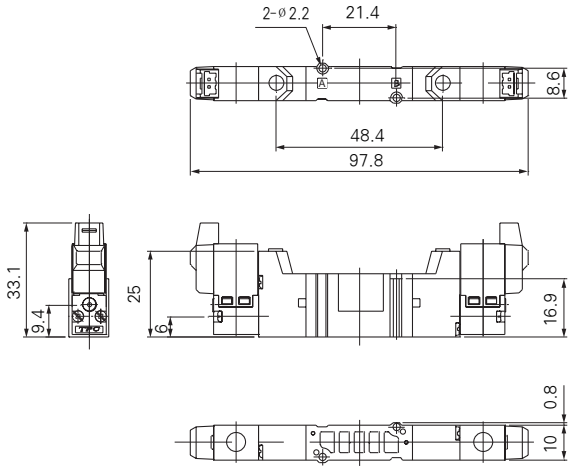

Series DV1000 / 3 Position / H: Horizontal Connector Type

DV1320 3 Position / Body Ported

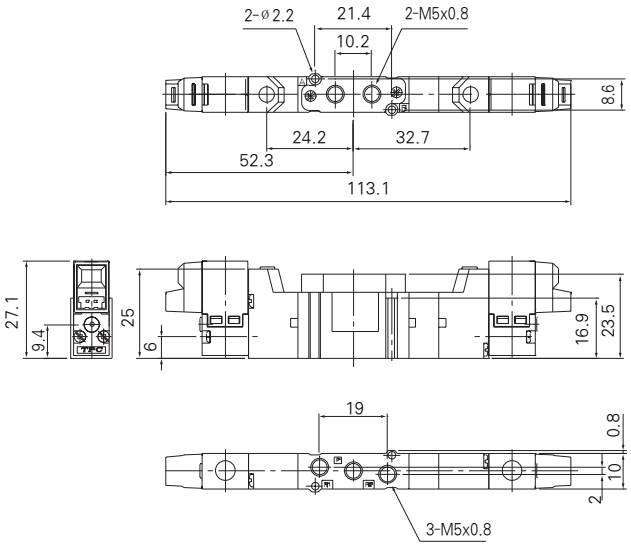

DV1340 3 Position / Base Mounted

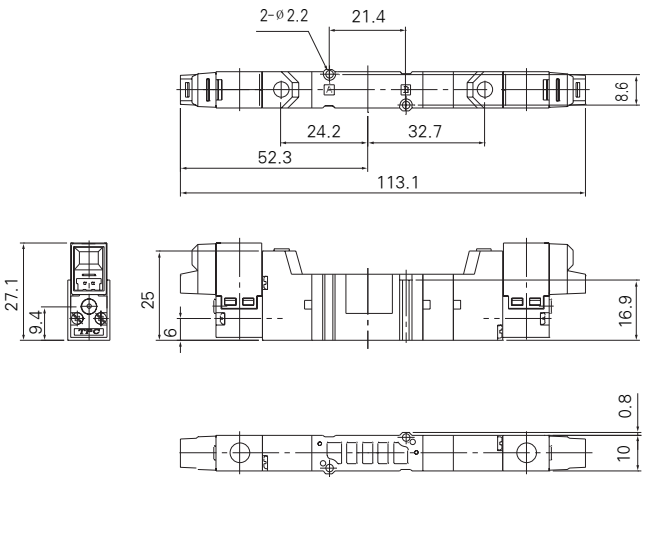

Series DV1000 / 3 Position / V: Vertical Connector Tupe

DV1320 3 Position / Body Ported

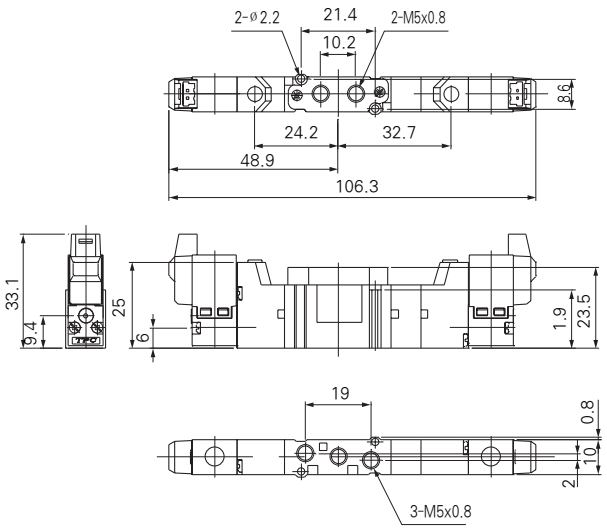

DV1340 3 Position / Base Mounted

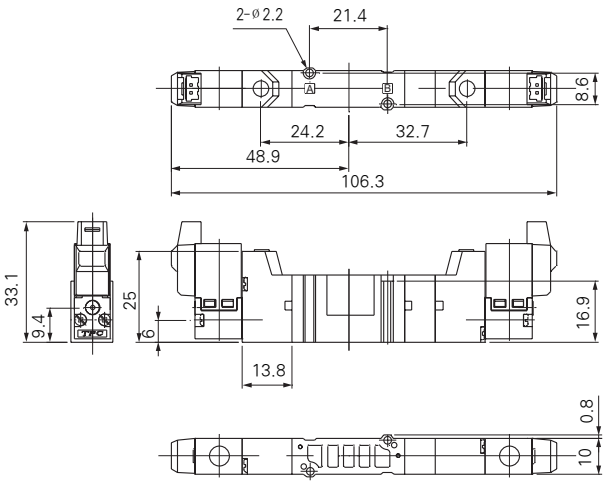

Dimensions / Series DV1000 (Body Ported) / H: Horizontal Connector Type

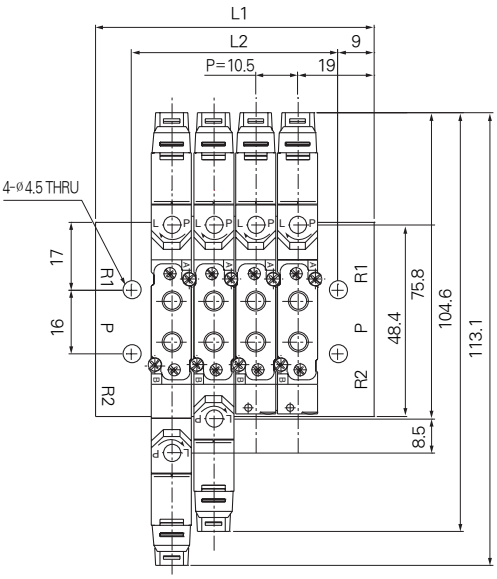

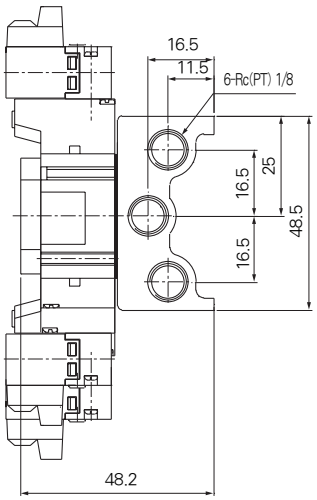

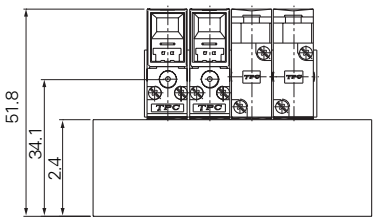

How to order

DVM1 — 20 — 05

1 2 3

1 DV1000 Series Manifold
2 Body Ported Type
3 Stations (2~20)

(mm)

Stations	2	3	4	5	6	7	8	9	10	11	12	13	14	15	16	17	18	19	20
L1	48.5	59	69.5	80	90.5	101	111.5	122	132.5	143	153.5	164	174.5	185	195.5	206	216.5	227	237.5
L2	30.5	41	51.5	62	72.5	83	93.5	104	114.5	125	135.5	146	156.5	167	177.5	188	198.5	209	219.5

Dimensions / Series DV1000 (Base Mounted) / H: Horizontal Connector Type

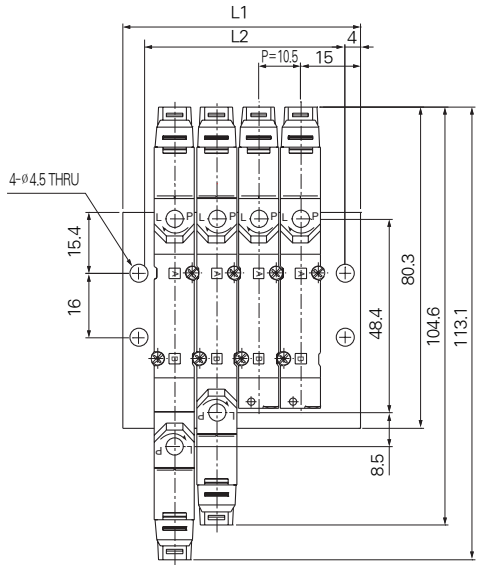

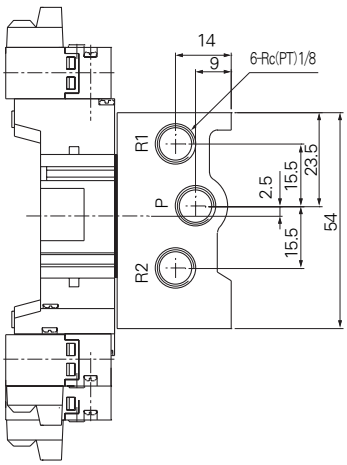

How To Order

DVM1 — 40 — 05

1 2 3

1 DV1000 Series Manifold
2 Base Mounted type
3 Stations (2~20)

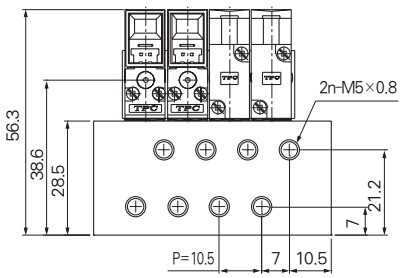

(mm)

Stations	2	3	4	5	6	7	8	9	10	11	12	13	14	15	16	17	18	19	20
L1	38.5	49	59.5	70	80.5	91	101.5	112	122.5	133	143.5	154	164.5	175	185.5	196	206.5	217	227.5
L2	30.5	41	51.5	62	72.5	83	93.5	104	114.5	125	135.5	146	156.5	167	177.5	188	198.5	209	219.5

Dimensions / Series DV1000 (Body Ported) / V: Vertical Connector Type

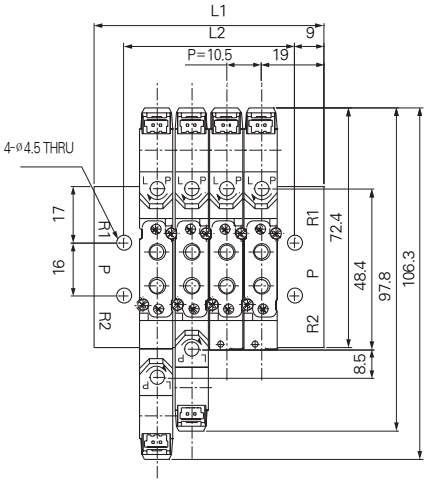

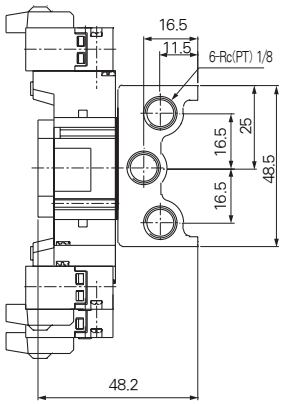

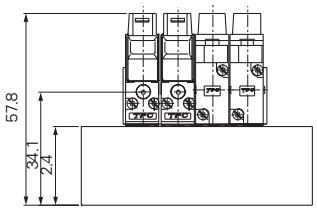

How To Order

DVM1 — 20 — 05

1 — 2 — 3

1 DV1000 Series Manifold
2 Body Ported Type
3 Stations (2~20)

(mm)

Stations	2	3	4	5	6	7	8	9	10	11	12	13	14	15	16	17	18	19	20
L1	48.5	59	69.5	80	90.5	101	111.5	122	132.5	143	153.5	164	174.5	185	195.5	206	216.5	227	237.5
L2	30.5	41	51.5	62	72.5	83	93.5	104	114.5	125	135.5	146	156.5	167	177.5	188	198.5	209	219.5

Dimensions / Series DV1000 (Base Mounted) / V: Vertical Connetor Type

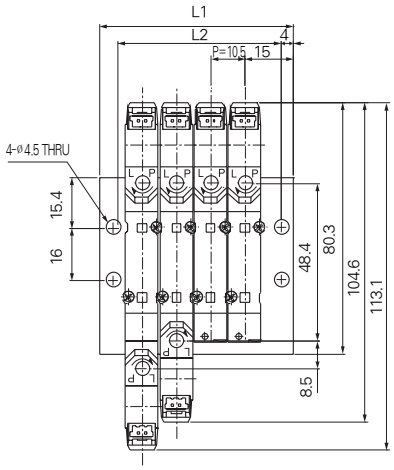

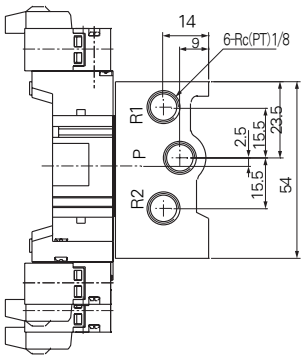

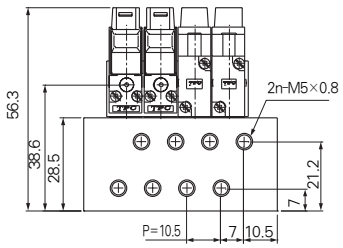

How To Order

DVM1 — 40 — 05

1 — 2 — 3

1 DV1000 Series Manifold
2 Base Mounted type
3 Stations (2~20)

(mm)

Stations	2	3	4	5	6	7	8	9	10	11	12	13	14	15	16	17	18	19	20
L1	38.5	49	59.5	70	80.5	91	101.5	112	122.5	133	143.5	154	164.5	175	185.5	196	206.5	217	227.5
L2	30.5	41	51.5	62	72.5	83	93.5	104	114.5	125	135.5	146	156.5	167	177.5	188	198.5	209	219.5

Dimensions / Series DV1000 Base Mounted / With Fitting

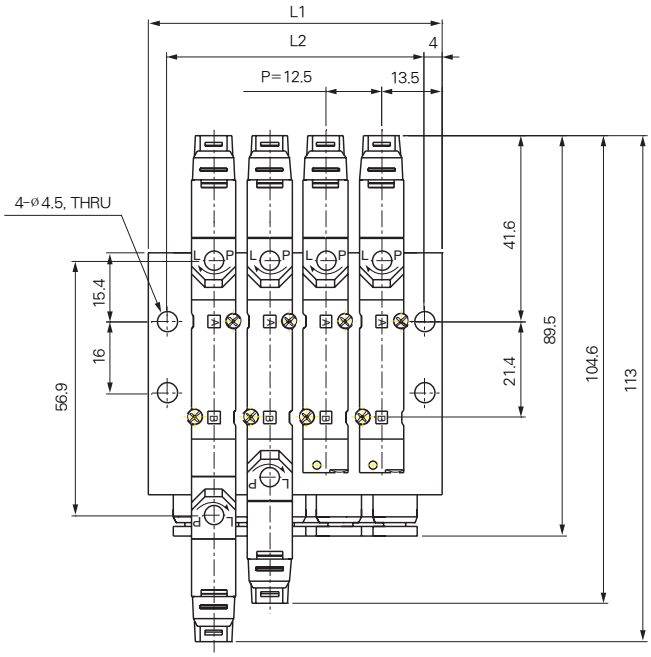

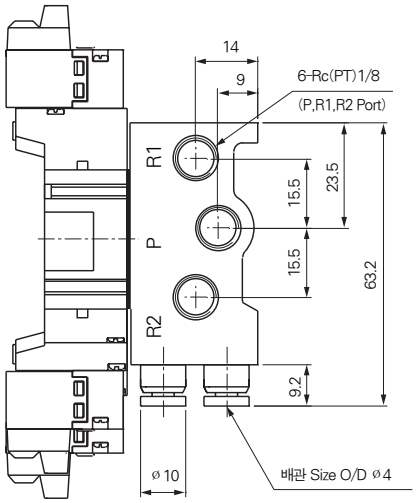

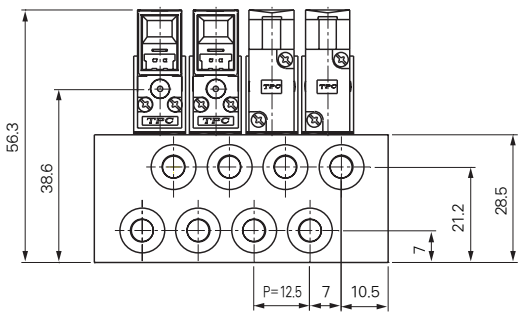

How To Order

DVM1 — 40 — 05 — T4

1 2 3 4

1. DV1000 Series Manifold
2. Base Mounted Type
3. Stations (2~20)
4. Cylinder Port Mounted Tube Size ø4

(mm)

Stations	2	3	4	5	6	7	8	9	10	11	12	13	14	15	16	17	18	19	20
L1	40.5	53	65.5	78	90.5	103	115.5	128	140.5	153	165.5	178	190.5	203	215.5	228	240.52	253	265.5
L2	32.5	45	57.5	70	82.5	95	107.5	120	132.5	145	157.5	170	182.5	195	207.5	220	232.5	245	257.5

Series DV3000 / 2 Position / H: Horizontal Connector Type

DV3120 Single / Body Ported

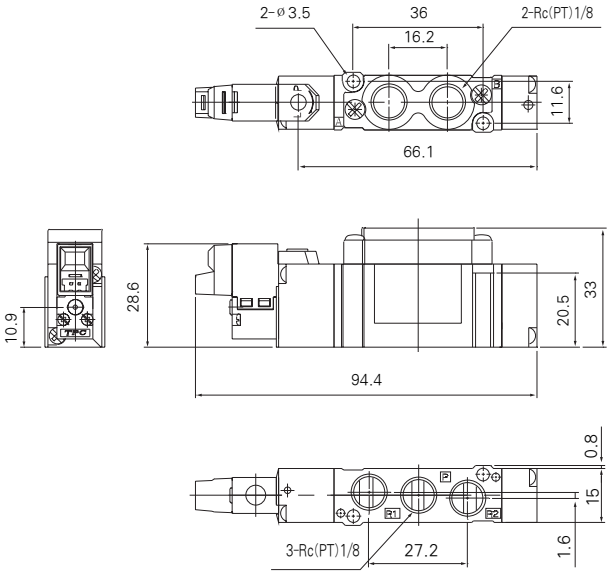

DV3140 Single / Base Mounted

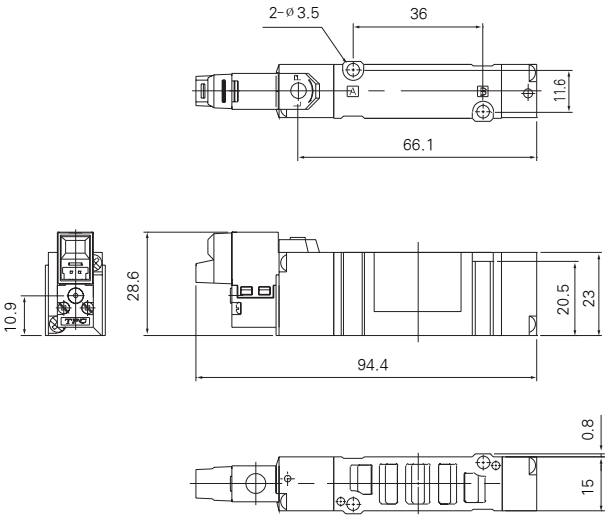

Series DV3000 / 2 Position / H: Horizontal Connector Type

DV3220 Double / Body Ported

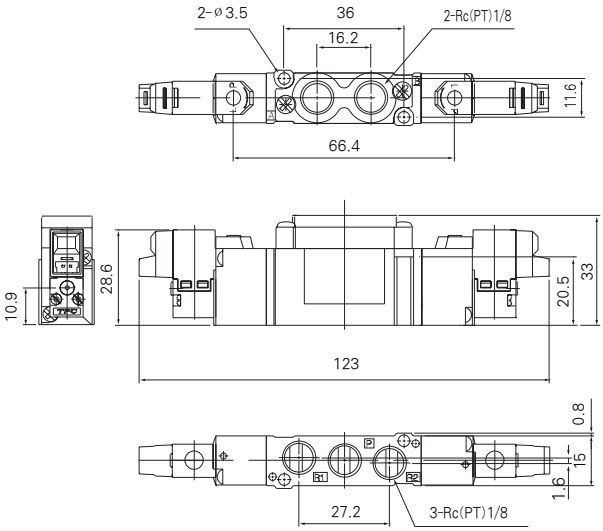

DV3240 Double / Base Mounted

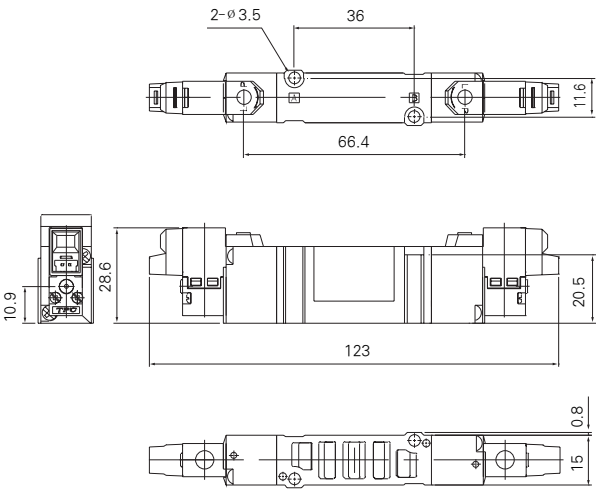

Series DV3000 / 2 Position / V: Vertical Connector Type

DV3120 Single / Body Ported

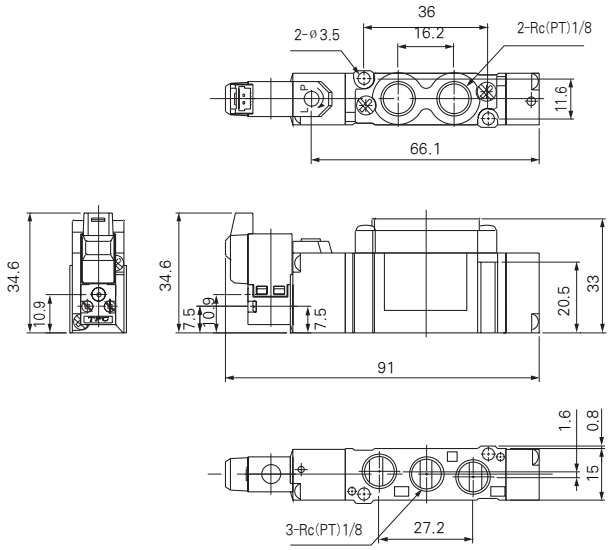

DV3140 Single / Base Mounted

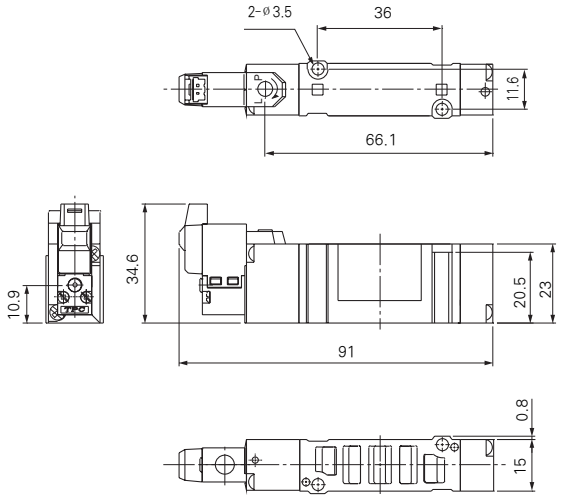

Series DV3000 / 2 Position / V: Vertical Connector Tupe

DV3220 Double / Body Ported

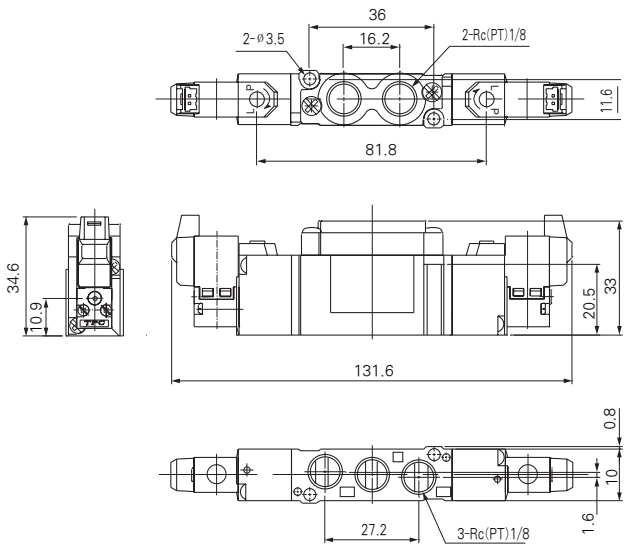

DV3240 Double / Base Mounted

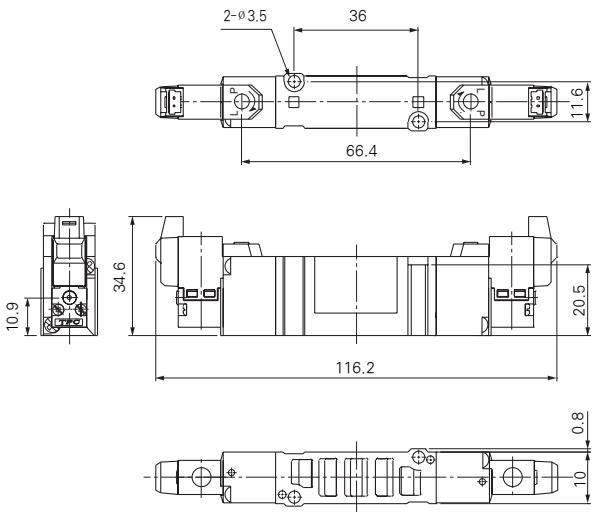

Series DV3000 / 3 Position / H: Horizontal Connector Type

DV3320 3 Position / Body Ported

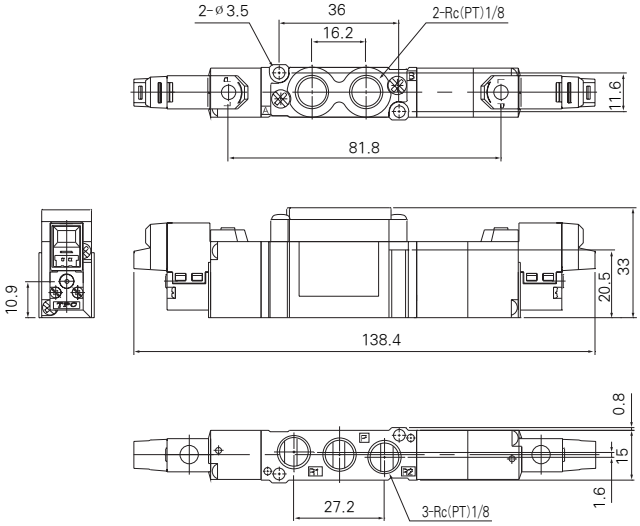

DV3340 3 Position / Base Mounted

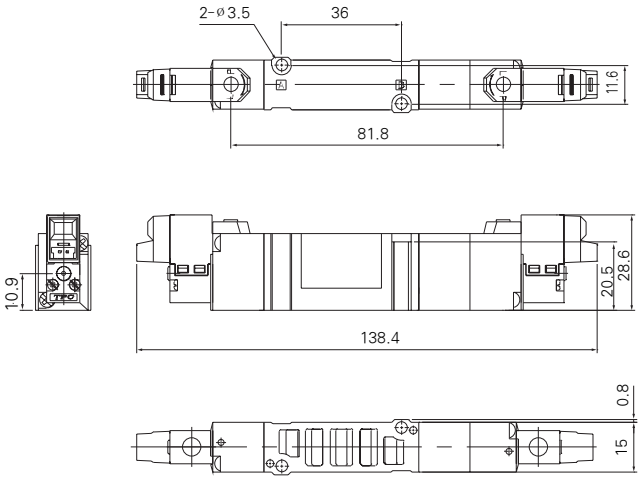

Series DV3000 / 3 Position / V: Vertical Connector Type

DV3320 3 Position / Body Ponted

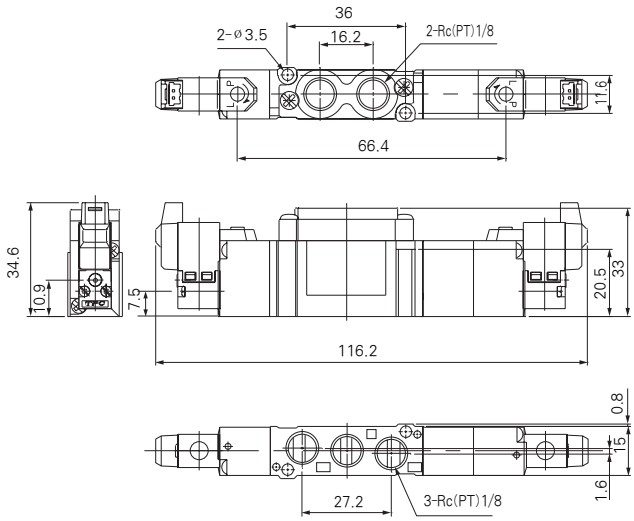

DV3340 Position / Base Mounted

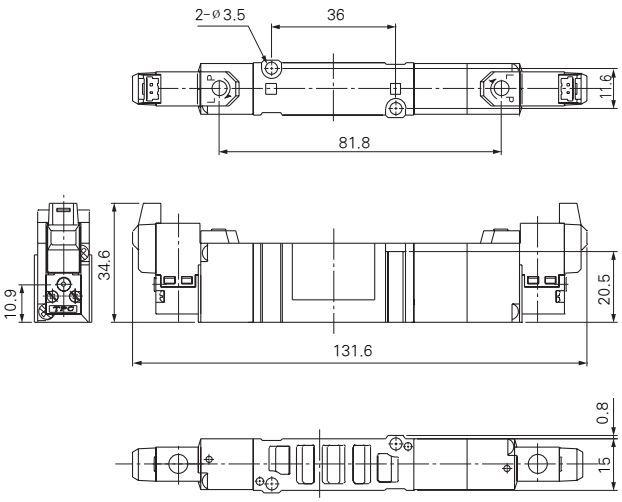

Dimensions / Series DV3000 Body Ported / H: Horizontal Connector Type

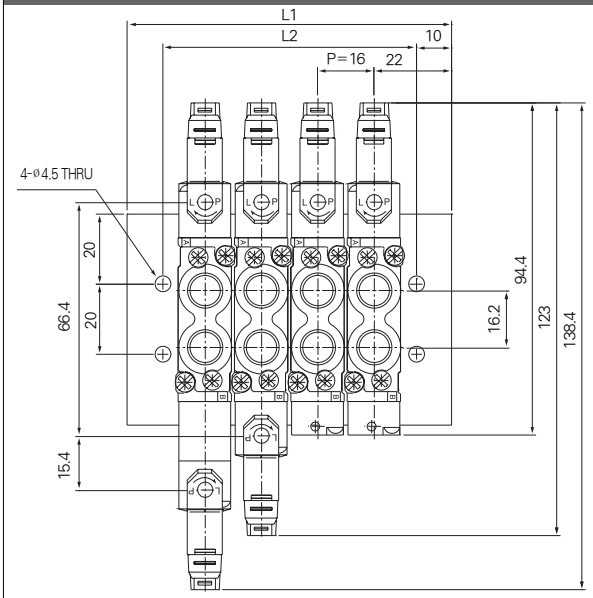

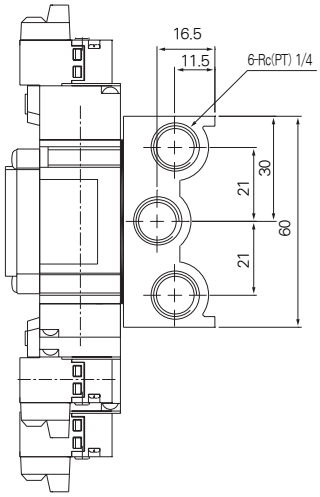

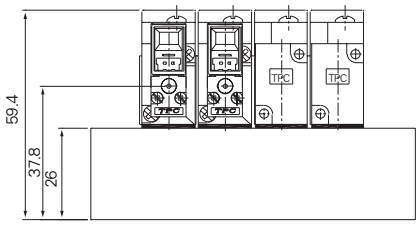

How To Order

DVM3 — 20 — 05

1 2 3

1 DV3000 Series Manifold
2 Body Ported Type
3 Stations (2~20)

(mm)

Stations	2	3	4	5	6	7	8	9	10	11	12	13	14	15	16	17	18	19	20
L1	60	76	92	108	124	140	156	172	188	204	220	236	252	268	284	300	316	332	348
L2	40	56	72	88	104	120	136	152	168	184	200	216	232	248	264	280	296	312	328

Dimensions / Series DV3000 Base Mounted / H: Horizontal Connector Type

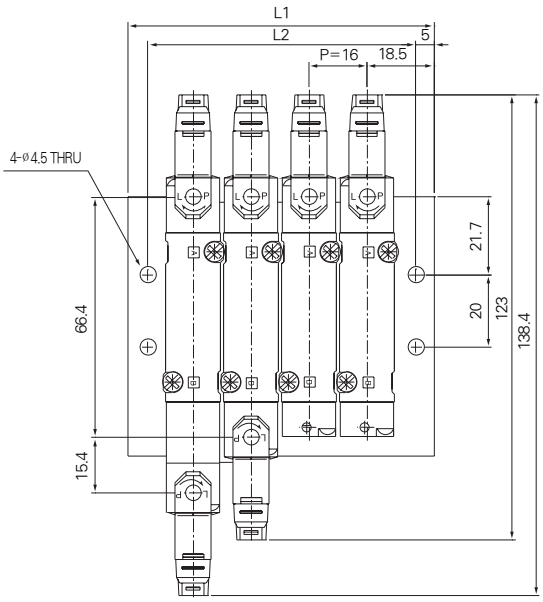

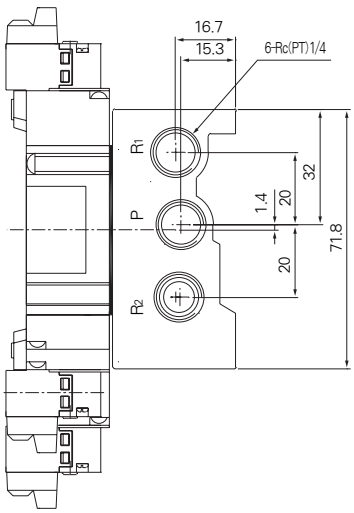

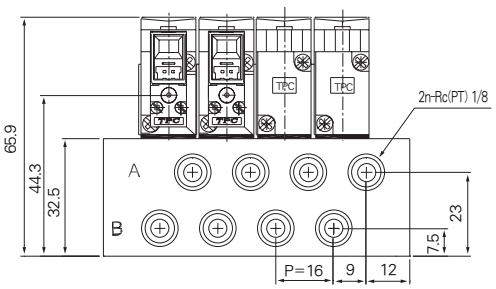

How To Order

DVM3 — 40 — 05

1 2 3

1 DV3000 Series Manifold
2 Base Mounted Type
3 Stations (2~20)

(mm)

Stations	2	3	4	5	6	7	8	9	10	11	12	13	14	15	16	17	18	19	20
L1	52.5	68.5	84.5	100.5	116.5	132.5	148.5	164.5	180.5	196.5	212.5	228.5	244.5	260.5	276.5	292.5	308.5	324.5	340.5
L2	42	58	74	90	106	122	138	154	170	188	202	218	234	250	266	282	298	314	330

Dimensions / Series DV3000 Body Ported / V: Vertical Connector Type

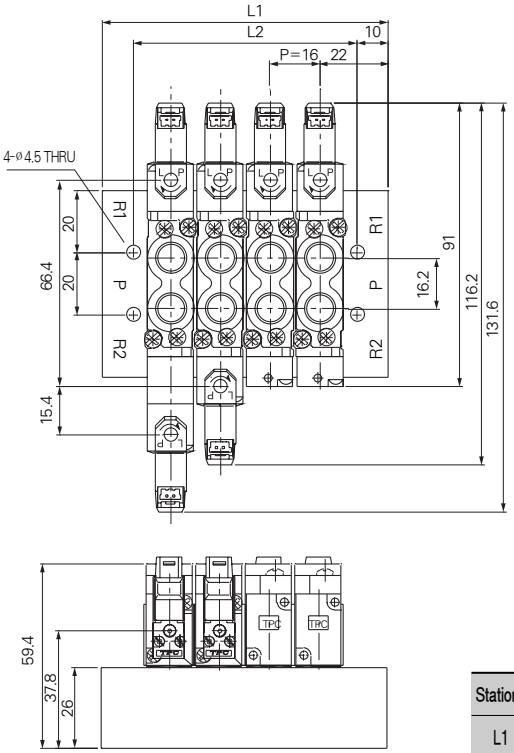

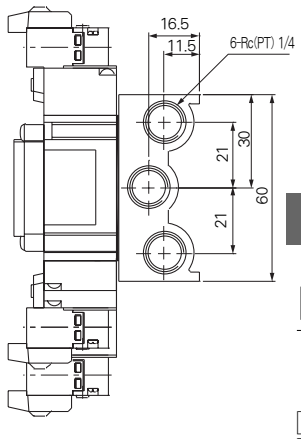

How To Order

DVM3 — 20 — 05

1 2 3

1 DV3000 Series Manifold
2 Body Ported Type
3 Stations (2~20)

(mm)

Stations	2	3	4	5	6	7	8	9	10	11	12	13	14	15	16	17	18	19	20
L1	60	76	92	108	124	140	156	172	188	204	220	236	252	268	284	300	316	332	348
L2	40	56	72	88	104	120	136	152	168	184	200	216	232	248	264	280	296	312	328

Dimensions / Series DV3000 Base Mounted / V: Vertical Connector Type

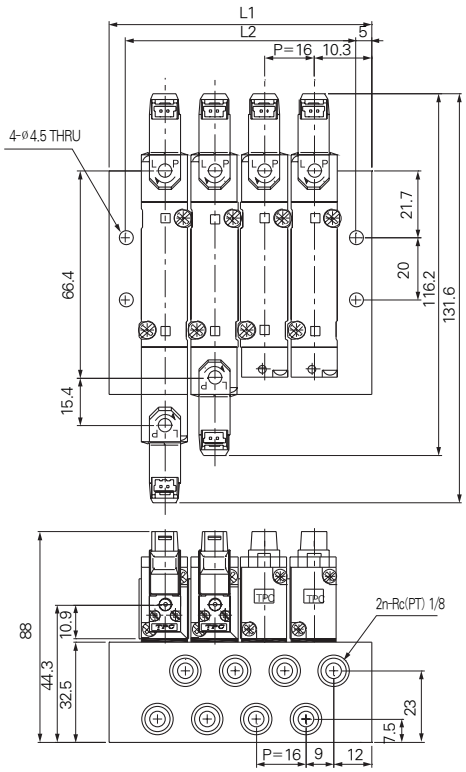

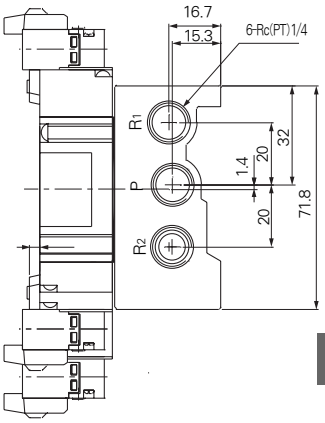

How To Order

DVM3 — 40 — 05

1 2 3

1 DV3000 Series Manifold
2 Base Mounted Type
3 Stations (2~20)

(mm)

Stations	2	3	4	5	6	7	8	9	10	11	12	13	14	15	16	17	18	19	20
L1	52.5	68.5	84.5	100.5	116.5	132.5	148.5	164.5	180.5	196.5	212.5	228.5	244.5	260.5	276.5	292.5	308.5	324.5	340.5
L2	42	58	74	90	106	122	138	154	170	188	202	218	234	250	266	282	298	314	330

Dimensions / Series DV3000 Base Mounted / With Fitting

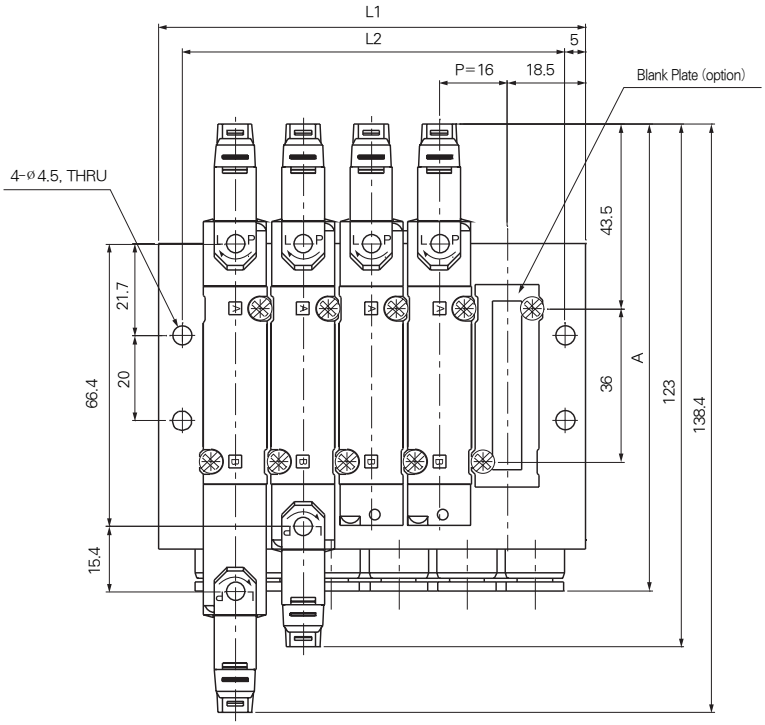

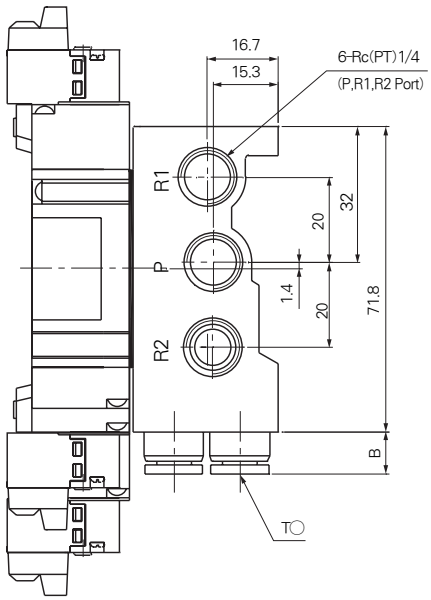

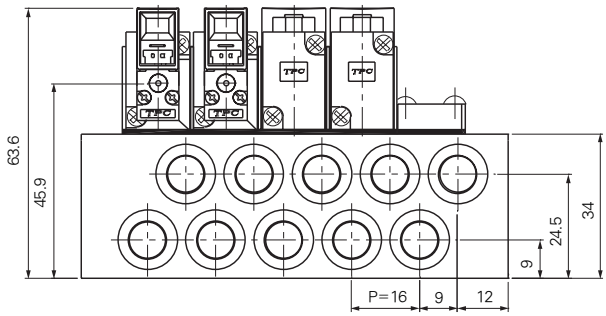

How To Order

DVM3 — 40 — 05 — T○

1 2 3 4

1 DV3000 Series Manifold
2 Base Mounted Type
3 Stations (2~20)
4 T6 : Mounted Tube Size ø6
T8 : Mounted Tube Size ø8

	T6	T8
A	105.6	110.0
B	7.0	10.0

(mm)

Stations	2	3	4	5	6	7	8	9	10	11	12	13	14	15	16	17	18	19	20
L1	52.5	68.5	84.5	100.5	116.5	132.5	148.5	164.5	180.5	196.5	212.5	228.5	244.5	260.5	276.5	292.5	308.5	324.5	340.5
L2	42	58	74	90	106	122	138	154	170	186	202	218	234	250	266	282	298	314	330

Series DV4000 / 2 Position / H: Horizontal Connector Type

DV4120 Single / Body Ported

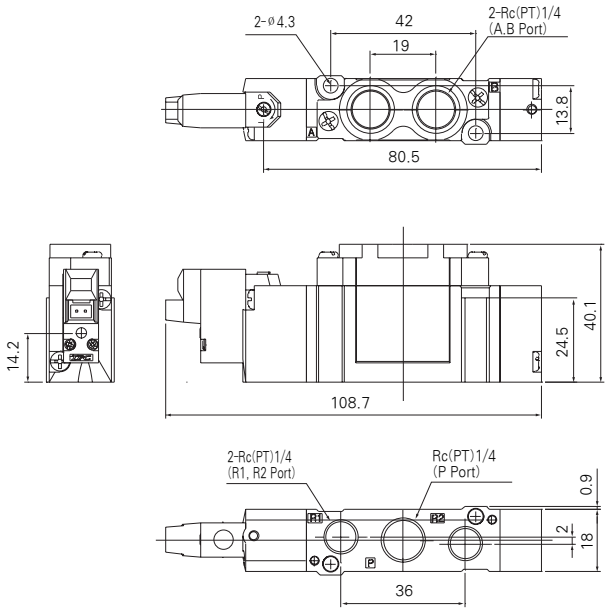

DV4140 Single / Base Mounted

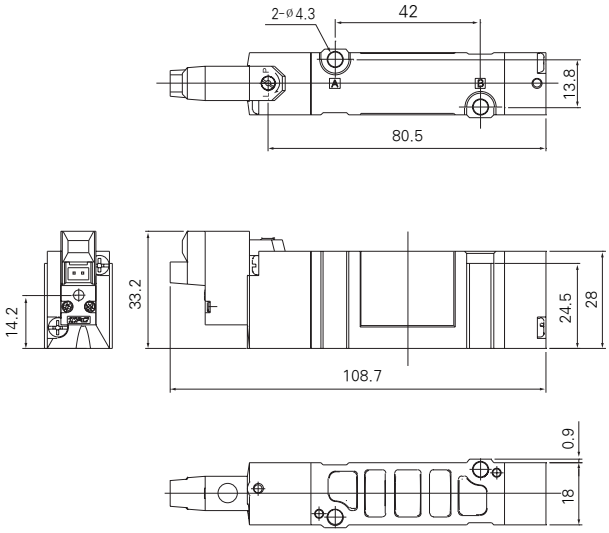

Series DV4000 / 2 Position / H: Horizontal Connector Type

DV4220 Double / Body Ported

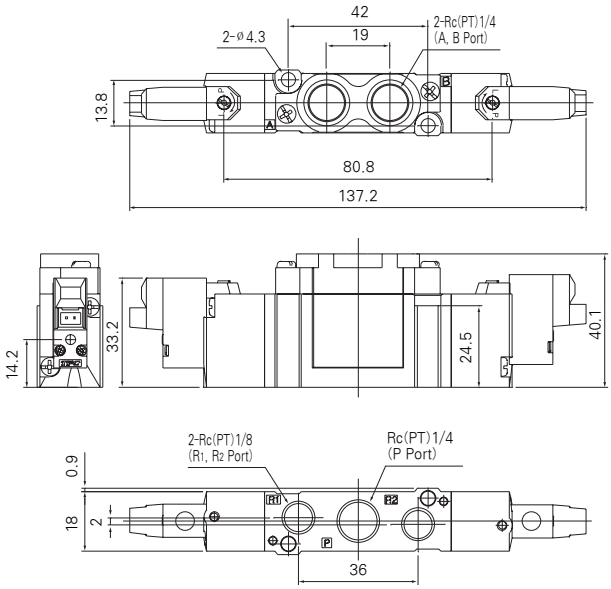

DV4240 Double / Base Mounted

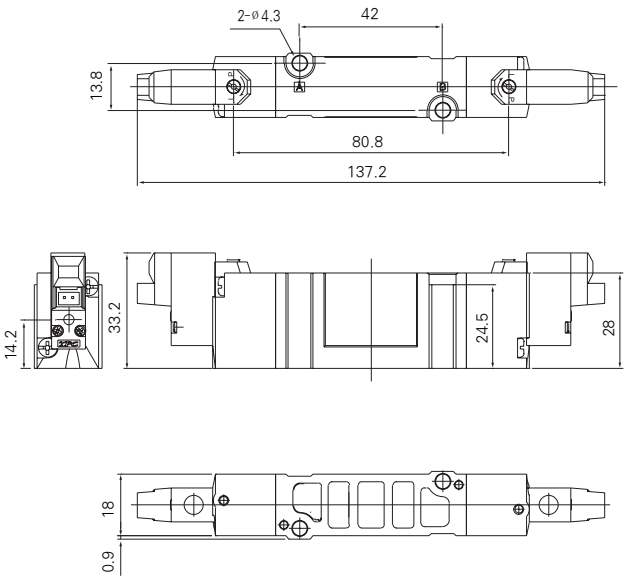

Series DV4000 / 2 Position / V: Vertical Connector Type

DV4120 Single / Body Ported

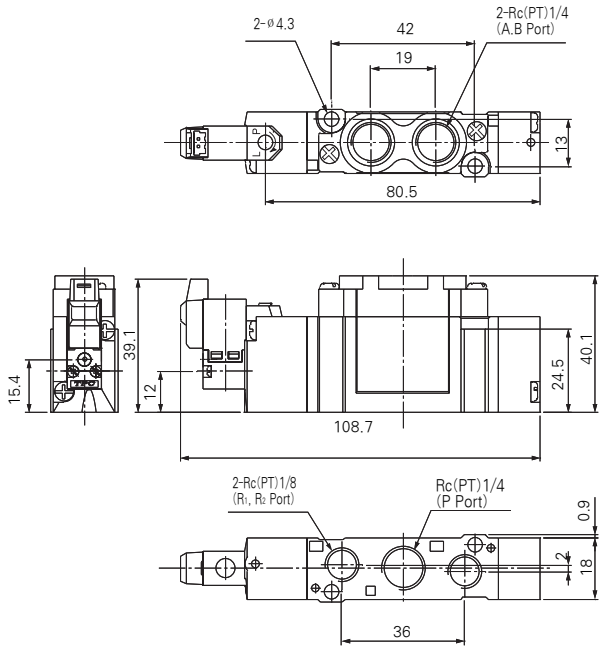

DV4140 Single / Base Mounted

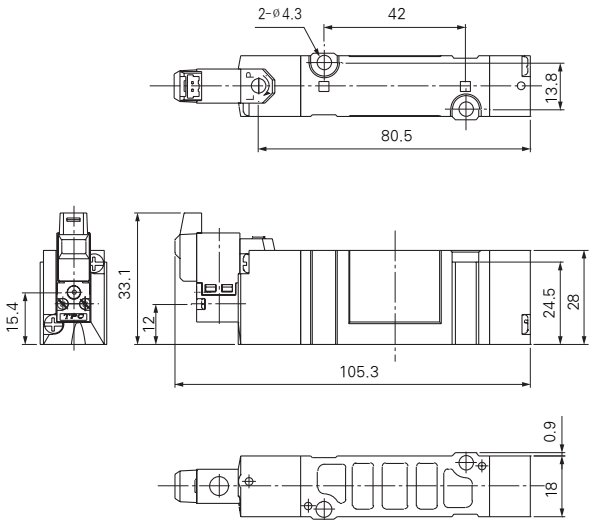

Series DV4000 / 2 Position / V: Vertical Connector Type

DV4220 Double / Body Ported

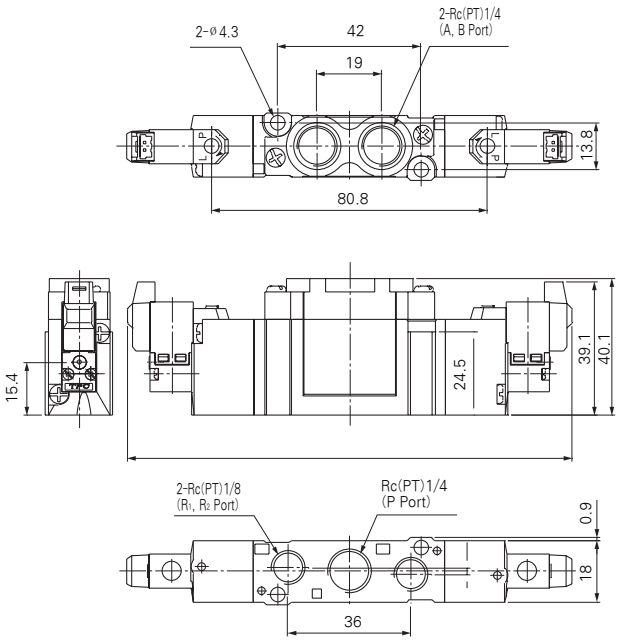

DV4240 Double / Base Mounted

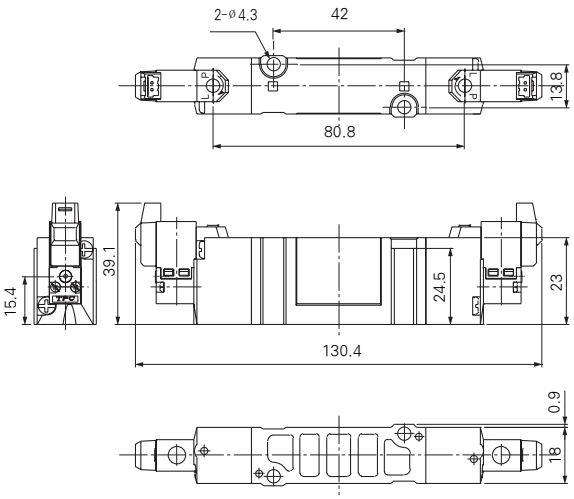

Series DV4000 / 3 Position / H: Horizontal Connector Type

DV4320 3 Position / Body Ported

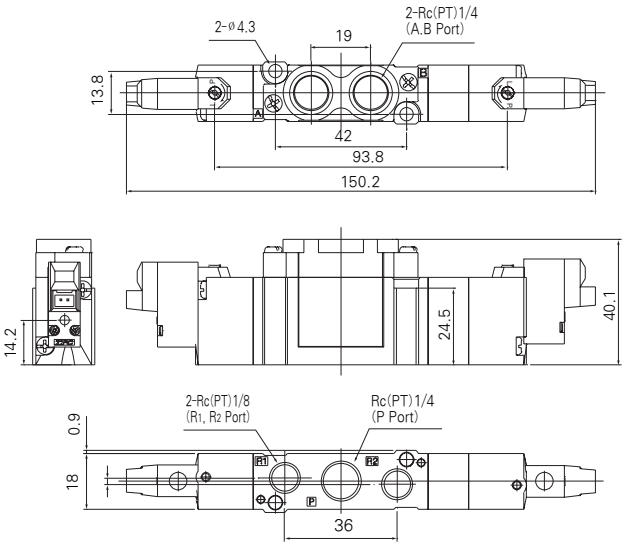

DV4340 3 Position / Base Mounted

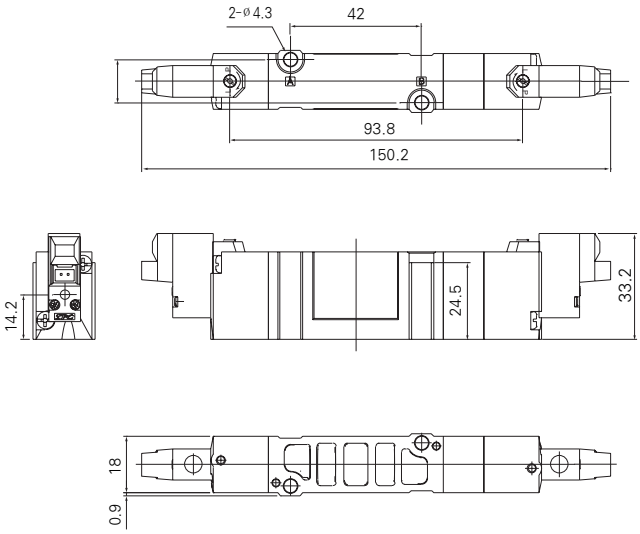

DV4340 3 Position / Base Mounted / V: Vertical Connector Type

DV4320 3 Position / Body Ported

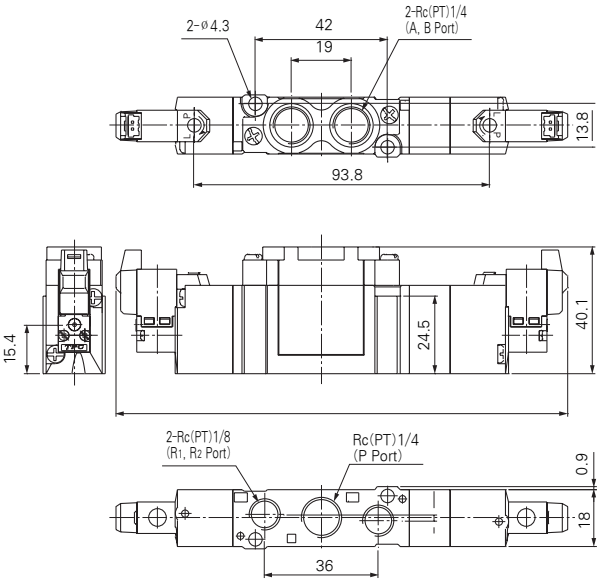

DV4340 3 Position / Base Mounted

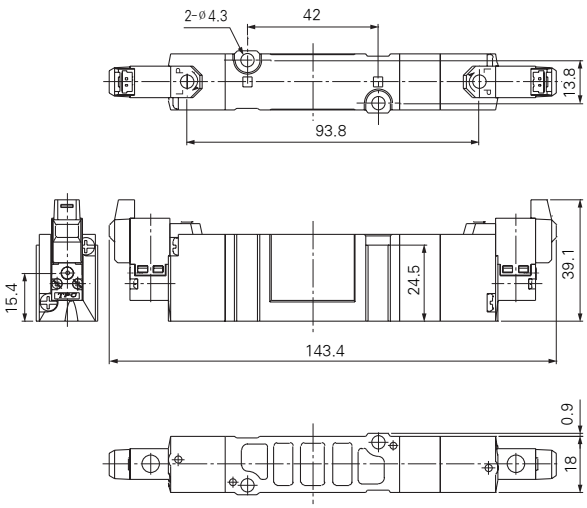

Dimensions / Series DV4000 Body Ported / H: Horizontal Connector Type

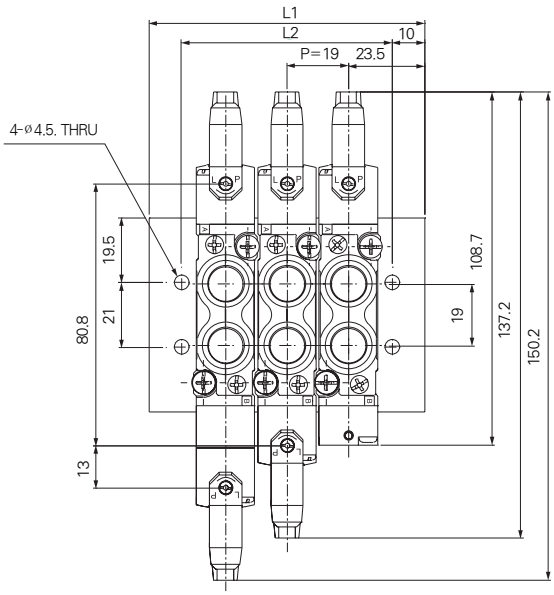

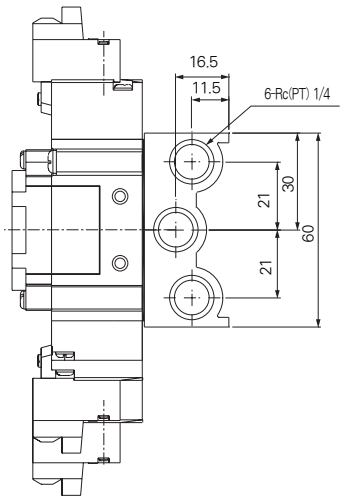

How To Order

DVM4 — 20 — 05

1 — 2 — 3

1 DV4000 Series Manifold
2 Body Ported Type
3 Stations (2~20)

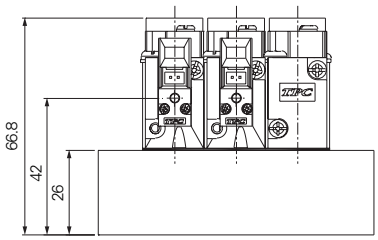

Stations	2	3	4	5	6	7	8	9	10	11	12	13	14	15	16	17	18	19	20
L1	66	85	104	123	142	161	180	199	218	237	256	275	294	313	332	351	370	389	408
L2	46	65	84	103	122	141	160	179	198	217	236	255	274	293	312	331	350	369	388

Dimensions / Series DV4000 Base Mounted / H: Horizontal Connector Type

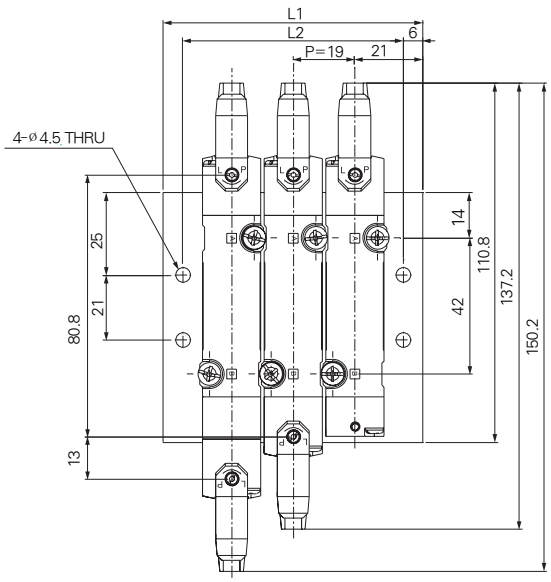

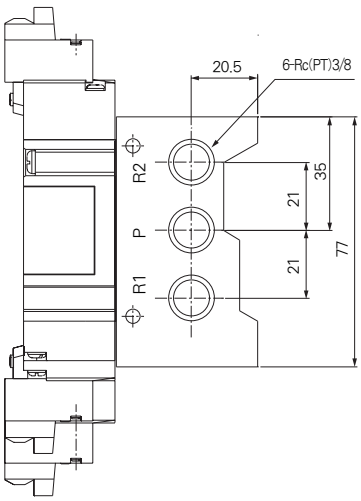

How To Order

DVM4 — 40 — 05

1 — 2 — 3

1 DV4000 Series Manifold
2 Base Mounted Type
3 Stations (2~20)

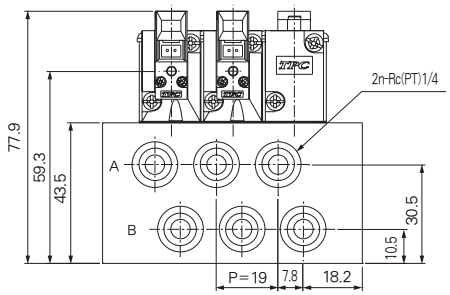

Stations	2	3	4	5	6	7	8	9	10	11	12	13	14	15	16	17	18	19	20
L1	61	80	99	118	137	156	175	194	213	232	251	270	289	308	327	346	365	384	403
L2	49	68	87	106	125	144	163	182	201	220	239	258	277	296	315	334	353	372	391

Dimensions / Series DV4000 Body Ported / V: Vertical Connetor Type

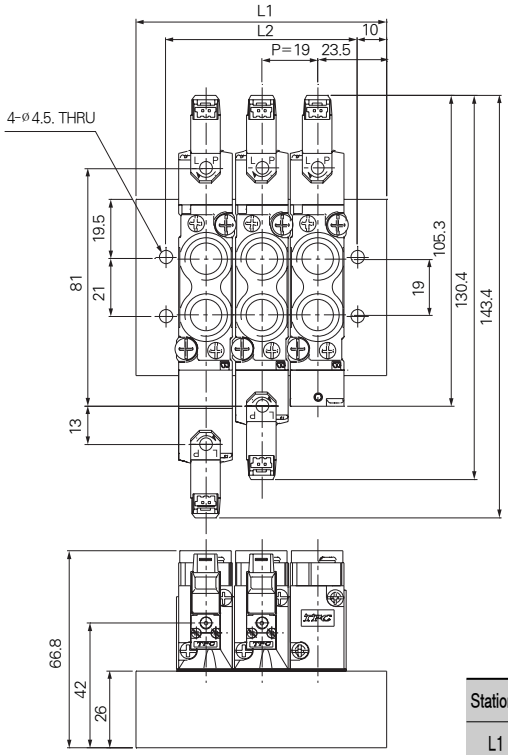

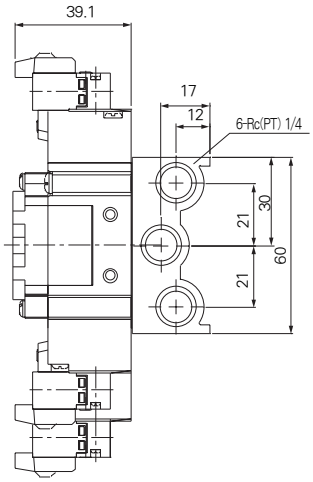

How To Order

DVM4 — 20 — 05

1 — 2 — 3

1 DV4000 Series Manifold
2 Body Ported Type
3 Stations (2~20)

Stations	2	3	4	5	6	7	8	9	10	11	12	13	14	15	16	17	18	19	20
L1	66	85	104	123	142	161	180	199	218	237	256	275	294	313	332	351	370	389	408
L2	46	65	84	103	122	141	160	179	198	217	236	255	274	293	312	331	350	369	388

Dimensions / Series DV4000 Base Mounted / V: Vertical Connector Type

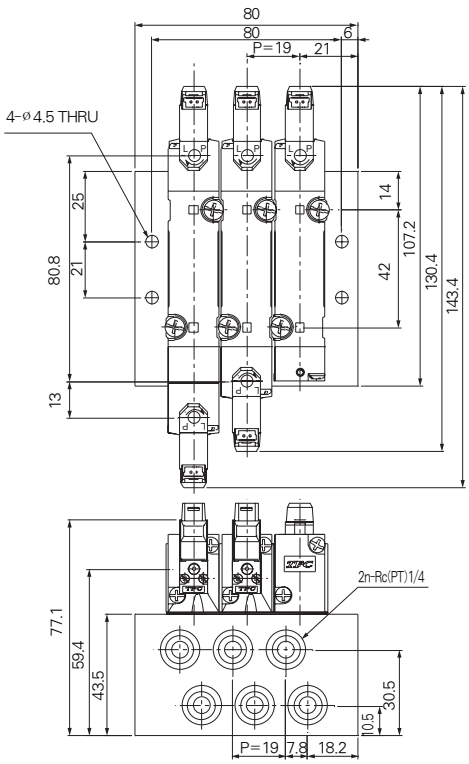

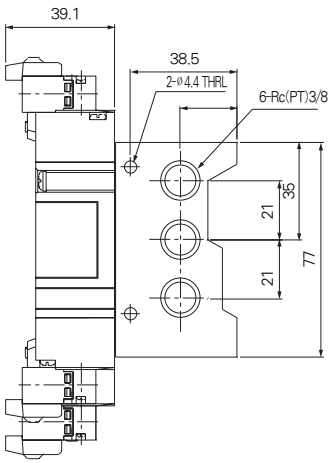

How To Order

DVM4 — 40 — 05

1 — 2 — 3

1 DV4000 Series Manifold
2 Base Mounted Type
3 Stations (2~20)

Stations	2	3	4	5	6	7	8	9	10	11	12	13	14	15	16	17	18	19	20
L1	61	80	99	118	137	156	175	194	213	232	251	270	289	308	327	346	365	384	403
L2	49	68	87	106	125	144	163	182	201	220	239	258	277	296	315	334	353	372	391

Caution

1. Manual operation

1-1. The push-turn Lock method driver operation

While pushing the manual button turn to the arrow direction. If you do not turn and push you can use the Non-lock Push method to operate. When using a driver you can use a watch driver to easily turn. When removing the Lock you can turn to the opposite direction of the arrow. If you press too hard you will damage the valve.

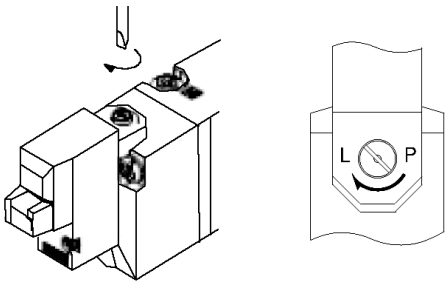

Caution) When activating automatically have the manual button on the Lock stage and make sure to activate after removing the Lock.

1-2. Non-lock Push method manual operation

Using the Solenoid coil side manual operation press lightly on the manual button under the coil connecter with a driver as seen below.

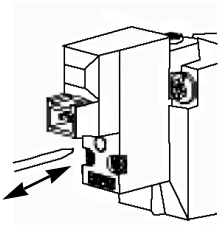

2. Valves of AC 100V, AC 220V Specification

Our valve is a non-standard option specification Solenoid Coil which you may ask about when ordering.

3. Collection exhaustion

The DV series is a type that the pilot valve exhaustion is collected to the main valve. Be careful that the exhaustion port is clear of abstructions. The P, R port is on both sides of the manifold and you can select the exhaust direction according to the installation location. The P port exhaustion must have the apporopriate size for the exhaust connection hole in order to prevent an output deficiency of the actuator and operational errors due to a shortage in pressure. Make sure to use plenty of exhaustion port on both sides to ensure no operational errors occur due to exhaustion resistance when you are installing the R port noise device.

4. Using the 3 port valve

The DV series has a specification of a 5 port valve but if you are using a 3 port valve use one direction of a cylinder port (A,B) to stop up the plug and you will be able to use the Normal Close (N.C) or Normal Open (N.O) 3 port valve.

Except, use with the exhaust port (R1, R2) open.

Location of the plug		B port	A port
Conversion Method		N.C	N.O
Number of Solenoids	Single		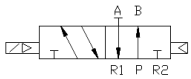
	Double	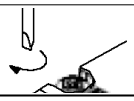	

5. How to use the plug connector

When you are installing the connector hold the lever and connector body with your hands and insert the connector in the connector housing, then lock it by pressing in the connector lever hook. When you are separating the connector press the lever to disconnect the hook from the connector housing home. When you are pulling the lead line too lightly or put too much force it will result in poor connections or disconnections.

Series DS300

Rubber Seal 3 Port Pilot Solenoid Type

- COMPACT SIZE AND LIGHT WEIGHT
- LARGE FLOW CAPACITY
- LOW POWER CONSUMPTION
- DESIGNED FOR NON-LUBRICATED SERVICE

Symbol

Single Solenoid

DS30○-○○○-○○A(N.C)

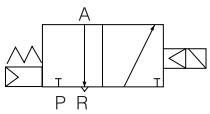

DS30○-○○○-○○B(N.O)

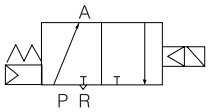

How to Order

DS3 0 1 — 1 G C — 02 A — ○

(1) (2) (3) (4) (5) (6) (7) (8) (9)

1 Series DS300

2 Type of Actuation
0 : Normal Closed/Normal Open

3 Body Option
1 : Body Ported Type

4 Voltage
1 : AC100V, 50/60Hz
2 : AC200V, 50/60Hz
3 : AC120V, 50/60Hz
4 : AC240V, 50/60Hz
5 : DC24V
6 : DC12V
7 : DC6V
8 : AC24V, 50/60Hz
9 : Other

5 Electrical Entry/Indicator Light and Surge Suppressor
G : Grommet [Lead wire length 300 mm]
DZ : With Indicator light and Surge Suppressor

6 Manual Override
Blank : Non-lock push type
C : Knob locking type

7 Port Size (P, A, R Port)
01 : PT 1/8
02 : PT 1/4(Standard)

8 Type of Actuation
A : Normal Close
B : Normal Open

9 Special Option
Blank : Standard type
XC16 : Copper-free

Pilot Valve Assembly

SC2 — 1 G ○ — 50 — ○

(1) (2) (3) (4) (5)

1 For DS300 series Valve Ass' y

2 Voltage
1 : AC100V, 50/60Hz
2 : AC200V, 50/60Hz
3 : AC120V, 50/60Hz
4 : AC240V, 50/50Hz
5 : DC24V
6 : DC12V
7 : DC6V
8 : AC24V, 50/60Hz

3 Electrical Entry/Indicator Light and Surge Suppressor
G : Grommet (Lead wire length 300mm)
DZ : DIN Connector With Indicator light and Surge suppressor

4 Manual override
Blank : Non-locking Push type
C : Knob locking type

5 Special Option
Blank : Standard type
XC16 : Copper-free

Specifications

Model	DS300	
Action	Pilot Type	
Position, Port	2 Position 3 Port	
Body Options	Body Ported Type	
Fluid	Air	
Port Size Rc(PT)	1/8	1/4
Effective Orifice ㎟(Cv)	19.2 (1.07)	22 (1.2)
Operating Pressure Range	1.5 ~9 kgf/㎠ {0.15~0.9 MPa}	
Ambient and Fluid Temperature	MAX. 50℃	
Response Time	30ms or less(At 0.5 MPa)	
MAX. Operating Frequency	5 Hz	
Lubrication	Not required	
Manual Override	Non-Lock Push Type, Knob Locking Type	
Mounting Position	Free	
Impact/Vibration Resistance	30 G/5 G (8.3~2000 Hz)	

Electrical Entry			Grommet(G)	DIN Connector(DZ)
Coil Voltage	AC(50/60Hz)		100VAC, 200VAC, 120VAC, 240VAC	
	DC		6VDC, 12VDC, 24VDC	
Allowable Voltage			-15~+10% of Rated Voltage	
Power Consumption	AC	Inrush	5.6 VA(50Hz), 5VA(60Hz)	
		Holding	3.4 VA(50Hz), 2.3VA(60Hz)	
	DC		1.8W/2.0W (With LED)	
Indicator light and Surge Voltage suppressor Circuit	AC		LED, Varistor	
	DC		LED, Varistor	

Construction/Parts List

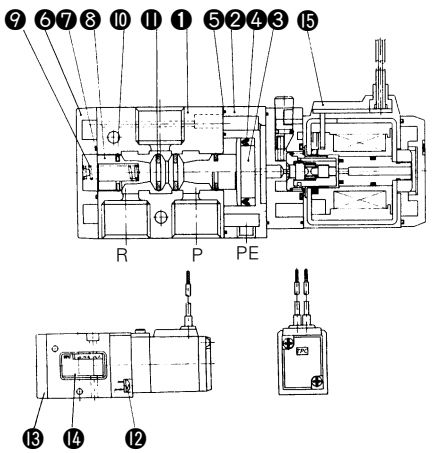

No.	Description	Material	Notes
❶	Body	Aluminum Diecasting	Metallic Paint
❷	Adapter Plate	Resin	
❸	Piston Plate	Resin	
❹	Piston Packing	NBR	
❺	Adapter Plate Gasket	NBR	
❻	End Cover	Zinc Diecasting	Black Paint
❼	End Cover Gasket	NBR	
❽	Spool	Aluminum NBR	
❾	Spool Spring	Spring Steel	
❿	Spool Packing	NBR	
⓫	Quad Ring	NBR	
⓬	+Pan Headed Screw	Carbon Steel	M4×0.7×12 ℓ
⓭	+Flush Headed Screw	Carbon Steel	M3×0.5×8 ℓ
⓮	Name Plate		
⓯	Pilot Valve Ass'y	-	

Body Ported/2 Position

(mm)

Grommet DS30○-○G

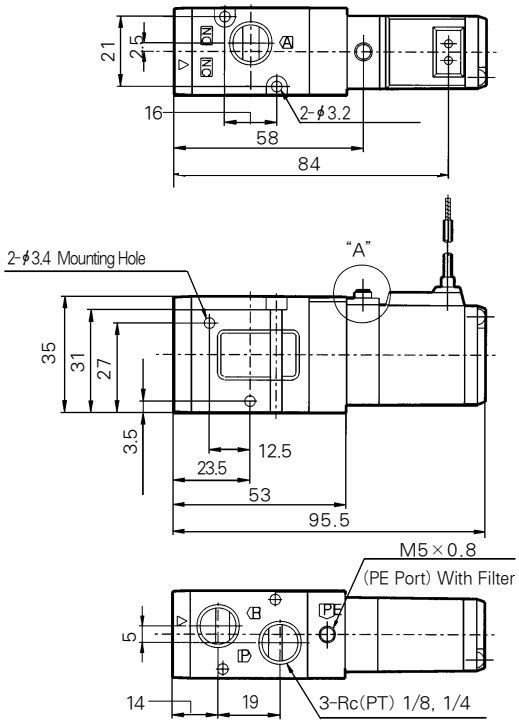

"A" Knob Locking Type
(SC2-○GC-50)

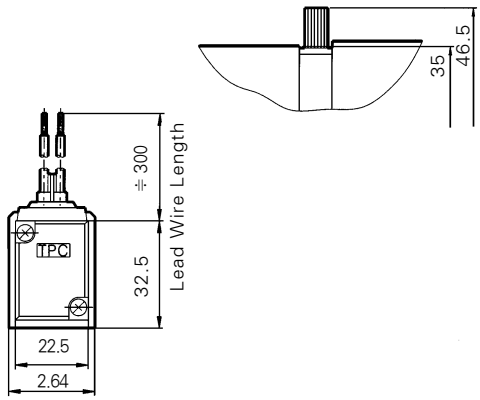

DIN Connector DS30○-○DZ

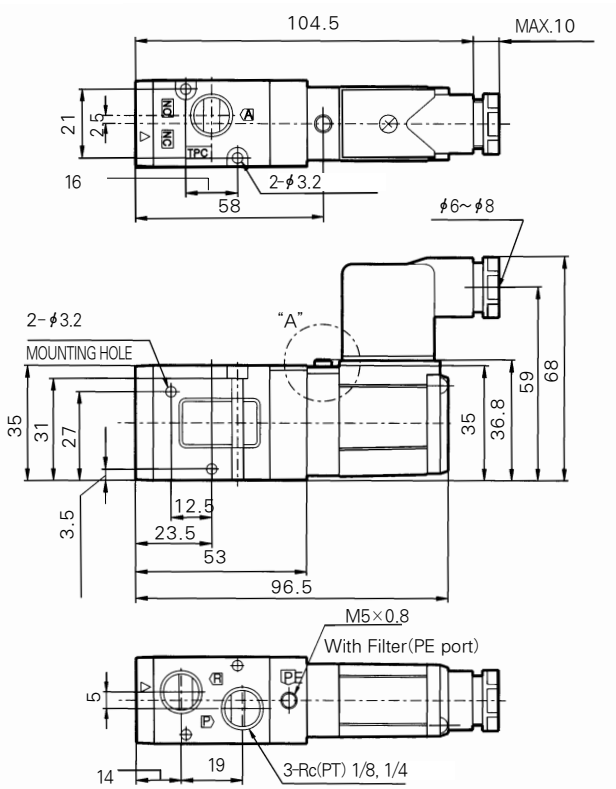

"A" Knob Locking Type
(SC2-○DZC-50)

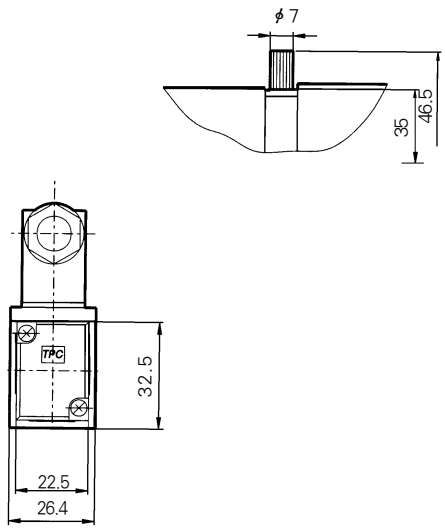

Series DS3000

Rubber Seal 5 Port Pilot Solenoid Type

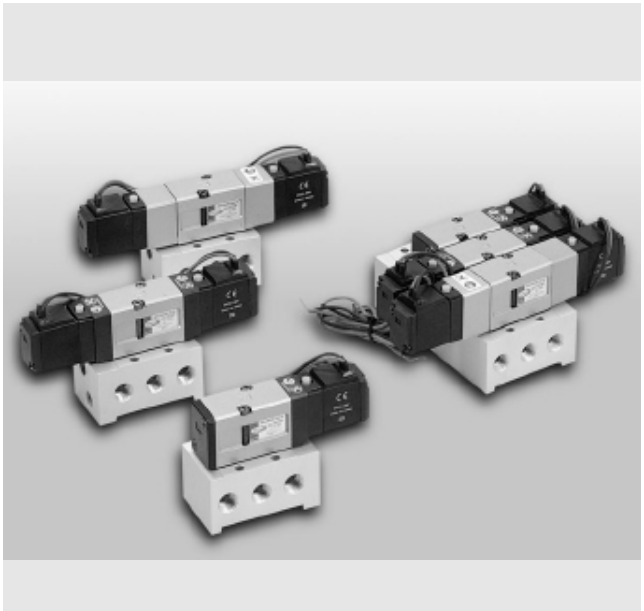

- COMPACT SIZE AND LIGHT WEIGHT
- LARGE FLOW CAPACITY
- LOW POWER CONSUMPTION
- DESIGNED FOR NON-LUBRICATED SERVICE

Symbol

Single
DS3130

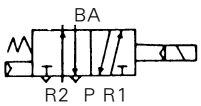

Double
DS3230

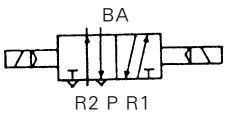

Closed Center
DS3330

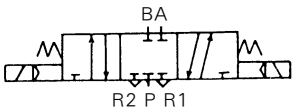

Exhaust Center
DS3430

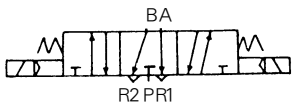

How to Order

DS3 1 3 0 — 1 G C — 02 — ○

(1) (2) (3) (4) (5) (6) (7) (8) (9)

1 Series DS3000

2 Type of Actuation
- 1 : 2 Position/Single Solenoid
- 2 : 2 Position/Double Solenoid
- 3 : 3 Position/Closed Center
- 4 : 3 Position/Exhaust Center

3 Body Type
- 3 : for 30 type Manifold, Body Ported

4 Body option
- 0 : Standard
- 3 : Common Exhaust for Main and Pilot Valve

5 Voltage
- 1 : AC100V, 50/60Hz
- 2 : AC200V, 50/60Hz
- 3 : AC120V, 50/60Hz
- 4 : AC240V, 50/60Hz
- 5 : DC24V
- 6 : DC12V
- 7 : DC6V
- 8 : AC24V, 50/60Hz
- 9 : Other

6 Electrical Entry/Indicator Light and Surge Suppressor
- G : Grommet(Lead wire length 300mm)
- DZ : DIN Connector With Indicator light and Surge suppressor

7 Manual Override
- Blank : Non-locking Push type
- C : Knob locking type

8 Port Size(SUP., CYL.)
- 01 : Rc(PT) 1/8
- 02 : Rc(PT) 1/4 (Exhaust Port:1/8)

9 Special Option
- Blank : Standard type
- XC16 : Copper-free

Pilot Valve Assembly

SC2 — 1 G ○ — 50 — ○

(1) (2) (3) (4) (5)

1 For DS 3000 series Valve Ass'y

2 Voltage
- 1 : AC100V, 50/60Hz
- 2 : AC200V, 50/60Hz
- 3 : AC120V, 50/60Hz
- 4 : AC240V, 50/60Hz
- 5 : DC24V
- 6 : DC12V
- 7 : DC6V
- 8 : AC24V, 50/60Hz
- 9 : Other

3 Electrical Entry/Indicator Light and Surge Suppressor
- G : Grommet(Lead wire length 300mm)
- DZ : DIN connector With Indicator light and Surge suppressor

4 Manual override
- Blank : Non-Lock Push type
- C : Knob locking type

5 Special Option
- Blank : Standard Type
- XC16 : Copper-Free

Specifications

Fluid		Air
Operating Pressure Range	2 Position Single · 3 Position	1.5~9 kgf/㎠ {0.15~0.9MPa}
	2 Position Double	1~9 kgf/㎠ {0.1~0.9MPa}
Ambient and Fluid Temperature		50℃
Response Time	3 Position Single/Double	30 ms or less {0.5 MPa}
	2 Position	40 ms or less {0.5 MPa}
Max. Operating Frequency	2 Position Single/Double	5 Hz
	3 Position	3Hz
Lubrication		Not Required※
Manual Override		Non-lock Push Type, Knob Lock type
Mounting Position		Free
Impact/Vibration Resistance		30 G/5 G(8.3~2000 Hz)
Enclosure		Dust Proof
Pilot Exhaust		Individual exhaust, Common exhaust for main valve and pilot valve

Electrical entry			Grommet, DIN connector
Coil Voltages	AC 50/60Hz		100 VAC, 200 VAC, 120 VAC, 240 VAC
	DC		6 VDC, 12 VDC, 24 VDC
Allowable Voltage			-15~+10% of rated voltage
Power Consumption	AC	Inrush	5.6 VA (50 Hz), 5.0 VA (60 Hz)
		Holding	3.4 VA (50Hz), 2.3 VA (60 Hz)
	DC		1.8W/2W(With LED)
Indicator Light/Surge Suppressor Circuit	AC		LED, Varistor
	DC		LED, Varistor

※ If provided, use Furbine 0.1(ISO VG #32)

Accessories/Options

Description	Model	Application
Silencer	SN110-01	Rc(PT) 1/8

Model

Piping	Type	Position/Solenoid	(1)Port Size (SUP,CYL.)	Effective orifice mm²(Cv factor) Rc(PT) 1/8	Rc(PT) 1/4	Weight (kgf)
Body Ported	DS3130-○○- 01/02	2 Single Solenoid	PT1/8 · PT 1/4	14.4(0.8)	18(1.0)	0.21
	DS3230-○○- 01/02	2 Double Solenoid		14.4(0.8)	18(1.0)	0.29
	DS3330-○○- 01/02	3Position Closed Center		11.7(0.65)	14.4(0.8)	0.44
	DS3430-○○- 01/02	3Position Exhaust Center		14.4(0.8)	18(1.0)	0.44

(1)Body Ported Valve can be directly mounted on Manifold, type B, Common exhaust
(2) Weight is for Grommet type.
(3) In case of Body Ported, Exhaust Port is only 1/8.

Model for Manifold

Model	Manifold			
	Type		Exhaust	A,B(CYL') Port
DS3○30-○○- 01/02	B Mount	30	Common	Valve

Manifold

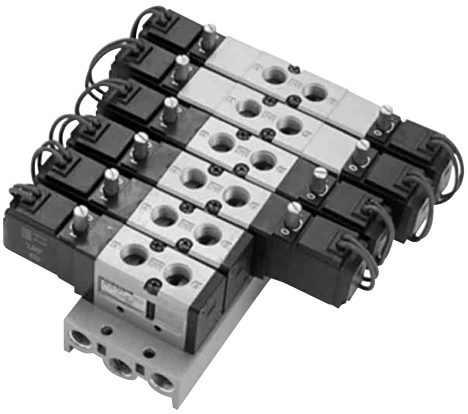

DSM3-30-061

(Example) DSM3-3-061…1pc
DS3130-OGC…02…2 pcs
DS3230-OGC…02…2 pcs
DS3330-OGC…02…2 pcs

Manifold Specifications

Manifold Type	B Mount(Single Base Type)	
Exhaust	Common	Individual(Pilot)
Maximum Stations	20 Stations※	

※ If there are more than 8 stations supply from both sides of supply (SUP.) Port and exhaust from both sides of exhaust(EXH.) Port.

Manifold Type	Moel	Exhaust	Piping Port location			Port Size			Applicable Valve
			P(SUP)	R(EXH)	A,B(CYL)	P(SUP)	R(EXH)	A,B(CYL)	
B Mount	DSM3-30	Common	Side/ Base	Side/ Base	Top/ Valve	1/4	1/4	1/8 · 1/4	DS3○30

How To Order Manifold Base

Manifold Base

DSB3-30 — ○ — **3 0** — **0 5 1**

1 2 3 4 5

1 **Manifold for DS3000 series**

2 **Thread**
Blank : Rc(PT)
DSM3 Series : NPT

3 **Manifold Specifications**
Code : 30
Port location for CYL. port : Valve
Port size for EXH. : Rc(PT) 1/4
Applicable : DS3○30
Note : Please order the appropriate Valve and / or Blanking plate ass'y with Manifold base.

4 **Stations**
02 : 2 stations
⋮ ⋮
20 : 20 stations

5 **Component Symbol**
Code : 1
Passage
P(SUP) : Common
R(EXH) : Common
Piping
A, B(CYL):Top
Applicable Manifold type : 30

Blanking Plate (Including Gasket and Bolts)

DSB3-30

TPC PNEUMATICS

Construction

Single Solenoid

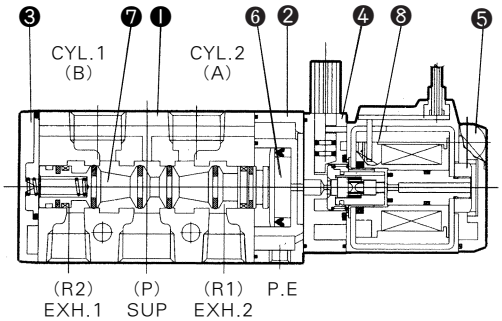

Double Solenoid

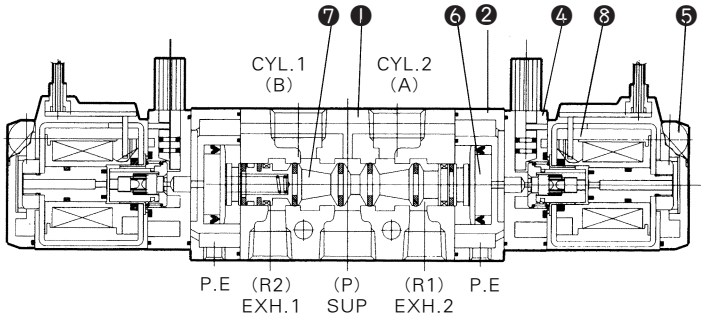

3 Position Closed Center

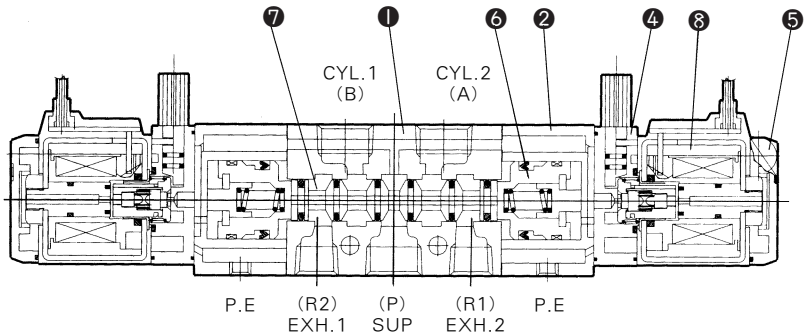

3 Position Exhaust Center

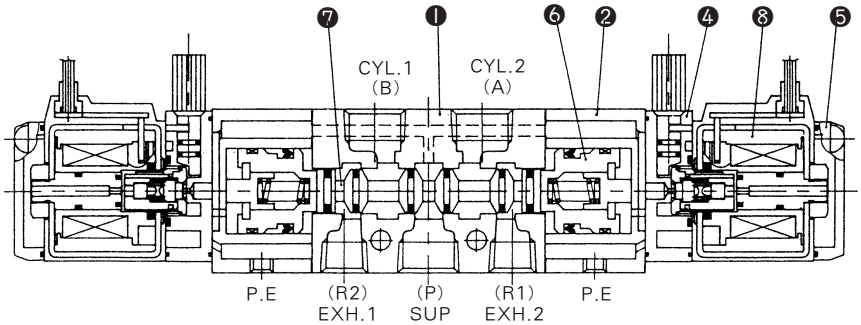

Main parts

No.	Description	Material	Notes
❶	Body	Aluminum die casting	Metallic paint
❷	Adapter Plate	Resin※※	Black*
❸	End Cover	Aluminum Die Casting	Black
❹	Pilot Body	Polyacetal	
❺	Pilot Cover	Polyacetal	
❻	Piston	※※※Polyacetal	
❼	Spool	Aluminum · NBR	
❽	Sub-Plate	Aluminum Die Casting	Metallic

※ 3 Position : Aluminum ※※ 3 position : Aluminum Die Casting
※※※ 3 Position : Metallic Paint

Spare Parts

No.	Description	Material	Notes
❽	Pilot Valve Assembly	-	-

Body Ported/2 Position Single Solenoid

(mm)

Grommet/DS3130-◯G

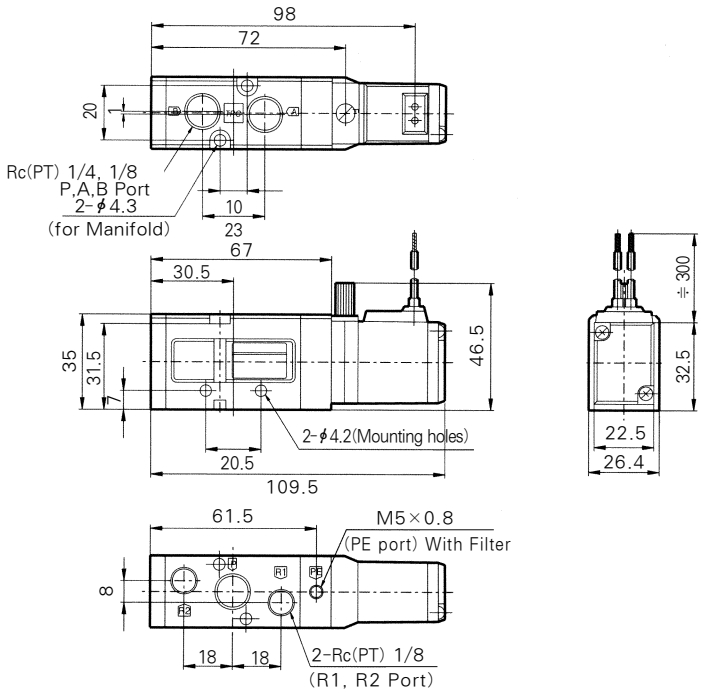

DIN Connector/DS3130-◯D

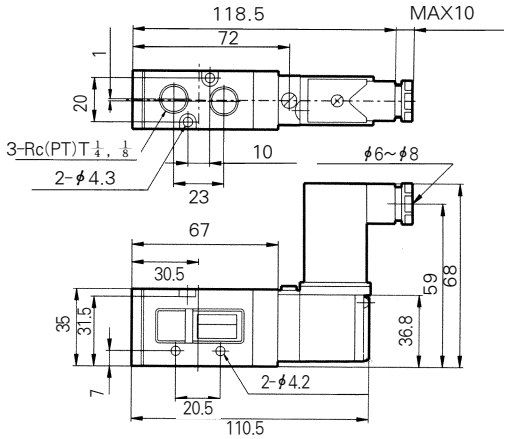

Body Port/2 Position Double Solenoid

(mm)

Grommet/DS3230-◯GC

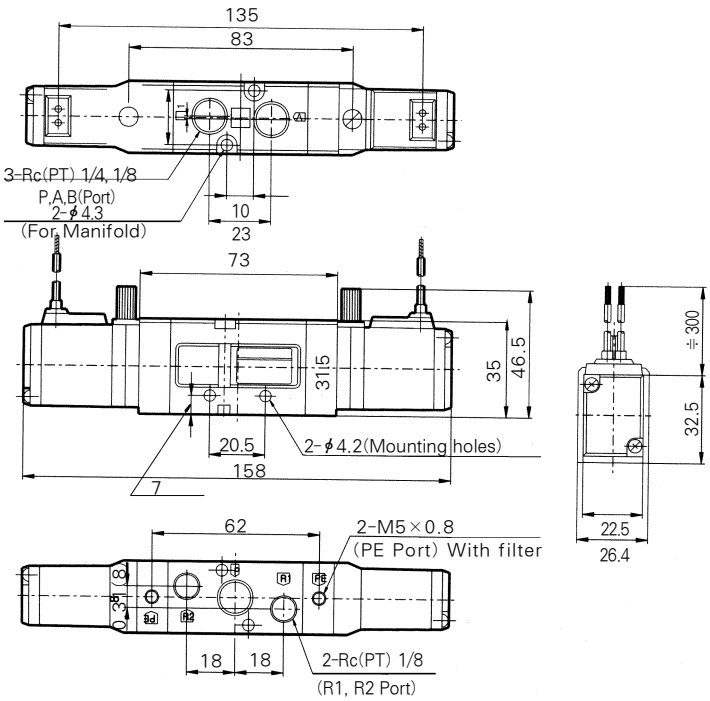

DIN Connector/DS3230-◯DZ

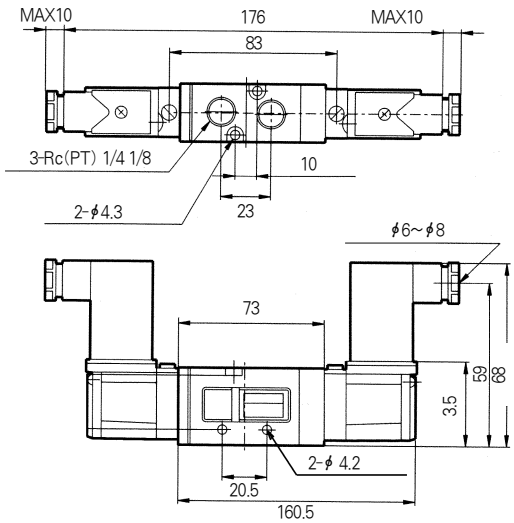

Body Ported/3 Position Double Solenoid

(mm)

Grommet/DS3330-◯G, DS3430-◯G

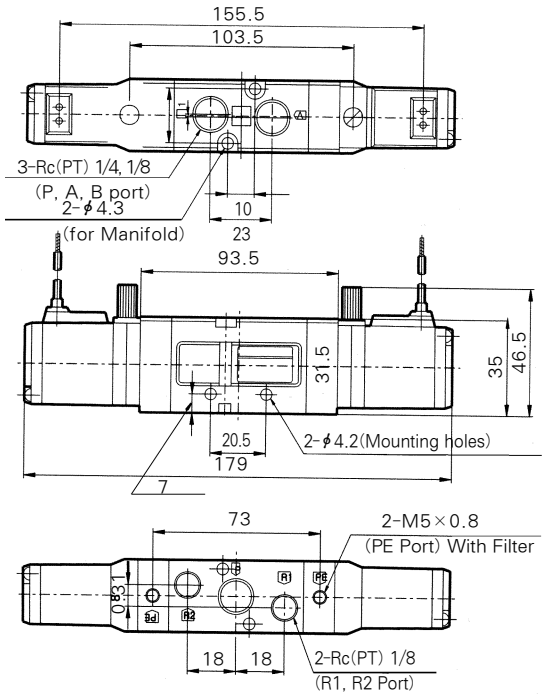

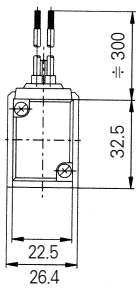

DIN Connector/DS3330-◯DZ
DS3430-◯DZ

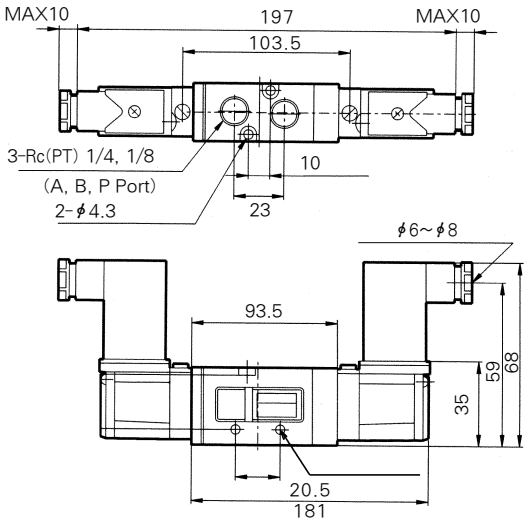

B Mount Type/Dimensions DSM3-30

(mm)

Common Exhaust/DSM3-30-◯◯1

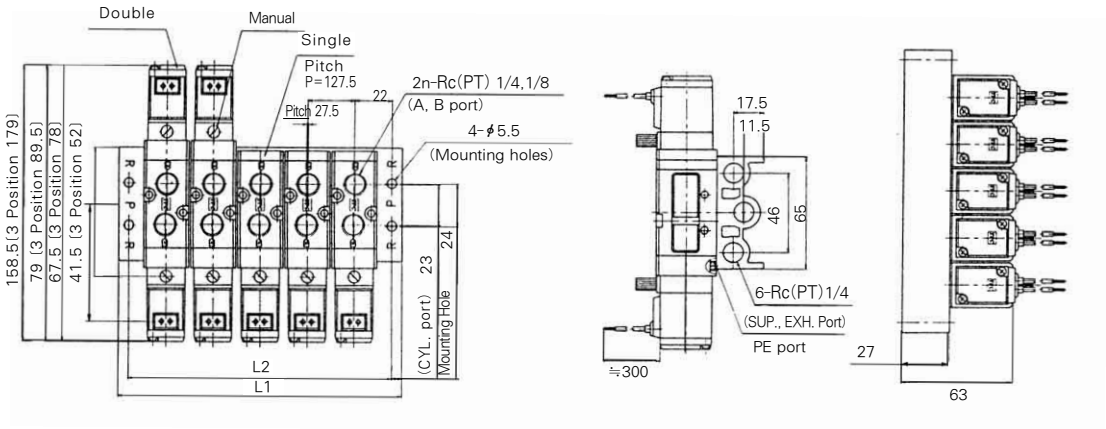

L:Size

N = Stations

mm

Stations	2	3	4	5	6	7	8	9	10	11	12	13	14	15	16	17	18	19	20
L1	83.5	111	138.5	166	193.5	221	248.5	276	303.5	331	358.5	386	413.5	441	468.5	496	523.5	551	578.5
L2	71.5	99	126.5	154	181.5	209	236.5	264	291.5	319	346.5	374	401.5	429	456.5	484	511.5	539	566.5

Series DS5000

Rubber Seal 5 Port Pilot Type

- COMPACT SIZE AND LIGHT WEIGHT
- LARGE FLOW CAPACITY
- LOW POWER CONSUMPTION
- DESIGNED FOR NON-LUBRICATED SERVICE

Symbol

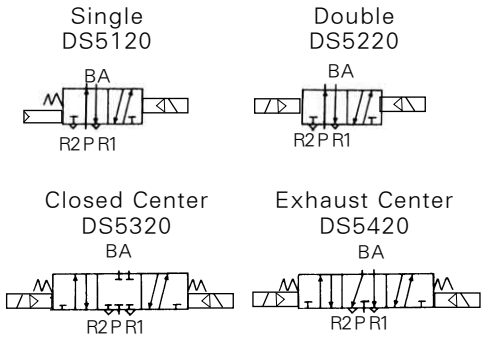

How to Order

DS5 1 2 0 — 1 G ○ — 0 3 - ○

1 2 3 4 5 6 7 8 9

1 DS5000 Series

2 Type of Actuation
- 1 : 2Position Single Solenoid
- 2 : 2Position Double Solenoid
- 3 : 3Position Closed Center
- 4 : 3Position Exhaust Center

3 Body Type
- 2 : For 20 Type Manifold, Body Ported

4 Body Option
- 0 : Standard
- 3 : Common Exhaust for Main valve and Pliot valve

5 Voltage
- 1 : AC100V, 50/60Hz
- 2 : AC200V, 50/60Hz
- 3 : AC120V, 50/60Hz
- 4 : AC240V, 50/60Hz
- 5 : DC24V
- 6 : DC12V
- 7 : DC6V
- 8 : AC24V, 50/60Hz
- 9 : Other

6 Electrical Entry/Indicator Light and Surge Suppressor
- G : Grommet(Lead wire length 300mm)
- DZ : DIN Connector With Indicator light and Surge suppressor

7 Manual Override
- Blank : Non-locking Push type
- C : Knob locking type

8 Port Size(SUP., CYL')
- 03 : Rc(PT) 3/8
- 04 : Rc(PT) 1/2
- (Exhaust Port 3/8)

9 Special Option
- Blank : Standard type
- XC16 : Copper-free

Pilot Valve Assembly

SC2 — 1 G ○ — 50 — ○

1 2 3 4 5

1 For DS5000 series Valve Ass'y

2 Voltage
- 1 : AC100V, 50/60Hz
- 2 : AC200V, 50/60Hz
- 3 : AC120V, 50/60Hz
- 4 : AC240V, 50/60Hz
- 5 : DC24V
- 6 : DC12V
- 7 : DC6V
- 8 : AC24V, 50/60Hz
- 9 : Other

3 Electrical Entry/Indicator Light and Surge Suppressor
- G : Grommet (Lead wire length 300mm)
- DZ : DIN Connector With Indicator light and Surge suppressor

4 Manual Override
- Blank : Non - locking Push type
- C : Knob locking type

5 Special Option
- Blank : Standard type
- XC16 : Copper-free

Specifications

Fluid		Air
Operating Pressure Range	2 Position Single/3 Position	1.5~9 kgf/㎠ {0.15~0.9 MPa}
	2 Position Double	1~9 kgf/㎠ {0.1~0.9 MPa}
Ambient and Fluid Temperature		Max. 50℃
Response Time	2 Position Single/Double	40ms or less {0.5 MPa}
	3 Position	50ms or less {0.5 MPa}
Max. Operea-ting Frequency	2 Position Single/Double	5 Hz
	3 Position	3 Hz
Lubrication		Not required ※
Manual Override		Non-Locking Push Type, Knob locking type
Mounting Position		Free
Impact/Vibration Resistance		30G/5G(8.3~2000Hz)
Enclosure		Dust Proof

Electrical entry			Grommet, DIN Connector
Coil Voltages	AC 50/60Hz		100 VAC, 200 VAC, 120 VAC, 240 VAC
	DC		6 VDC, 12 VDC, 24 VDC
Allowable Voltage			-15~+10% of Rated Voltage
Power consumption	AC	Inrush	5.6VA(50Hz), 5.0VA(60Hz)
		Holding	3.4VA(50Hz), 2.3VA(60Hz)
	DC		1.8W/2W(With LED)
Indicator Light/Surge Suppressor Circuit	AC		LED, Varistor
	DC		LED, Varistor

※ If provided, use Turbine 0.1(ISO VG #32)

Model

Piping	Type	Position Solenoid	(1)Port size (SUP,CYL.)	Effective orifice mm² (Cv factor)		(2)Weight(lbs)	
				Rc(PT)3/8	Rc(PT)1/2	Rc(PT)3/8	Rc(PT)1/2
Body ported	DS5120-○○-03/04	2/Single	Rc(PT)3/8 · Rc(PT)1/2	50(2.8)	58(3.2)	0.38	0.37
	DS5220-○○-03/04	2/Double		50(2.8)	58(3.2)	0.48	0.47
	DS5320-○○-03/04	3/Closed Center		40(2.2)	45(2.5)	0.59	0.58
	DS5420-○○-03/04	3/Exhaust Center		43(2.4)	48(2.7)	0.59	0.58

(1) Body Ported Valve can be mounted directly on (Manifold, type/B, Common exhaust)
(2) Weight is for Grommet type
(3) In case of Body Ported type, Exhaust Port is only 3/8

Accessories/Options

Description	Model	Application
Silencer	SN 300-03	Rc(PT) 3/8

Model for Manifold

Model	Type		Exhaust	A, B(CYL')Port
DS5○20-○○-03/04	B Mount	20	Common	Valve

Manifold

DSM5-20-051

Manifold Specifications

Manifold type	B Mount
Exhaust	Common Exhaust
Maximun Stations	10 Stations

Manifold Type	Model	Exhaust Port	Piping/Port location			Port Size			Applicable Valve
			P	R	A,B	P	R	A,B	
B Mount	DSM5-20	Common	Side	Side	Top	3/8	3/8	3/8,	DS5◯20
			Base	Base	Valve	1/2		1/2	

How to Order

Manifold Base

DSM5 — ◯ **2 0** — **0 5 1**

1 2 3 4 5

1 **Manifold for DS5000 series**

2 **Thread**
Blank : Rc(PT)
UDSM5 Series : NPT

3 **Manifold Specifications**
Code : 20
Port location for CYL' port : Valve
Port size for EXH.
P : Rc(PT) 1/2
R : Rc(PT) 3/8
Applicable : DS5◯20

4 **Stations**
02 : 2 Stations
⋮ ⋮
10 : 10 Stations

5 **Component Symbol**
Code : 1
Passage
P(SUP) : Common
R(EXH) : Common
Piping
A,B(CYL') : Top
Applicable manifold type
: 20

TPC PNEUMATICS

Construction/Parts List

Single Solenoid

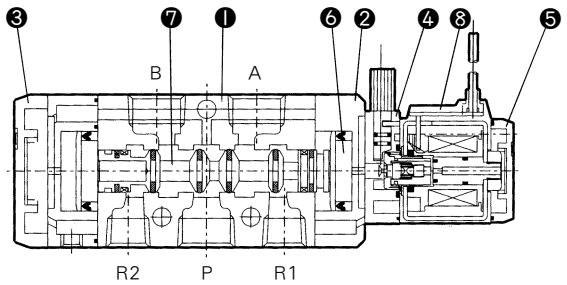

Double Solenoid

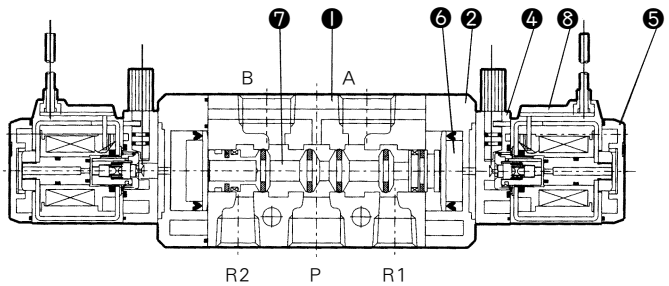

3 Position Closed Center

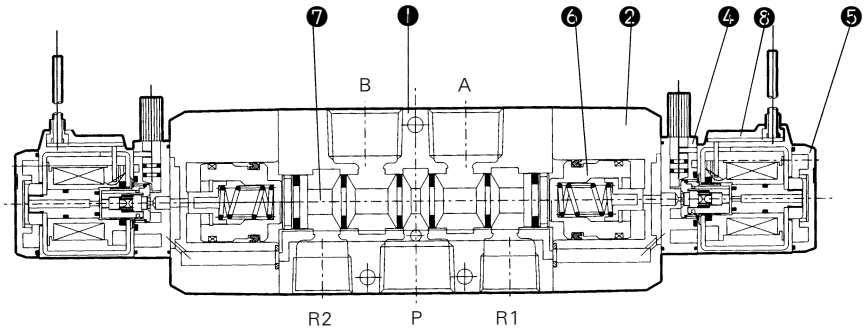

3 Position Exhaust Center

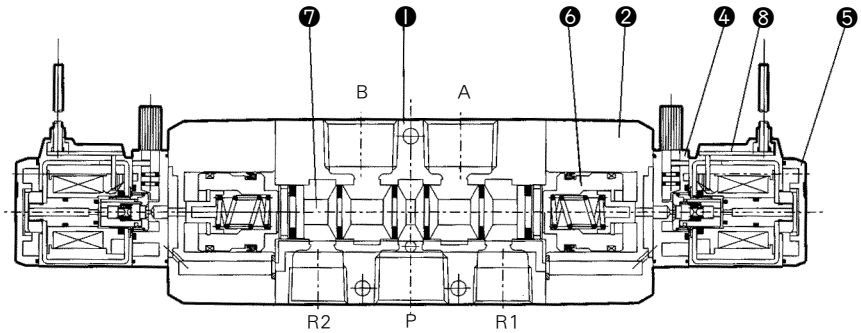

Main Parts

No.	Descripition	Material	Notes
❶	Body	Aluminum Die Casting	Metallic Paint
❷	Adapter Piate	Aluminum Die Casting	Black Paint
❸	End Cover	Aluminum Die Casting	Black Paint
❹	Pilot Body	Polyacetal	
❺	Pilot Cover	Polyacetal	
❻	Piston	(※)Polyacetal	
❼	Spool	Aluminum · NBR	

※ 3 Position : Aluminum

Spare Parts

No.	Descripition	Material	Notes
❽	Pilot Valve Ass'y	–	

Body ported/2 Position Single Solenoid

(mm)

Grommet/DS512 ◯ - ◯ GC

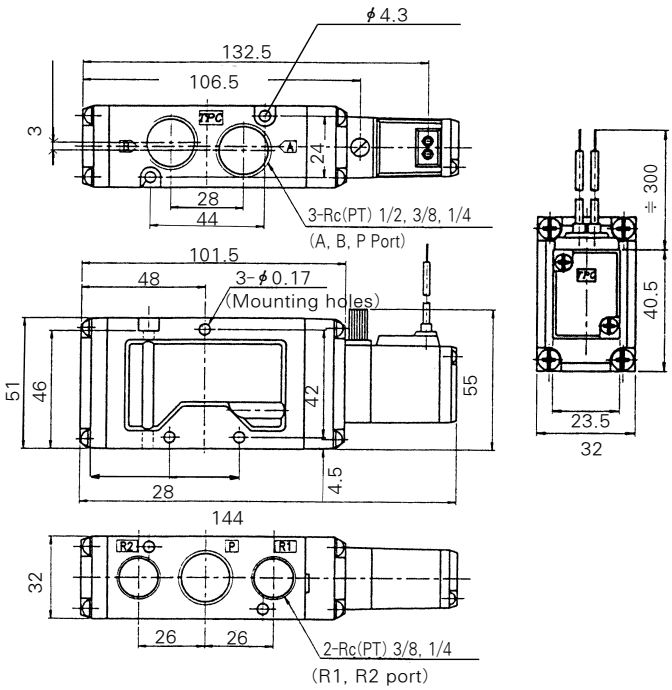

DIN Connector/DS512 ◯ - ◯ DZ

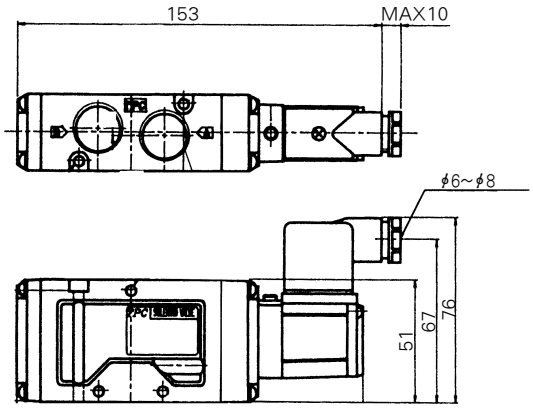

Body ported/2 Position Double Solenoid

(mm)

Grommet/DS522 ◯ - ◯ G

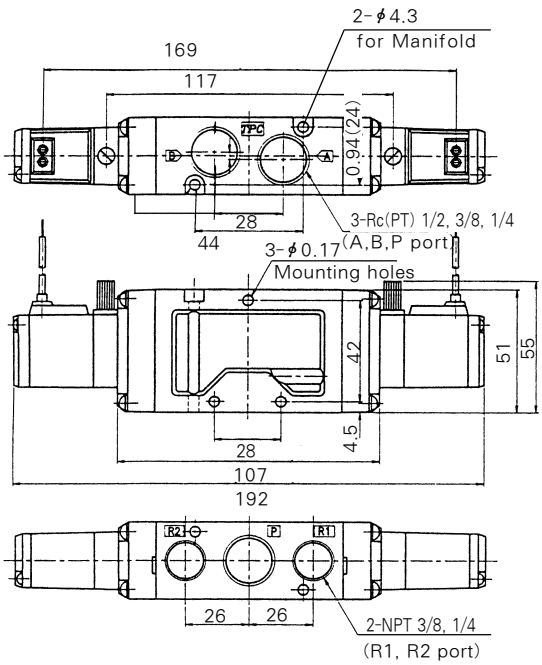

DIN Connector/DS 5220-◯DZ

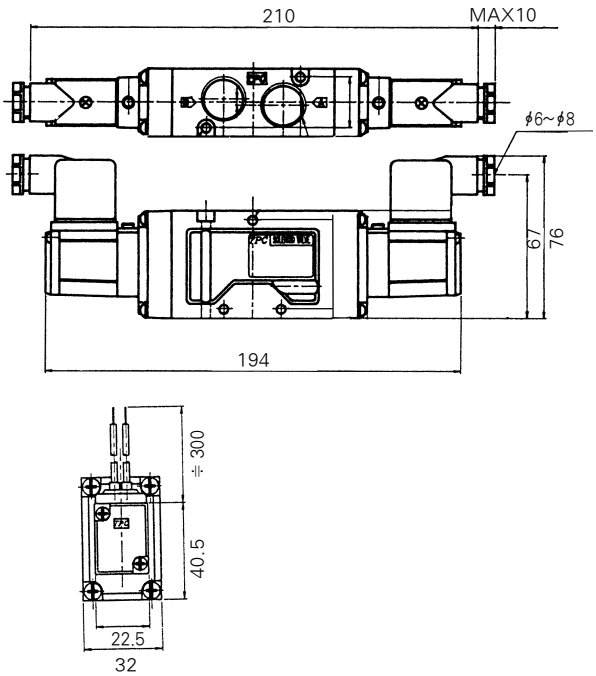

TPC PNEUMATICS

Body ported/3 Position Double Solenoid

(mm)

Grommet/DS 5320 - ◯G, DS5420-◯G

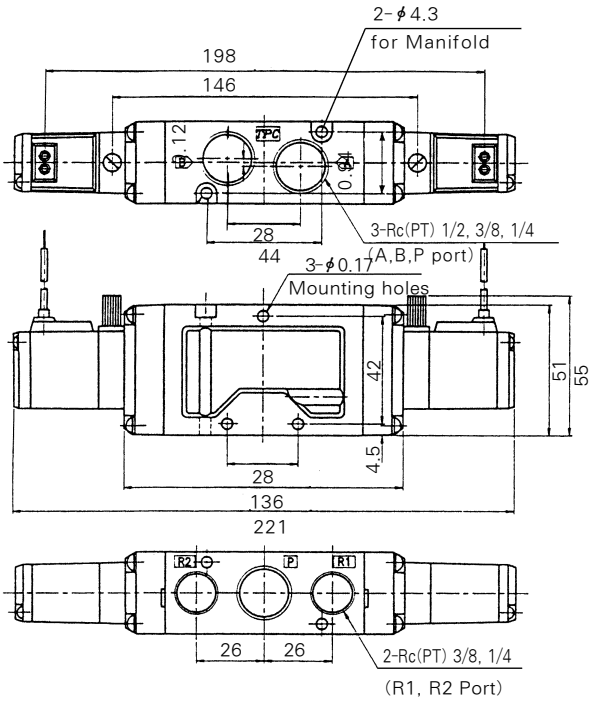

Din Connector / DS5320 - ◯DZ
DS5420 - ◯DZ

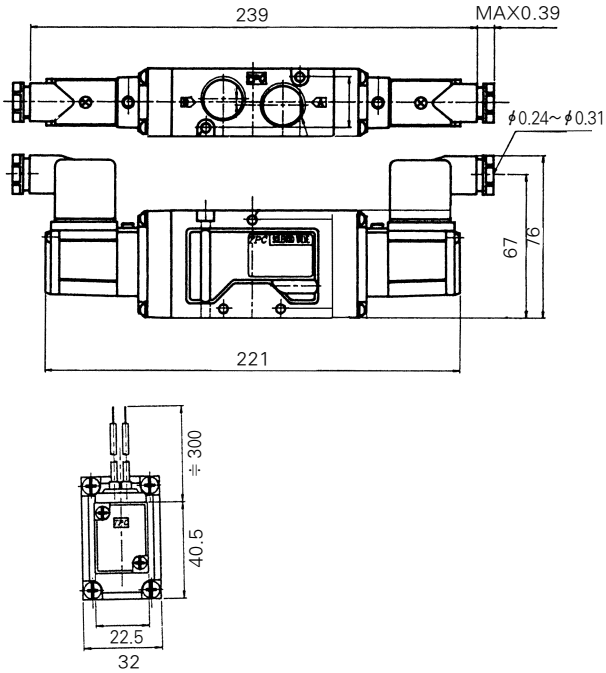

B Mount Type/Dimensions DSM5-30

(mm)

Common Exhaust/DSM5 - 20 - ◯◯1

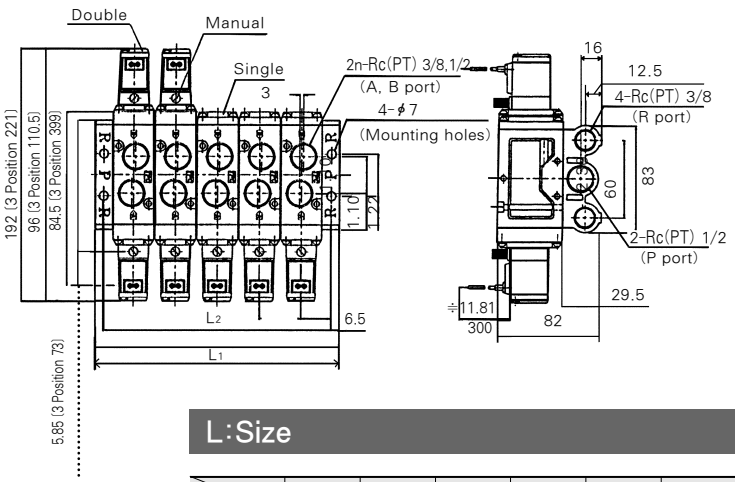

(mm)

L:Size

n:station NO.

L \ n	2	3	4	5	6	7	8	9	10
L1	93	126	159	192	225	258	291	324	357
L2	80	113	146	179	212	245	278	311	344

Precautions

Use as a 3 Port Valve

Plugging one of the Cylinder Ports (A or B) enables use as a 3 Port Valve. It should not be used in special applications such as a Non-leakage Valve. Make sure the Exhaust port is open if used as a 3 Port Valve.

Plug		A Port (CYL.1 Port)	B Port (CYL.2 Port)
Function		N.C	N.O
Sole-noid	Single	(X)Plug 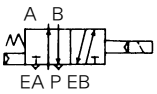	(X)Plug 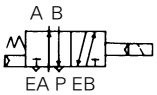
	Double	(X)Plug 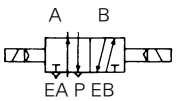	(X)Plug 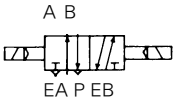

Mounting

1. Make sure that Chips, Cutting Oil, Dust, etc. are cleaned up before mounting.
2. When screwing the pipe or fitting into a port, ensure that Chips or Sealing material will not get in.
3. When using a DS3320 or DS5330 Closed Center type, make sure piping leakage does not occur between Valve and Cylinder.
4. A Filter has already been installed to the Pilot Exhaust(P.E.) Port, so if a Silencer is to be added, first remove the Filter.
5. Clamp torque of piping.

Thread	Appropriate Clamp Torque kgf/cm(N · m)
1/8	70~90(7~9)
1/4	120~140(12~14)

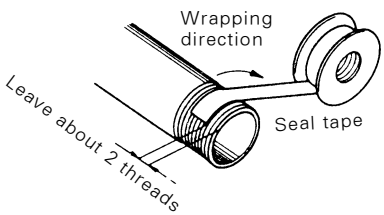

Use at Low Temperature

Available for use under -10℃, however care should be taken to protect against freezing moisture.

Lubricant

1. Valves are pre-lubricated - no further lubrication is necessary.
2. If a lubricant is used, please use Turbine Oil (ISO VG32).

Momentary Energizing

When using a Double Solenoid type with momentary energizing, make sure the energizing time more than 0.05 seconds.

Leakage Voltage

1. For the leakage current, residual leakage voltage of AC coil must be less than 20% of the rated voltage, and leakage voltage of DC coil must be less than 3% of the rake voltage when the switch is off.
2. When using a C-R element, it will increase the leakage voltage.

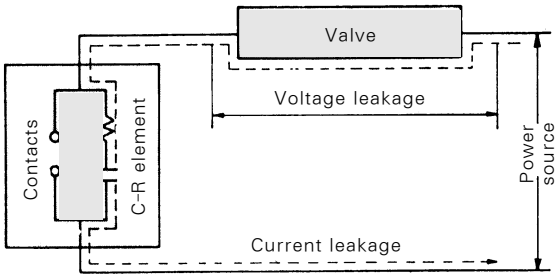

Remarks

Port	DS3000, DS5000
Supply	P(SUP)
Cylinder	A(CYL.2), B(CYL.1)
Exhaust	R1(EXH2), R2(EXH1)
Symbol (Single solenoid)	P : SUP. B : CYL.1 A : CYL.2 R1 : EXH.1 R2 : EXH.2 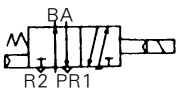

Series DP300 · 3000 · 5000

3 · 5 Port Air Pilot Valve

DP3230-02

DP3130-02

- COMPACT SIZE AND LIGHT WEIGHT
  - 26.4mm Width (Series DP300, DP3000)
  - 32 mm Width (Series DP5000)
- LARGE FLOW CAPACITY
  - Cv. 1.0 - Rc(PT) 1/4(Series DP300,DP3000)
  - Cv. 3.2 - Rc(PT) 1/2(Series DP5000)

Symbol

Single

DP3000/5000

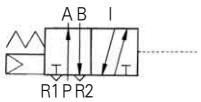

Double

DP3000/5000

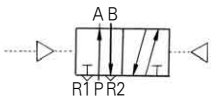

DP 300

N • C

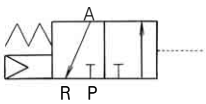

N • O

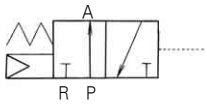

How to Order

DP3000

DP3 1 3 0 — 02

1 2 3 4

1 Type of Actuation
- 1 : Single Pilot type
- 2 : Double Pilot type

2 Body Type
- 3 : For 30 type Manifold (Body Ported)

3 Body Specifications
- 0 : Standard

4 Port Size(P, A, B)
- 01 : Rc(PT) 1/8
- 02 : Rc(PT) 1/4
- ※ Exhaust Port is only 1/8

DP5000

DP5 1 2 0 — 03

1 2 3 4

1 Type of actuation
- 1 : Single pilot type
- 2 : Double pilot type

2 Body Type
- 2 : For 20 type Manifold (Body Ported)

3 Body Specifications
- 0 : Standard

4 Port Size(P, A, B)
- 03 : Rc(PT) 3/8
- 04 : Rc(PT) 1/2
- ※ Exhaust Port is only 3/8

DP300

DP3 0 1 — 02

1 2 3

1 Type of Actuation
- 0 : N · C/N · O

2 Body Type
- 1 : Body Ported

3 Port size(P, A, R)
- 01 : Rc(PT) 1/8
- 02 : Rc(PT) 1/4

Specifications

Fluid	Air		
Operating Pressure Range	2 Position	Single	1.5~9 kgf/㎠ {0.15~0.9 Mpa}
		Double	1~9 kgf/㎠ {0.1~0.9 Mpa}
Ambient and Fluid Temperature	MAX. 60°C		
Pilot Pressure Range	2 Position	Single	(Note2) 1.7~9 kgf/㎠ {0.16~0.9 Mpa}
		Double	1~9kgf/㎠ {0.1 ~ 0.9 Mpa}
Lubrication	Not required		
Impact/Vibration Resistance	30 / 5 (8.3 ~ 2000Hz)		
Mounting Position	Free		
(Note 1) Effective Orifice ㎟ (Cv factor)	Rc(PT) 1/8	14 (0.8)	
	Rc(PT) 1/4	17.5 (1.0)	
	Rc(PT) 3/8	48 (2.7)	
	Rc(PT) 1/2	56 (3.1)	
Pilot Port	Rc(PT) 1/8 Common use		

(Note 1) Cv-Capacity Co-efficients(Flow Factors)
(Note 2) The minimum pressure for PILOT should be higher than "A"
P : Supply pressure. A : 0.4×P+14.224(PSI)

※cm^2 = 0.0016 in^2

Model

Piping	Type	Position/Solenoid	Port size	Effective Orifice ㎟ (Cv factor)	
				Rc(PT) 1/8	Rc(PT) 1/4
Body Ported	DP300	2 Position Single	Rc(PT) 1/8 Rc(PT) 1/4	19.2 (1.07)	22 (1.2)
	DP3130	2 Position Single	Rc(PT) 1/8	14 (0.8)	18 (1.0)
	DP3230	2 Position Double	Rc(PT) 1/4	14 (0.8)	18 (1.0)
	DP5120	2 Position Single	Rc(PT) 3/8	Rc(PT) 3/8	Rc(PT) 1/2
			Rc(PT) 1/2	48 (2.8)	58 (3.2)
	DP5220	2 Position Double		48 (2.8)	56 (3.2)

3 Port

(mm)

DP 301-01
02

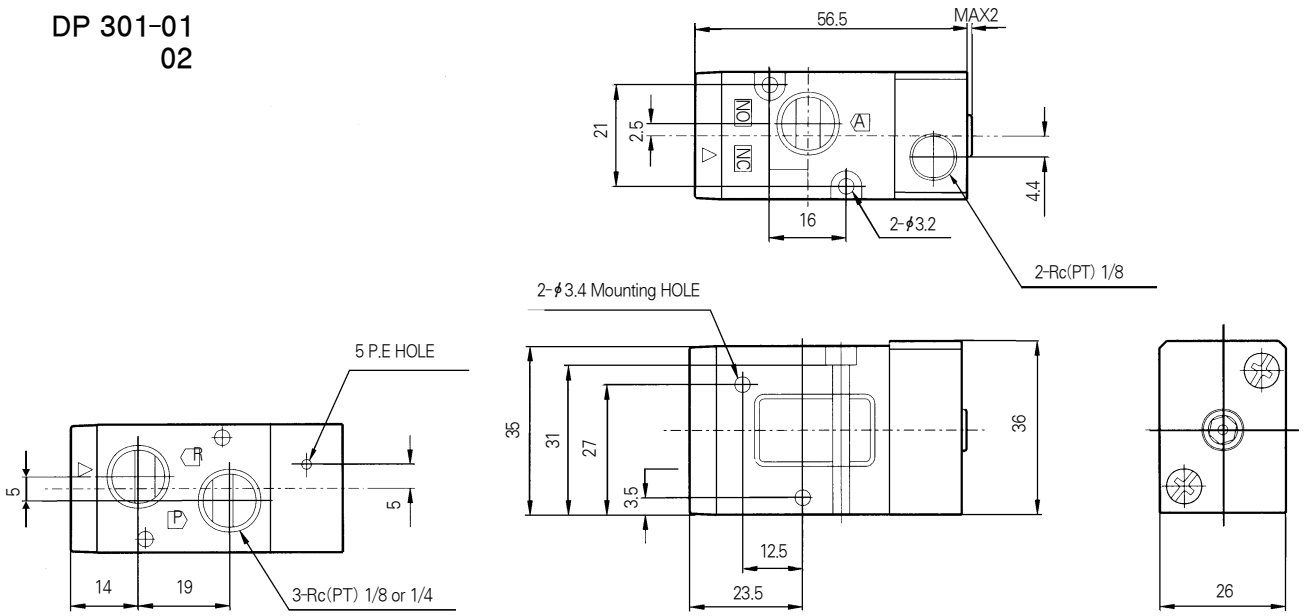

5 Port/2 Position Single, Double

(mm)

DP3130-01
02

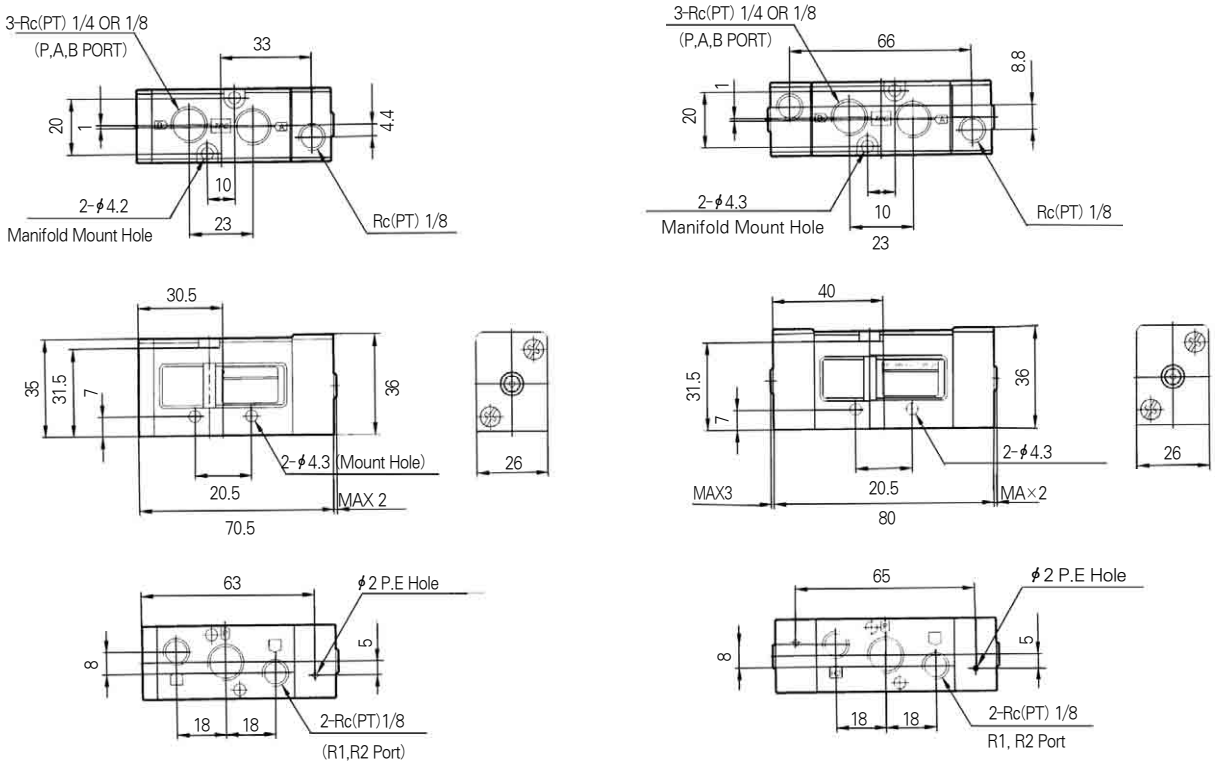

5 Port/2 Position Single, Double

mm

DP5120-03
04

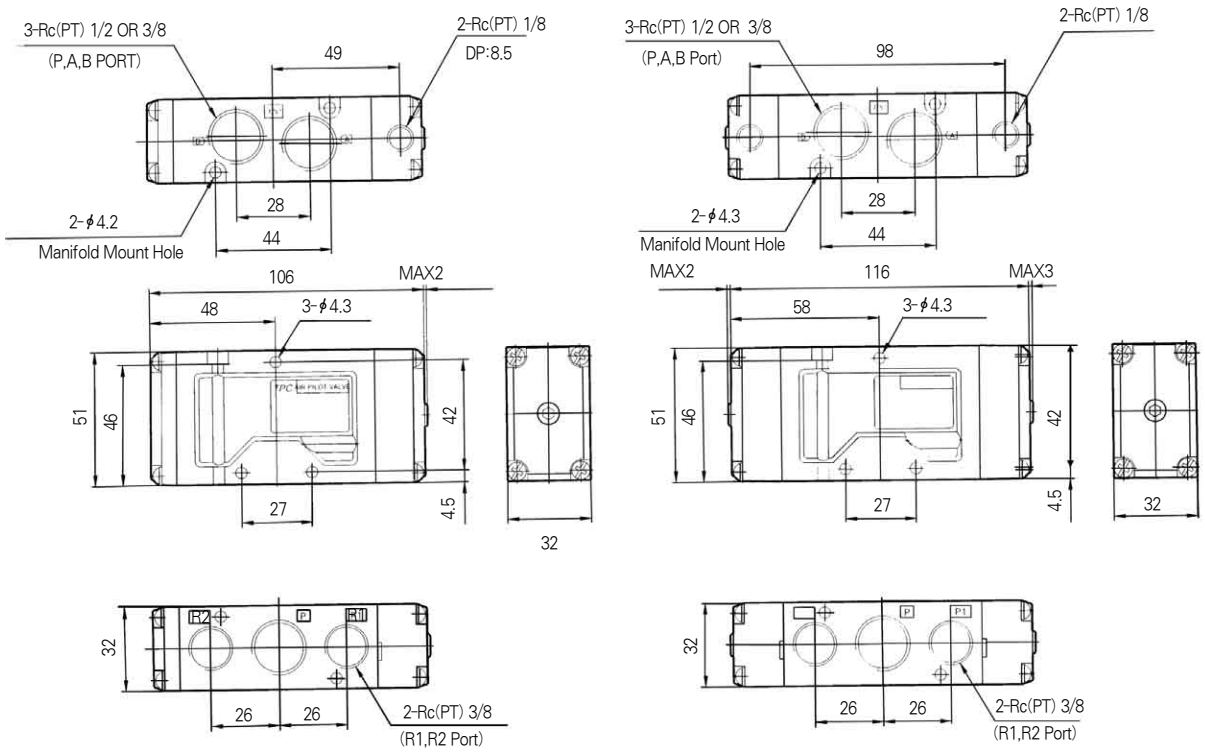

DP5220

5 Port Pilot Solenoid/Sub Base Type

Series ***DS3000*** *(Base Mounted)*

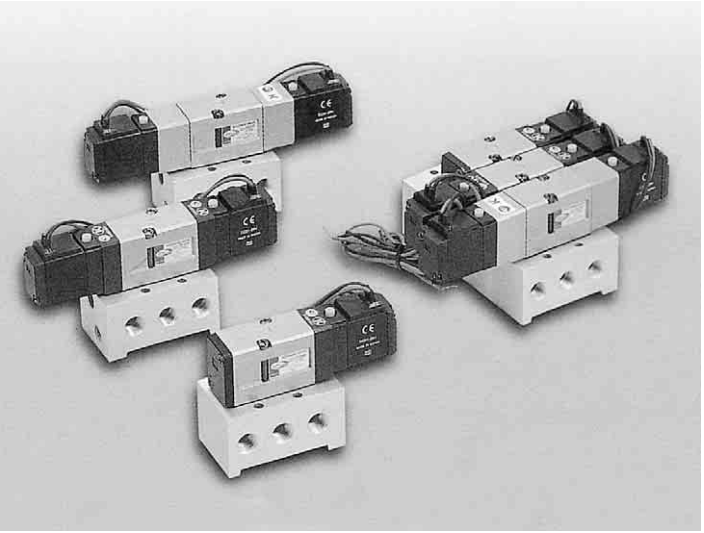

- COMPACT SIZE AND LIGHT WEIGHT
- LARGE FLOW CAPACITY/Cv0.9
- LOW POWER CONSUMPTION/1.8WDC
- DESIGNED FOR NON-LUBRICATED SERVICE

Single
DS 3100

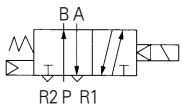

Double
DS 3200

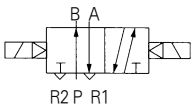

Closed Center
DS 3300

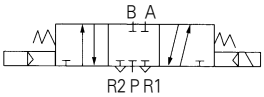

Exhaust Center
DS 3400

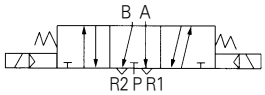

Specifications

Fluid			Air
Operating Pressure Range	2 Position Single · 3Position		1.5~9 kgf/㎠ {21~128psi}
	2 Position Double		1~9 kgf/㎠ {14~128psi}
Ambient and Fluid Temperature			50℃(122℉)
Response Time	2 Position Single/Double		30 ms or less {0.5 Mpa}
	3Position		40 ms or less {0.5 Mpa}
Max. Operating Frequency	2 Position Single/Double		5 Hz
	3 Position		3 Hz
Lubrication			Not Required※
Manual Override			Non-Lock Push Type, Knob Lock Type
Mounting Position			Free
Impact/Vibration Resistance			30G/5G(8.3~200Hz)
Enclosure			Dust Proof
Pilot Exhaust			Individual exhaust. Common exhaust for main valve and pilot valve
Electical entry			Grommet, DIN Connector
Coil Voltages	AC 50/60Hz		100V, 200V, 120V, 240V
	DC		6V, 12V, 24V
Allowable Voltage			-15~+10% of rated voltage
Power Consumption	AC	Inrush	5.6VA(50Hz), 5.0VA(60Hz)
		Holding	3.4VA(50Hz), 2.3VA(60Hz)
	DC		1.8W/2W(With LED)
Indicator Light/Surge Suppressor Circuit	AC		LED, Varistor
	DC		LED, Varistor
Effective Orifice mm^2 (Cv Factor)	2 Position		16(0.9)
	3 Position	Closed Center	12.5(0.7)
		Exhausted Center	16(0.9)

※ If provided, use Turbine 1Class(ISO VG #32)

TPC PNEUMATICS

How To Order

Valve
(Including Gasket & Bolts)

DS 3 1 0 0 – 5 DZ □ – ○

1 2 3 4 5 9

Valve + Sub Base

DS 3 1 0 0 – 5 DZ □ – □ 8A ○ ○

1 2 3 4 5 6 7 8 9

1 Type of Actuation
- 1 : 2 Position/Single Solenoid
- 2 : 2 Position/Double Solenoid
- 3 : 3 Position/Closed Center
- 4 : 3 Position/Exhaust Center

2 Body Option
- 0 : Standard
- 3 : Common Exhaust for Main and Pliot Valve

3 Voltage
- 1 : AC110V, 50/60Hz
- 2 : AC220V, 50/60Hz
- 3 : AC120V, 50/60Hz
- 4 : AC240V, 50/60Hz
- 5 : DC24V
- 6 : DC12V
- 7 : DC6V
- 8 : AC24V(50/60Hz)
- 9 : Other

4 Electronic Entry/Indicator
Light and Surge Suppressor
- G : Grommet (Lead wire length 300mm)
- DZ : DIN Connector with Indicator light and Surge Suppressor
- N : DIN Connector Type

5 Manual Override
- Blank : Non-locking PushType
- L : Knob locking Type

6 Thread
- Blank : Rc(PT)
- U : NPT

7 Port Size (Sup., CYL)
- Blank : Valve Body Only (without sub Plate)
- 8A : Rc(PT)1/4, NPT1/4 (with sub Plate)

8 One-Touch Fitting
- Blank : Without one-Touch Fitting
- 06 : ϕ6 One-Touch Fitting
- 08 : ϕ8 One-Touch Fitting

9 Special Option
- Blank : Standard Type
- XC16 : Copper-Free

Manifold

DSM3 – 00 – 02 – 06

1 2

1 Stations

01 : 1 Station	06 : 6 Stations
02 : 2 Stations	07 : 7 Stations
03 : 3 Stations	08 : 8 Stations
04 : 4 Stations	09 : 9 Stations
05 : 5 Stations	10 : 10 Stations

2 One-Touch Fitting
- 06 : ϕ6 One-Touch Fitting
- 08 : ϕ8 One-Touch Fitting

Blanking Plate
(Including Gasket & Bolts)

DSB 3 — 00

Dimensions/2 Position Single Solenoid

(mm)

Grommet/DS3100-◯G

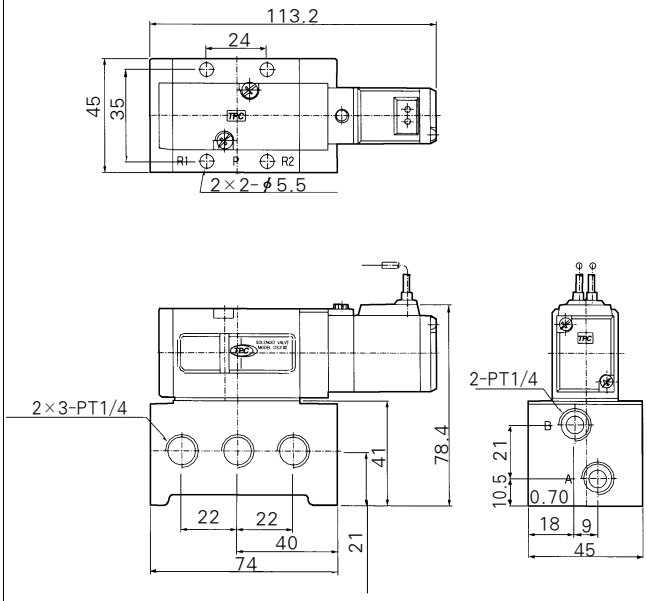

DIN Connector/DS3100-◯DZ

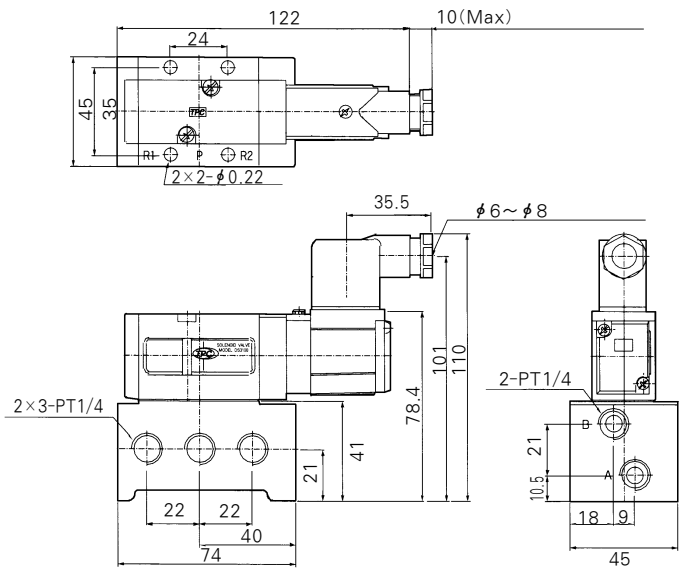

Dimensions/2 Position Double Solenoid · 3 Position Closed Center · Exhaust Center

(mm)

Grommet/DS3200, 3300, 3400-◯G

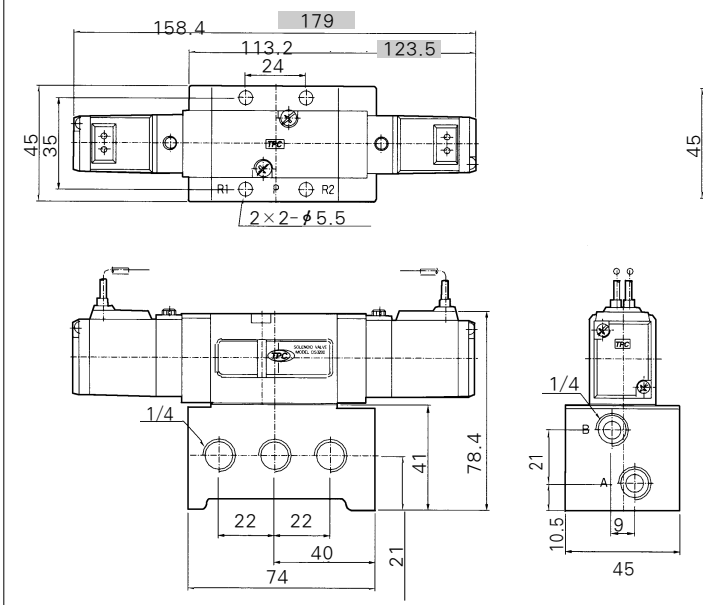

DIN Connector/DS3200, 3300, 3400-◯DZ

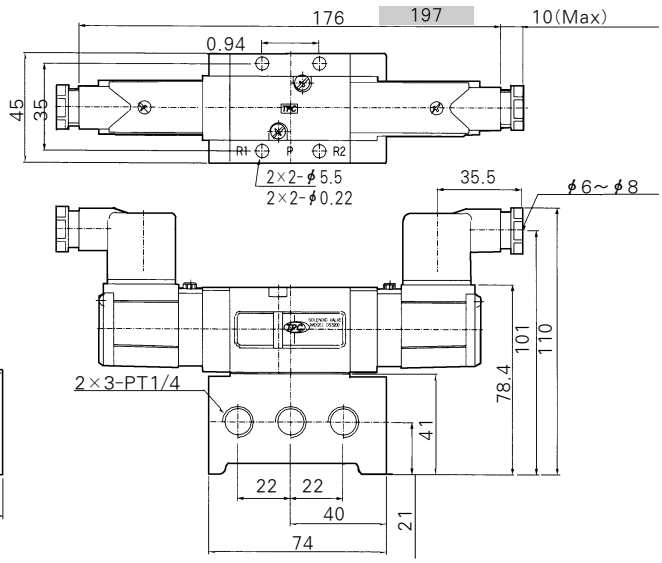

※ :3Position

Dimensions/Manifold ASS'Y

(mm)

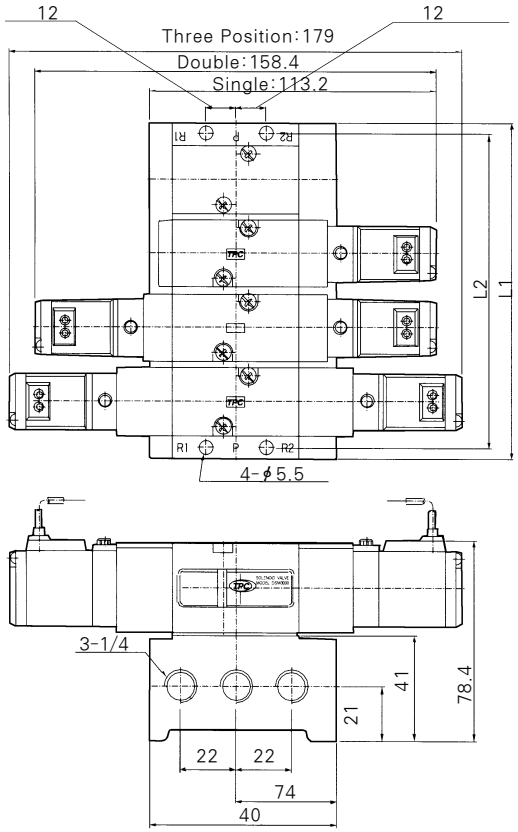

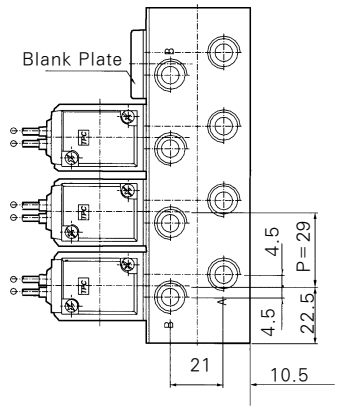

(mm)

Stations	1	2	3	4	5	6	7	8	9	10
L1	45	74	103	132	161	190	219	248	277	306
L2	35	64	93	122	151	180	229	238	267	296

Use as a 3 Port Valve

Plugging one of the Cylinder Ports (A or B) enables use as a 3 Port Valve. It should not be used in special applications such as a Non-leakage Valve. Make sure the Exhaust port is open if used as a 3 Port Valve.

Plug		A Port	B Port
Function		N.C	N.O
Sole-noid	Single	(X)Plug 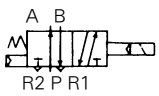	(X)Plug 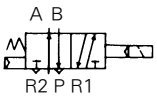
	Double	(X)Plug 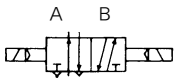	(X)Plug 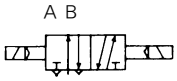

Mounting

① Make sure that Chips, Cutting Oil, Dust, etc. are cleaned up before mounting.
② When screwing the pipe or fitting into a port, ensure that Chips or Sealing material will not get in.
③ A Filter has already been installed to the Pilot Exhaust(P.E.) Port, so if a Silencer is to be added, first remove the Filter.
④ Clamp torque of piping.

Thread	Appropriate Clamp Torque kgf/cm(N · m)
1/8	70~90(7~9)
1/4	120~140(12~14)

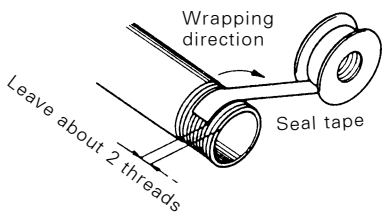

Precautions

Use at Low Temperature

Available for use under 14℉(-10℃), however care should be taken to protect against freezing moisture.

Lubricant

① Valves are pre-lubricated - no further lubrication is necessary.
② If a lubricant is used, please use Turbine Oil (ISO VG32).

Momentary Energizing

When using a Double Solenoid type with momentary energizing, make sure the energizing time more than 0.05 seconds.

Leakage Voltage

① For the leakage current, residual leakage voltage of AC coil must be less than 20% of the rated voltage, and leakage voltage of DC coil must be less than 3% of the rake voltage when the switch is off.
② When using a C-R element, it will increase the leakage voltage.

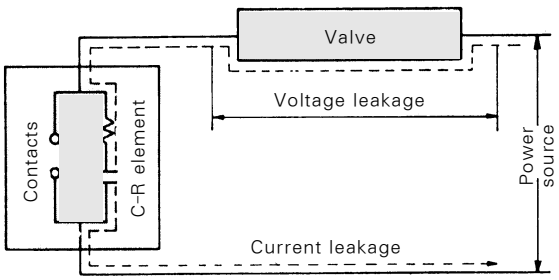

Remarks

Port	DS3000
Supply	P
Cylinder	A, B
Exhaust	R1, R2
Symbol (Single solenoid)	P : SUP. B : CYL.1 A : CYL.2 R1 : EXH.1 R2 : EXH.2 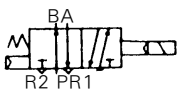

Electrical Connection

For the DIN Connection and Terminal connection (with surge voltage protion circuit), inner connections are as follows.

DIN connection

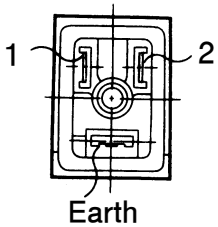

Terminal No.	1	2
DIN connection	+	-

Indicator Light/Surge Voltage Suppressor Circut

Voltage	AC, DC
24V	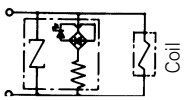 EZ, TZ, DZ (Less than 24V)
200V	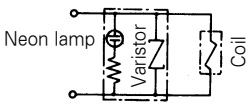 EZ, TZ, DZ (200V or more)

Series DS 2000

Elastic Seal 5 Port Pilot Type

- COMPACT SIZE AND LIGHT WEIGHT - 18mm WIDTH
- LARGE FLOW CAPACITY - Cv 0.53 EFFECTIVE ORIFICE 9.5mm²
- LOW POWER CONSUMPTION - 1.7W(DC)
- MANY VARIATIONS AVAILABLE

Symbol

Single
DS 2120

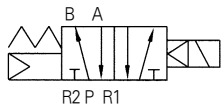

Double
DS 2220

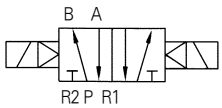

How To Order

DS 2 1 2 0 — 1 G — 01

(1) (2) (3) (4) (5) (6) (7)

1 Series
DS2000/UDS2000 Series

2 Type of Actuation
1 : 2 Position Single
2 : 2 Position Double

3 Body Type
2 : Body Ported Type

4 Body Option
O : Standard

5 Voltage
1 : AC 110V(50/60Hz)
2 : AC 220V(50/60Hz)
3 : AC 120V(50/60Hz)
5 : DC 24V
6 : DC 12V

6 Electrical Entry/ Indicator Light and Surge Suppresson
G : Grommet
H : Plug connector type(With indicator Light)
HZ: Plug connector type(With indicator Light and surge valtage suppressor)
※ Plug connetor type of DC has only HZ type

7 Port Size
01 : 1/8

Specifications

Model			DS2120	DS2220
Fluid			Air	
Operating Pressure Range(kgf/㎠)			1.5~7	1~7
Effective Orifice ㎟(Cv)			9.5(0.53)	
Ambient and Fluid Temperature			Max. 50℃	
Response Time(5kgf/㎠)			20ms or less	
Max. Operating frequency			10c/s	
Lubrication			Not required	
manual Override			Non-locking Push Type	
Impact/Vibration Resistance			30G/5G(8.3~2000HZ)	
Enclosure			Dust Proof	
Coil Valtage			AC 50/60HZ 110V, 120V, 220V, 240V, DC12V, 24V	
Allowable Voltage			-15%~+10% of Rated Valtage	
Coil Insulation			Class B or equivalent(130℃)	
Apparent Power	AC	Inrush	4.5VA(50HZ), 4.2VA(60HZ)	
		Holding	3.0VA(50HZ), 2.6VA(60HZ)	
Power Consumption	DC		1.7W	
Weight(gf)			100	150
Surge suppressor circuit			AC:Varistor , DC:Diode	
Indicator Light			LED	

Construction/Parts List

Main Parts

No.	Description	Material
❶	Body	Al Die Casting
❷	Aolapter Plate	Polyacetal
❸	Piston	Polyacetal
❹	Spool	AL
❺	End Cover	Polyacetal
❻	O-Ring	NBR
❼	Spring	SMS
❽	Coil Ass'y	

Single Solenoid

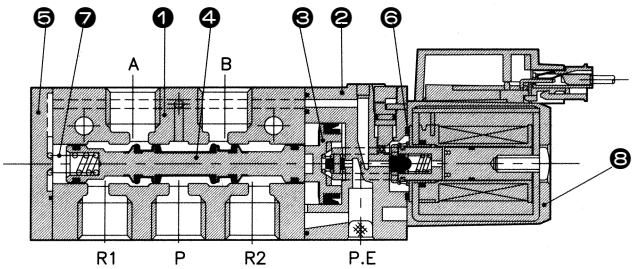

Double Solenoid

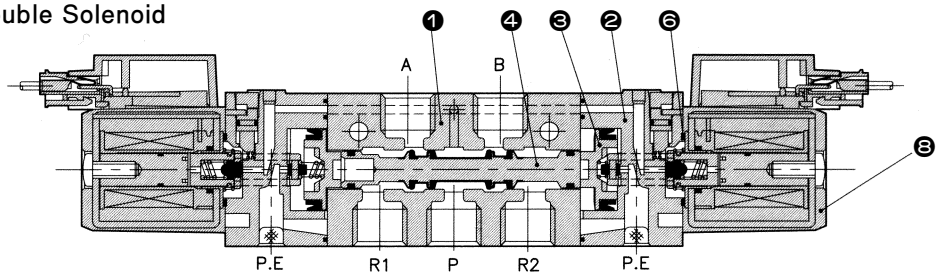

Body Ported/2 Position Single Solenoid

(mm)

Grommet(G) DS 2120 - ○G

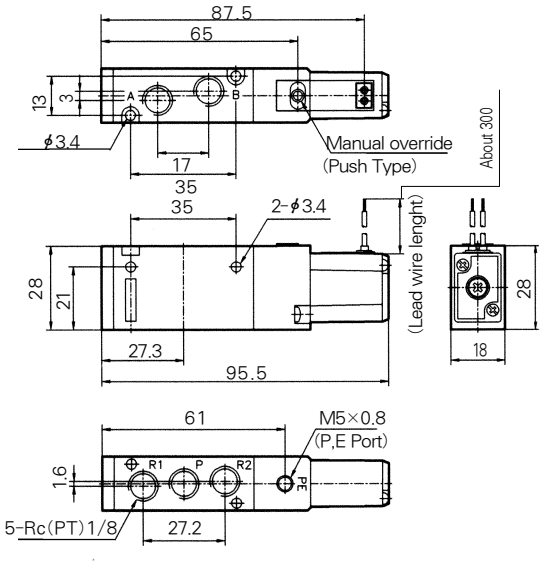

Plug Connector Type(H, HZ) DS2120 - ○ H HZ

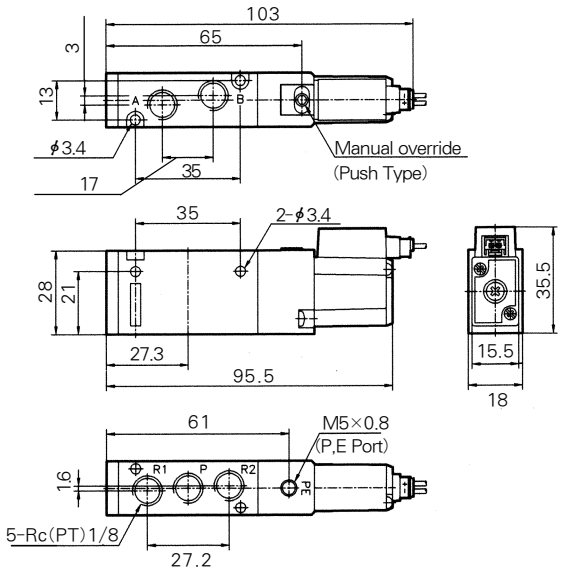

Body Ported/2 Position Double Solenoid

(mm)

Grommet(G) DS 2220 - ○G

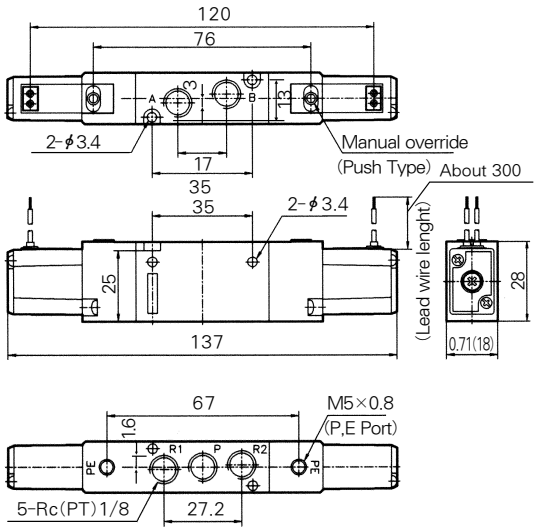

Plug Connector Type(H, HZ) DS2220 - ○ H HZ

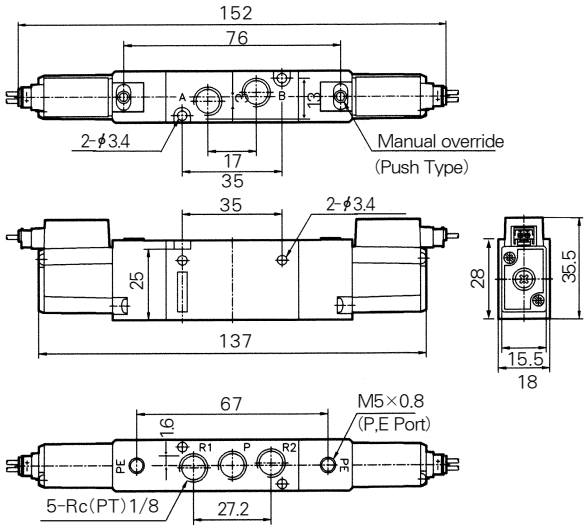

Manifold

DW
DS
DV
DX2
DP
DM
DH
DT
DC

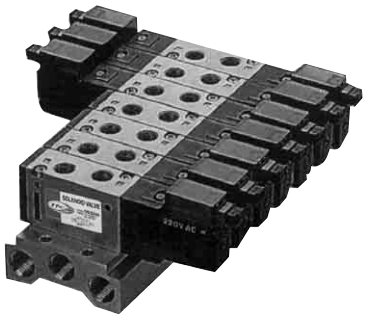

Manifold Specifications

Manifold Type	B Mount
P(SUP) · R(EXH)Exhaust	Common Exhaust SUP · EXH
Maximum Stations	20Stations

Manifold Specifications

Model	Exhaust	Piping/Port Location			Port Size Rc(PT)	Applicable Valve
		P(SUP)	R(EXH)	A.B(CYL)		
B	Common	Side	Side	Top	1/8	DS2◯20
		Base	Base	Valve		

How To Order

Manifold Base

DSM2 — 2 0 — 051

1 — 2

1 Manifold Specifications
20 : Manifold Specifications

2 Stations
2~20Stations

B Mount Type/DSM-20

(mm)

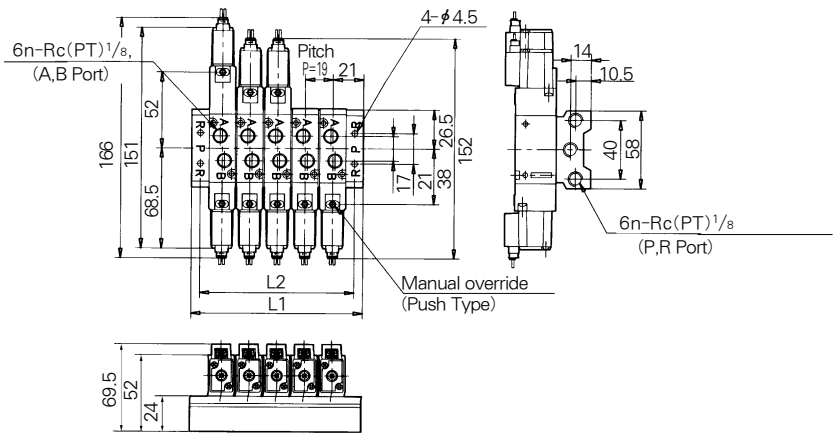

L:Size

(mm)

L \ N	2	3	4	5	6	7	8	9	10	11	12	13	14	15	16	17	18	19	20
L1	59	78	97	116	135	154	173	192	211	230	249	268	287	306	325	344	363	382	401
L2	49	68	87	106	125	144	163	182	201	220	239	258	277	296	315	334	353	372	391

Precautions

Use as a 3 Port Valve

Plugging one of the Cylinder Ports (A or B) enables use as a 3 Port Valve. It should not be used in special applications such as a Non-leakage Valve. Make sure the Exhaust port is open if used as a 3 Port Valve.

Plug		A Port (CYL.1 Port)	B Port (CYL.2 Port)
Function		N.C	N.O
Sole-noid	Single	(X)Plug 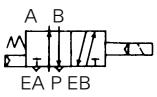	(X)Plug 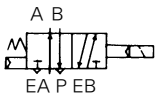
	Double	(X)Plug 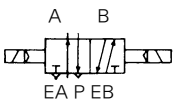	(X)Plug 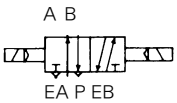

Mounting

1. Make sure that Chips, Cutting Oil, Dust, etc. are cleaned up before mounting.
2. When screwing the pipe or fitting into a port, ensure that Chips or Sealing material will not get in.
3. A Filter has already been installed to the Pilot Exhaust(P.E.) Port, so if a Silencer is to be added, first remove the Filter.
4. Clamp torque of piping.

Thread	Appropriate Clamping Torque kgf · cm(N · m)
1/8″	70~90(7~9)
1/4″	120~140(12~14)

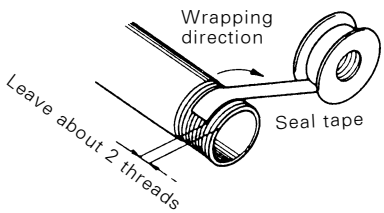

Use at Low Temperature

Available for use under -10℃, however care should be taken to protect against freezing moisture.

Quality Of Fluid

1. Filtration to 5 Microns is sufficient.
2. Large quantity of drainage causes incorrect operation of pneumatic products as well as environmental contamination.
3. When there is a large amount of carbon powder from the compressor, please change the compressor oil or install a mist separator.

Lubricant

1. Valves are pre-lubricated - no further lubrication is necessary.
2. If a lubricant is used, please use Turbine Oil (ISO VG32).

Momentary Energizing

When using a Double Solenoid type with momentary energizing, make sure the energizing time more than 0.05 seconds.

Leakage Voltage

1. For the leakage current, residual leakage voltage of AC coil must be less than 20% of the rated voltage, and leakage voltage of DC coil must be less than 3% of the rake voltage when the switch is off.
2. When using a C-R element, it will increase the leakage voltage.

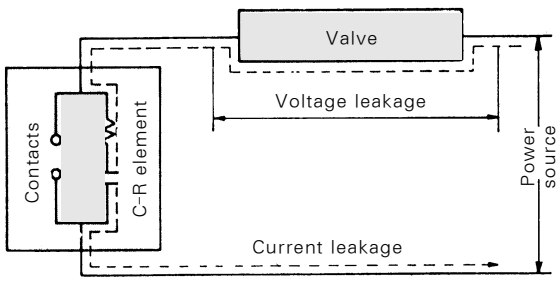

Remarks

Port	DS2000
Supply	P(SUP)
Cylinder	A(CYL.2), B(CYL.1)
Exhaust	R1(EXH2), R2(EXH1)
Symbol (Single solenoid)	P : SUP. B : CYL.1 A : CYL.2 R1 : EXH.1 R2 : EXH.2 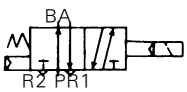

Series DS6000

Elastic Seal 5 Port Pilot Type

- COMPACT SIZE AND WEIGHT
- FLOW CAPACITY AND EFFECTIVE ORIFICE 90mm²(Cv 5.0)
- LOW POWER CONSUMPTION -1.8w(DC)
- MANY VARIATIONS AVAILABLE

Symbol

5Port/2Position

DS6140 (PT 3/4)

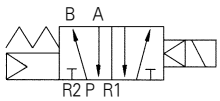

DS6240 (PT 3/4)

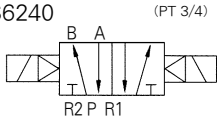

5Port/3Position

DS6340 (Closed Center)

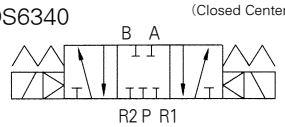

DS6440 (Exhaust Center)

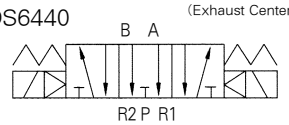

DS6540

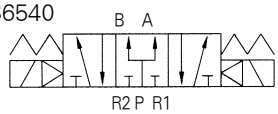

How To Order

DS 6 1 4 0 — 1 G — 06

1 2 3 4 5 6 7

1 Series
DS6000/UDS6000 Series

2 Type of Actuation
1 : 2 Position Single
2 : 2 Position Double
3 : 3 Position Closed Center
4 : 3 Position Exhaust Center
5 : 3 Position Pressure Center

3 Body Type
4 : Base mounted type

4 Body Option
0 : Standard

5 Voltage
1 : AC 110V(50/60Hz)
2 : AC 220V(50/60Hz)
3 : AC 120V(50/60Hz)
5 : DC 24V
6 : DC 12V

6 Electrical Entry/ Indicator Light and Surge Suppresson
G : Grommet
DZ : DIN Connector(With indicator Light and surge suppressor)

7 Port Size
06 : 3/4

Specifications

Model			DS6140	DS6240	DS6340	DS6440	DS6540
Fluid			Air				
Operating Pressure Range(kgf/㎠)			1.5~9.9	1~9.9	1.5~9.9		
Effective Orifice ㎟(Cv)			90(5.0)		70(3.89)		
Ambient and Fluid Temperature			Max. 50℃				
Response Time(5kgf/㎠)			40ms or less		60ms or less		
Max. Operating frequence			5c/s		3c/s		
Lubrication			Not required				
manual Override			Non-locking Push Type				
Impact/Vibration Resistance			30G/5G(8.3~2000HZ)				
Enclosure			Dust Proof				
Coil Valtage			AC 50/60HZ 110V, 120V, 220V, 240V, DC12V, 24V				
Allowable Voltage			-15%~+10% of Rated Valtage				
Coil Insulation			Class B or equivalent(130℃)				
Apparent Power	AC	Lnrush	5.6VA(50HZ), 5.0VA(60HZ)				
		Holding	4.5VA(50HZ), 3.8VA(60HZ)				
Power Consumption	DC		1.8W/2W(With LED)				
Weight(gf)			1,170	1,200	1,220	1,220	1,220
Surge suppressor circuit			AC, DC : Varistor				
Indicator Light			LED				

Construction/Parts List

Single Solenoid

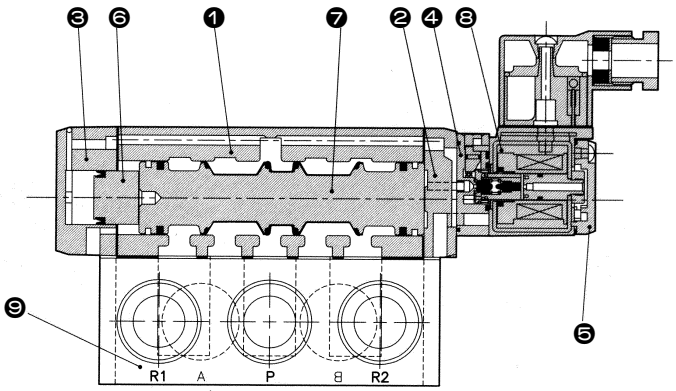

Main Parts

No.	Description	Material
❶	Body	Al Die Casting
❷	Adapter Plate	Al Die Casting
❸	End Cover	Al Die Casting
❹	Pilot Body	Polyacetal
❺	Pilot Cover	Polyacetal
❻	Piston	Polyacetal
❼	Spool	AL · NBR
❽	Coil Ass'y	-
❾	Base	Al Die Casting

Double Solenoid

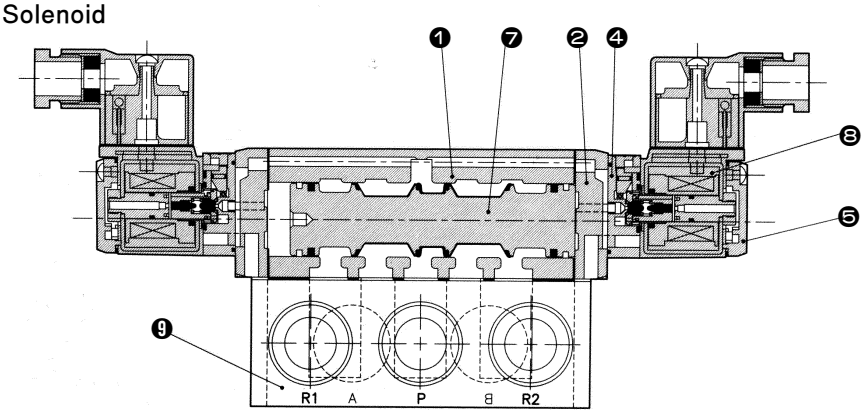

2 Position Single Solenoid

(mm)

Grommet(G)/DS 6140-○G

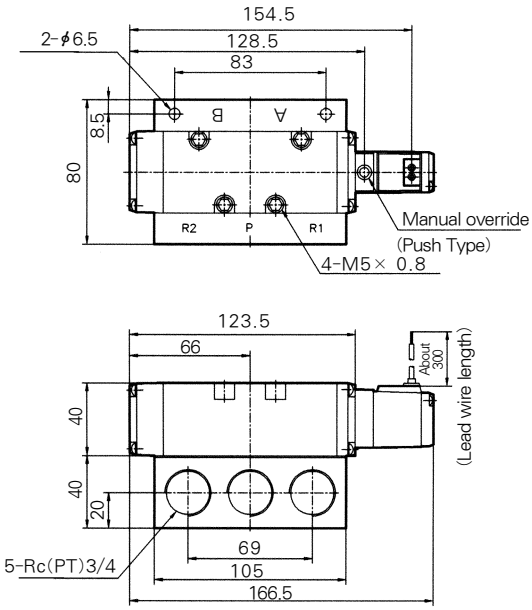

DIN Connector Type (D, DZ) DS6140-○ D
DZ

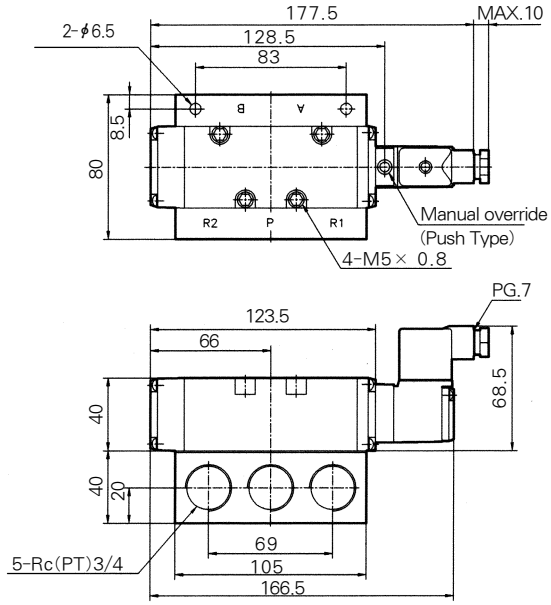

2 Position Double Solenoid

(mm)

Grommet(G)/DS 6240 - ○G

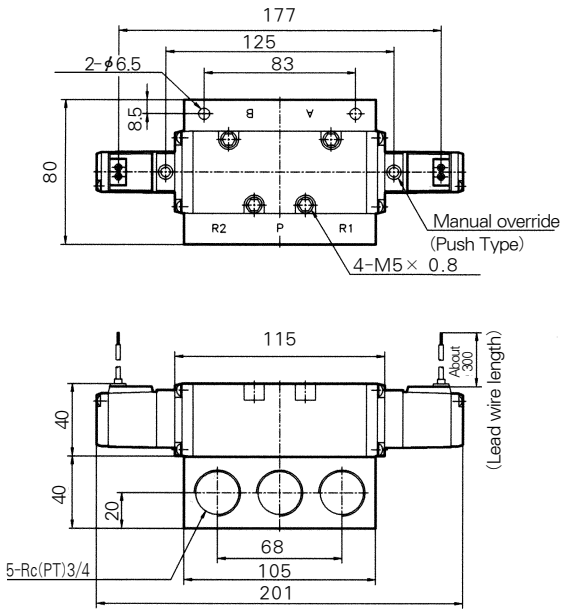

DIN Connector Type (D, DZ) DS6240-○ D
DZ

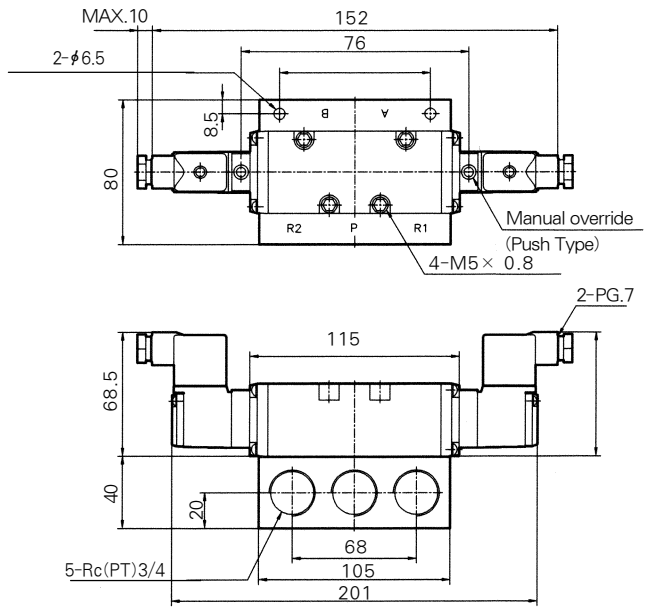

3 Position Closed Center · Exhaust Center · Pressure Center

(mm)

Grommet(G)

DS 6300 - ○G
4
5

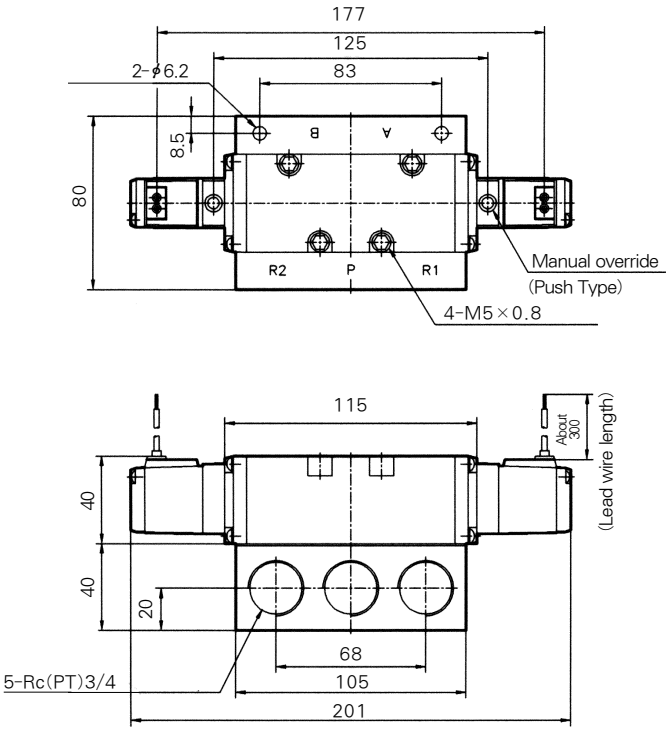

DIN Connector Type(D, DZ)

DS 6300 - ○ D
4 DZ
5

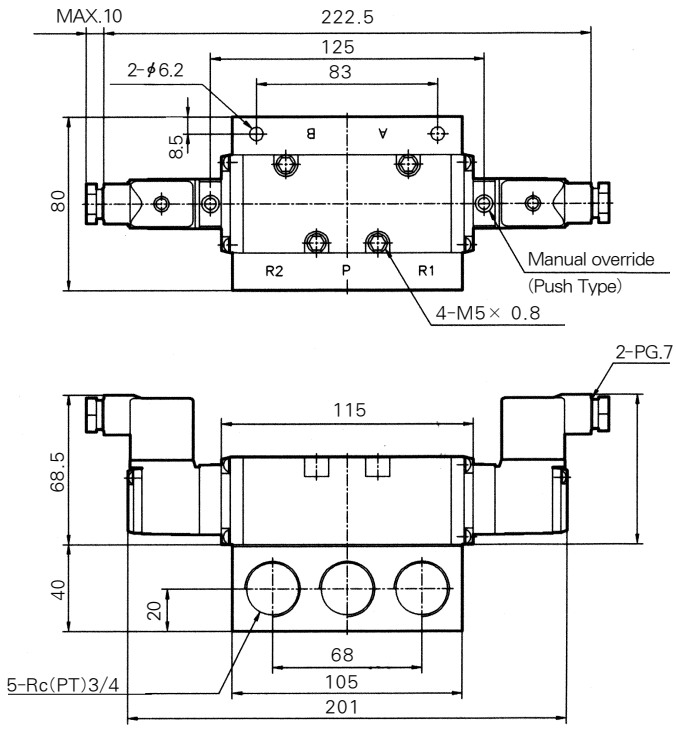

Precautions

Use as a 3 Port Valve

Plugging one of the Cylinder Ports (A or B) enables use as a 3 Port Valve. It should not be used in special applications such as a Non-leakage Valve. Make sure the Exhaust port is open if used as a 3 Port Valve.

Plug		A Port (CYL.1 Port)	B Port (CYL.2 Port)
Function		N.C	N.O
Sole-noid	Single	(X)Plug 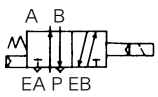	(X)Plug 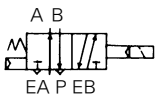
	Double	(X)Plug 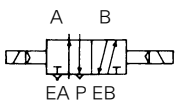	(X)Plug 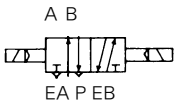

Mounting

1. Make sure that Chips, Cutting Oil, Dust, etc. are cleaned up before mounting.
2. When screwing the pipe or fitting into a port, ensure that Chips or Sealing material will not get in.
3. A Filter has already been installed to the Pilot Exhaust(P.E.) Port, so if a Silencer is to be added, first remove the Filter.
4. Clamp torque of piping.

Thread	Appropriate Clamping Torque kgf · cm(N · m)
1/8	70~90(7~9)
1/4	120~140(12~14)

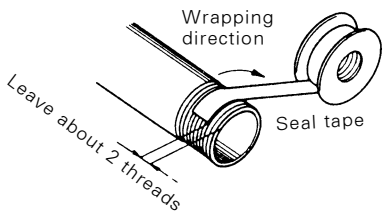

Use at Low Temperature

Available for use under -10℃, however care should be taken to protect against freezing moisture.

Quality Of Fluid

1. Filtration to 5 Microns is sufficient.
2. Large quantity of drainage causes incorrect operation of pneumatic products as well as environmental contamination.
3. When there is a large amount of carbon powder from the compressor, please change the compressor oil or install a mist separator.

Lubricant

1. Valves are pre-lubricated - no further lubrication is necessary.
2. If a lubricant is used, please use Turbine Oil (ISO VG32).

Momentary Energizing

When using a Double Solenoid type with momentary energizing, make sure the energizing time more than 0.05 seconds.

Leakage Voltage

1. For the leakage current, residual leakage voltage of AC coil must be less than 20% of the rated voltage, and leakage voltage of DC coil must be less than 3% of the rake voltage when the switch is off.
2. When using a C-R element, it will increase the leakage voltage.

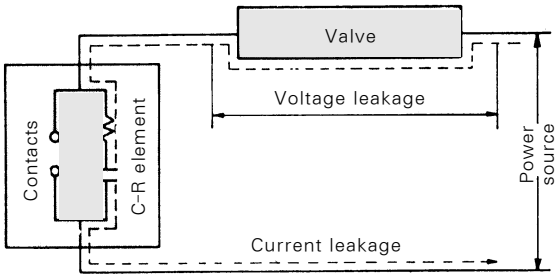

Remarks

Port	DS6000
Supply	P(SUP)
Cylinder	A(CYL.2), B(CYL.1)
Exhaust	R1(EXH2), R2(EXH1)
Symbol (Single solenoid)	P : SUP. B : CYL.1 A : CYL.2 R1 : EXH.1 R2 : EXH.2 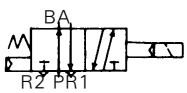

Series DX2

ISO #2 Interface Solenoid Valve

- BUILT-IN SPEED CONTROLLER (OPTIONAL)
- INDIVIDUAL PILOT EXHAUST TYPE
- EFFECTIVE ORIFICE:62mm²(3.4Cv)
- BUILT-IN LED
- SURGE SUPRESSION OPTION

Symbol

	Single Solenoid(FG-S)	Double Solenoid(FG-D)
2 Position	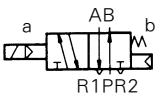	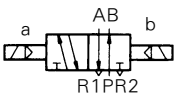

	Closed Center(FHG-D)	Exhaust Center(FJG-D)	Pressure Center(FIG-D)
3 Position	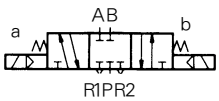		

How to Order

DX2 — FG-S — 1 N ☐ ☐ U A03

1 2 3 4 5 6 7 8

1 ISO#2 Type Valve

2 Type of Actuation
- FG-S : 2 Position Single
- FG-D : 2 Position Double
- FHG-D : 3 Position Closed Center
- FJG-D : 3 Position Exhausted Center
- FIG-D : 3 Position Pressure Center

3 Voltage
- 1 : AC100V, 50/60Hz
- 2 : AC200V, 50/60Hz
- 3 : DC24V

4 Indicator Light
- N : Indicator Light
- Z : With Indicator Light and Surge Voltage Suppressor

5 Speed Controller
- Blank : Without Speed Controller
- S : With Speed Controller

6 Cable Gasket
- Blank : ø11
- P : ø7

7 Thread
- Blank : Rc(PT)
- U : NPT

8 Port Size
- Blank : Valve Less Base
- A03 : 3/8
- A04 : 1/2

Standard Specifications

Fluid			Air
Operating Pressure Range	2 Position Single, 3 Position		21~128 PSI{0.15~0.9 MPa}
	2 Position Double		14~128 PSI{0.1~0.9 MPa}
Ambient and Fluid Temperature			Max. 122°F
Lubrication			Non-lube
Manual Override			Non-locking Push Type
Enclosure			IP 65
Voltage			AC100V, 200V(50/60Hz), DC24V
Voltage Consumption			-15%~+10% of Rated Voltage
Power Consumption	AC	Inrush	5.6VA(50Hz), 5.0VA(60Hz)
		Holding	3.4VA(50Hz), 2.3VA(60Hz)
	DC		2W
Electrical Entry			DIN Connector

※ If Provided, use turbine oil(ISO VG32)

Model

Position/ Solenoid		Type	Effective Orifice (mm^2)(Cv factor)	Max.Operating Rate(1) cycles/sec	Response Time(2)	Weight (kg)
2Position	Single	DX2-FG-S-※	3.0(1.67)	5	0.05 Less	0.53
	Double	DX2-FG-D-※	3.0(1.67)	5	0.05 Less	0.73
3Position	Closed Center	DX2-FHG-D-※	28.8(1.6)	3	0.07 Less	0.73
	Exhausted Center	DX2-FJG-D-※	28.8(1.6)	3	0.07 Less	0.73
	Pressure Center	DX2-FIG-D-※	20(1.1)	3	0.07 Less	0.73

Note (1) Minimum Operating Cycle Rate : in accordance with B8375(1/30 days)
(2) In accorance with B8375-1975, at 71.1 PSI
(3) Weight Without sub-plate(sub-plate weight : 1.50lbs)

DIN Connector(Wiring)

● **Indicator Light**

Single

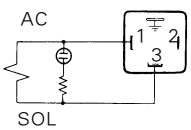

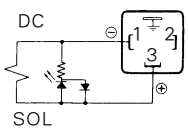

Double

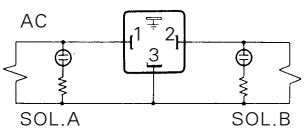

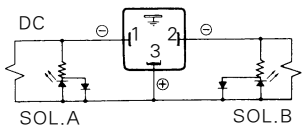

● **Indicator Light and Surge Voltage Suppressor**

Single

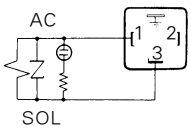

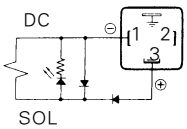

Double

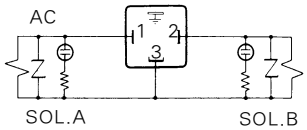

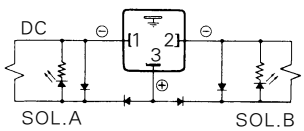

Construction

DX2-FG-S-※

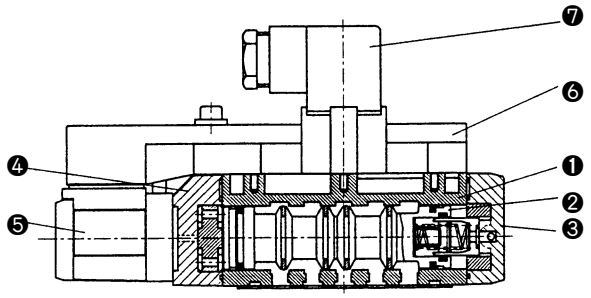

DX2-FG-D-※

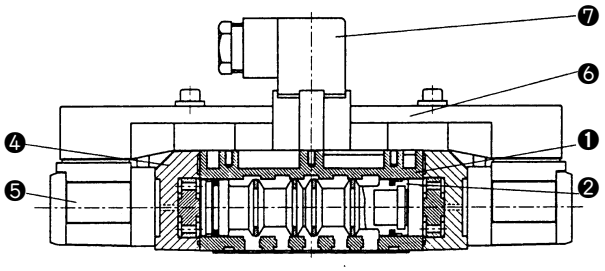

DX2-FHG-D-※

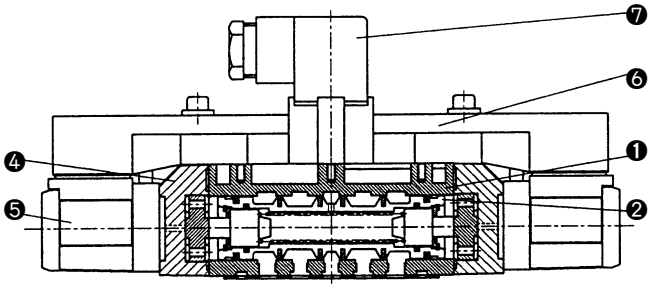

DX2-FJG-D-※

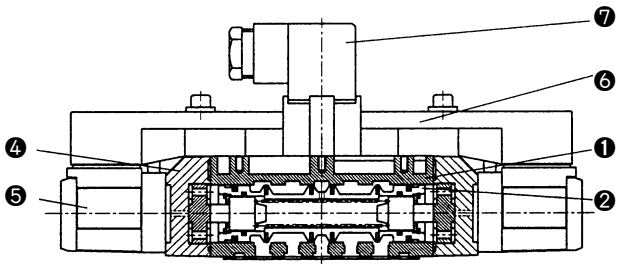

DX2-FIG-D-※

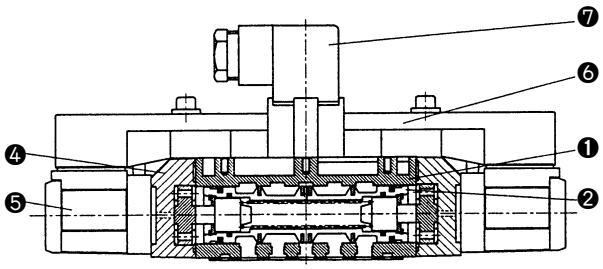

Main Parts

No.	Description	Material	Note
❶	Body	Aluminum Die Casting	
❷	Spool	Aluminum+NBR	
❸	End Cover	Aluminum Die Casting	Black Paint
❹	Adapter Plate	Aluminum Die Casting	Black Paint
❺	Pilot Valve Ass'y	–	
❻	Lamp Case	Resin	
❼	Connector	Resin	

Dimensions

(mm)

DX2-FG-S

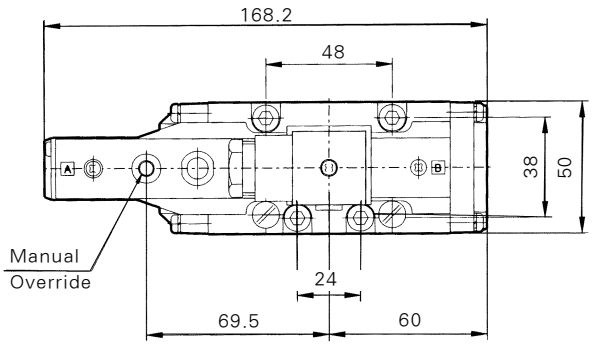

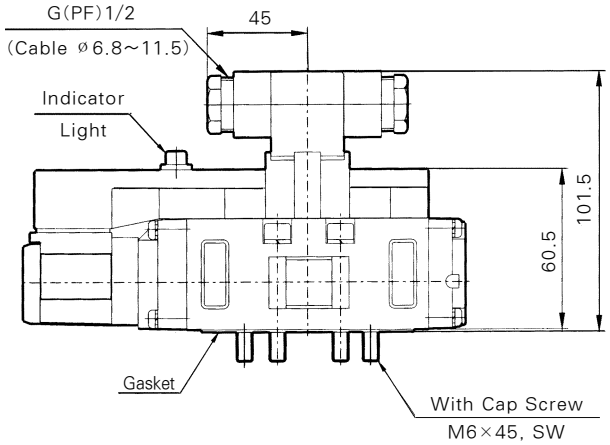

DX2-FG-D
DX2-FHG-D
DX2-FJG-D
DX2-FIG-D

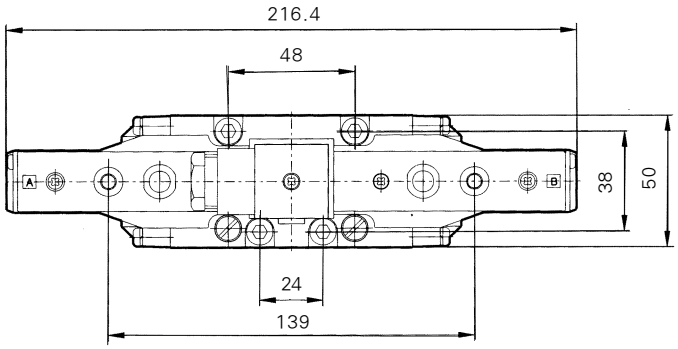

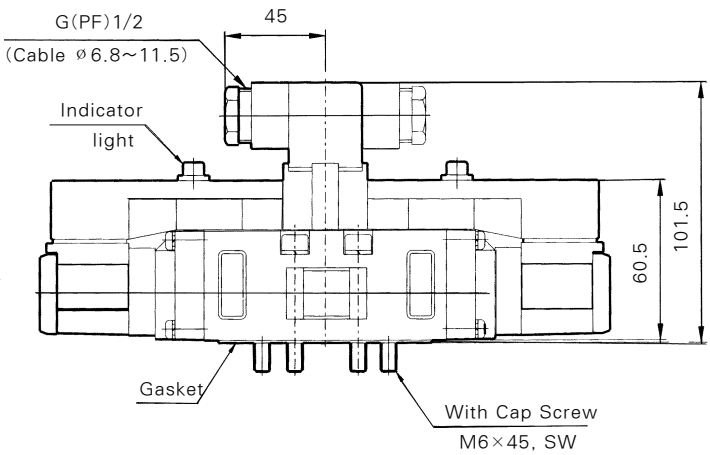

Sub-Base Series(DXM2)

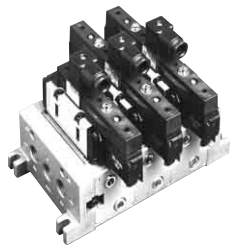

Specifications

Applicable Solenoid Valve	ISO Size ②
Sub-Plate Size	ISO Size ②
Porting	Side : 3/8, 1/2
Weight (kgs)	1.5

How to Order

Sub Base

DXS2 — A03
1

1 Porting
A03 : 3/8
A04 : 1/2

Manifold

DXM2 ☐ — ☐
1 2

1 Porting A, B
03R : 3/8
04R : 1/2

2 Porting P, R1, R2
04B : 1/2

Sub-Base Dimensions

(mm)

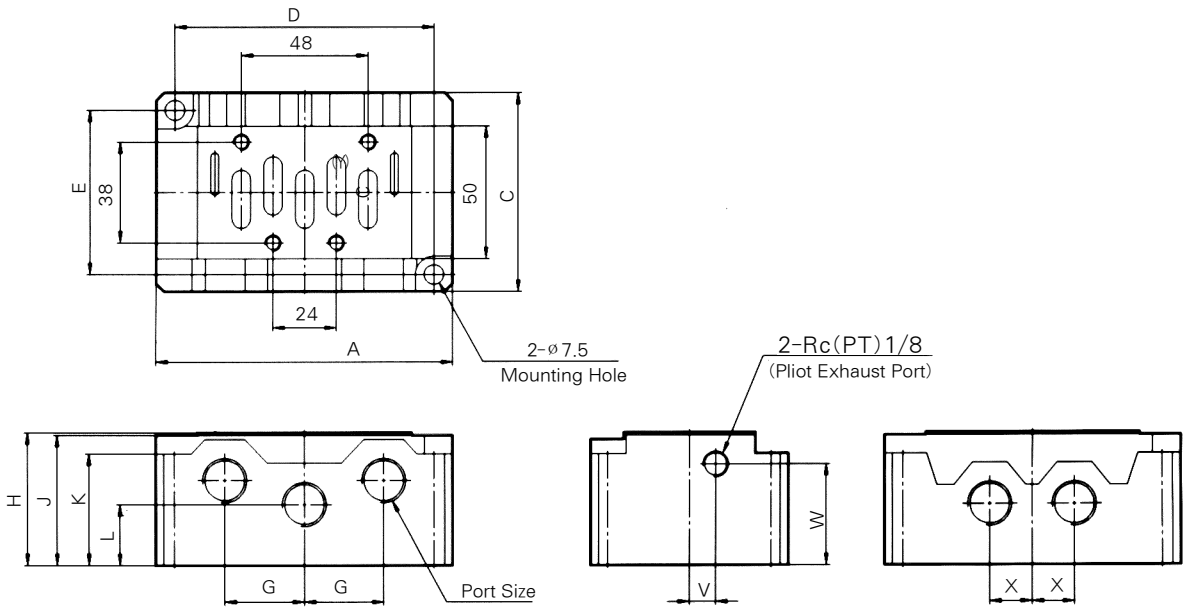

(mm)

Model	Port Size	A	C	D	E	F	G	H	K	L	V	W	X	Y
DXM2-2 A03, A04	Rc(PT) 3/8 1/2	112	75	98	62	4-M6 Depth12	30	50	32	23	10	38	16	23

Manifold/Dimensions

(mm)

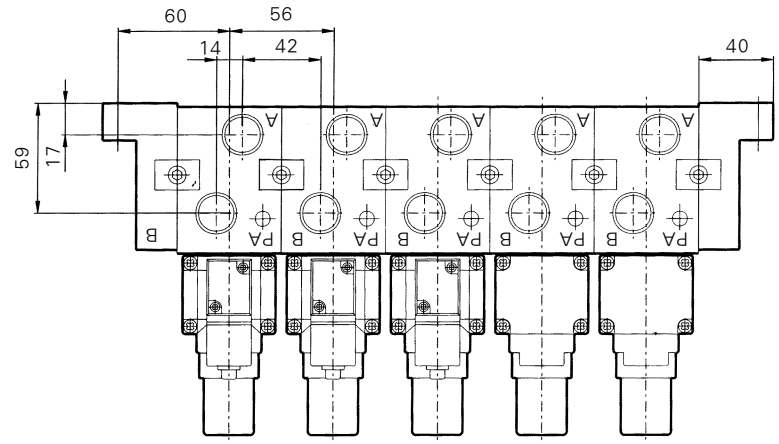

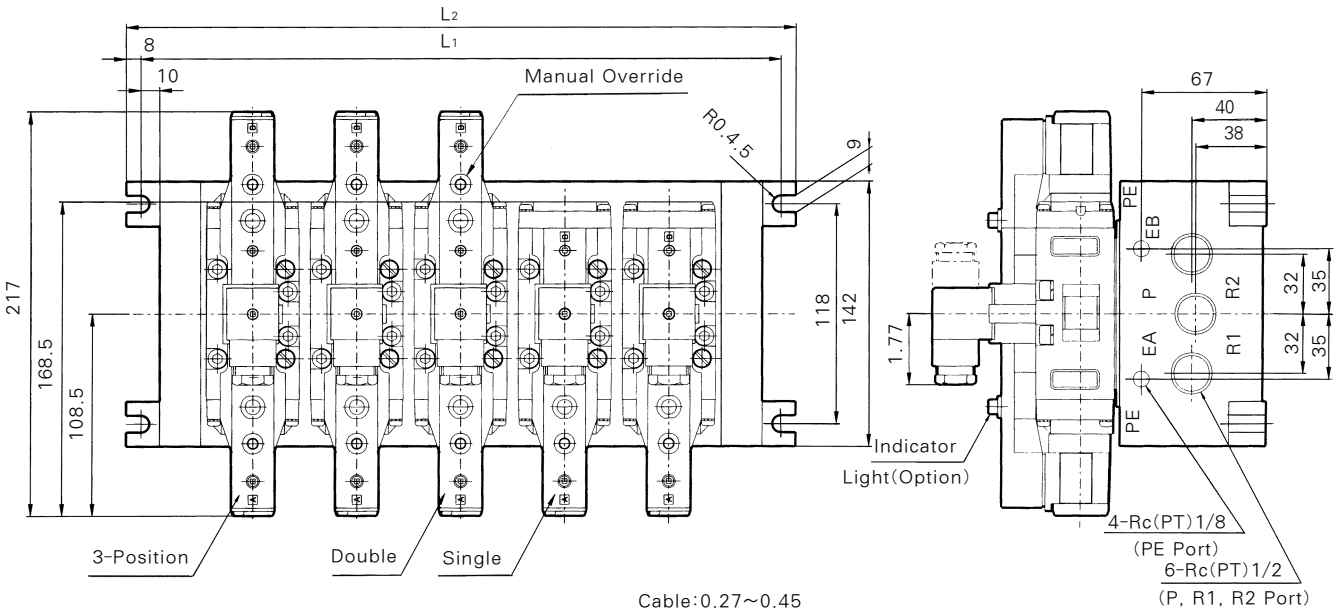

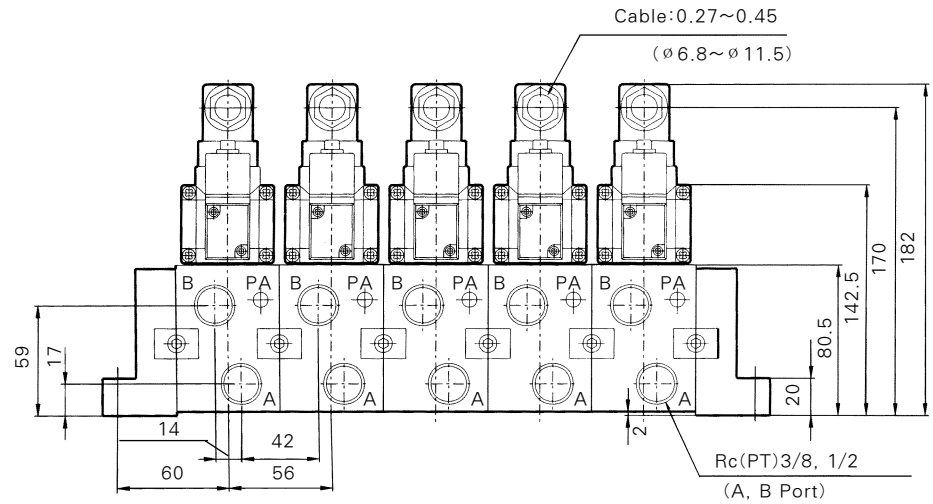

(mm)

Size	Symbol \ Stations	1	2	3	4	5	6	7	8	9	10	Equation(mm)
Rc(PT)1/2	L_1	120	176	232	288	344	400	456	512	568	624	n:Stations $L_1=56n+64$ $L_2=56n+80$
	L_2	136	192	248	304	360	416	472	528	584	640	

ISO#2 Interface Regulator

Series DX2R

- SANDWICH REGULATOR FOR DX2 VALVE (ISO#2)
- LIGHT WEIGHT (760g)&COMPACT DESIGN (HEIGHT 53mm)
- HANDLE POSITION IS THE SAME FOR ALL OPTIONS
- SINGLE SOLENOID VALVE HAS HANDLE AND GAUGE ON THE SAME SIDE (OPTIONAL)

How to Order

DX2R — P — C

1 2 3

1 Sandwich Regulator (ISO #2)

2 Regulation Port
- P : P port regulation
- A : A port regulation
- B : B port regulation

3 Gauge Type
- Blank : Radial Type Gauge
- C : Cylinderical Type Gauge(Single Only)

Symbol

Model	Regulation Port	Pressure Gauge Port Size	Pressure Governor	Symbol
DX2R-P	P port regulation	Rc (PT) 1/8	Relieving Type	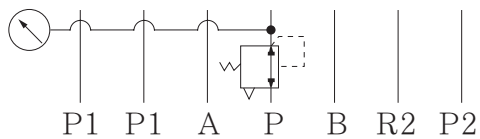
DX2R-A	A port regulation			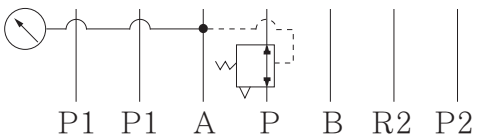
DX2R-B	B port regulation			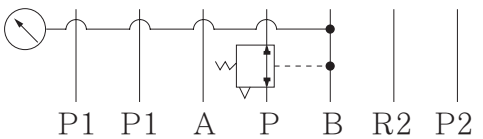

Series DX2R /Specifications

Proof Pressure		15.3kgf/cm² (1.5 MPa)		
Max. Operating Pressure		10.2kgf/cm² (1.0 MPa)		
Set Pressure Range		1.0~8.5kgf/cm² (0.1~0.83 MPa)		
Pressure Gauge Port Size		Rc(PT) 1/8		
Ambient and Fluid Temperature		5~60℃		
Pressure Governor		Relieving Type		
		P Pressure Reducing	A Pressure Reducing	B Pressure Reducing
Air Supply Side Eff. Area(mm²) (Cv)	P → A	27 mm² (1.5)	30 mm² (1.7)	27 mm² (1.5)
	P → A	27 mm² (1.5)	30 mm² (1.5)	27 mm² (1.5)
Air Exhaust Side Eff. Area(mm²) (Cv)	A → R1	60 mm² (3.3)		
	B → R2	36 mm² (2.0)		

Construction/Component

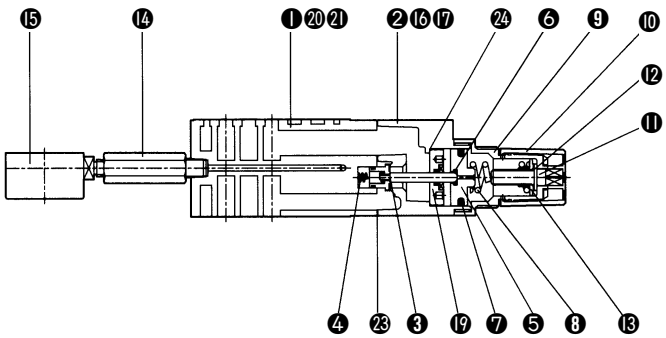

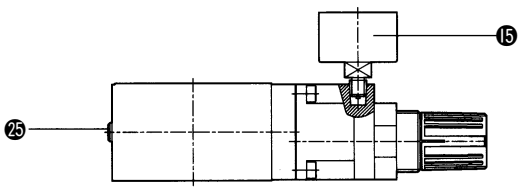

Cylinderical Gauge Type

Component Ports

NO	Description	Material	Note
❶	Body	Al Die Casting	
❷	Chamber	Al Die Casting	
❸	Valve Ass' y	Al Die Casting	
❹	Valve Spring		
❺	Piston		
❻	Piston Gasket		
❼	Piston Packing	NBR	
❽	Adjusting Spring	NBR	
❾	Bonnet	SWP	
❿	Handle	Poly Amide	
⓫	Adjusting Bolt	Poly Acetal	
⓬	Lining		
⓭	Adjusting Nut		
⓮	Nipple		
⓯	Pressure Gauge		
⓰	Steel Ball		
⓱	Bolt		
⓲	Mounting Bolt		
⓳	Chamber Plate Ass' y		
⓴	Symbol Plate	TETRON	
㉑	Name Plate	TETRON	
㉒	Manifold Gasket	NBR	
㉓	Chamber Gasket	NBR	
㉔	Chamber Plate Gasket	NBR	
㉕	Pressure Plug		

Interface Regulator/Dimensions

(mm)

DX2R-P (A,B)

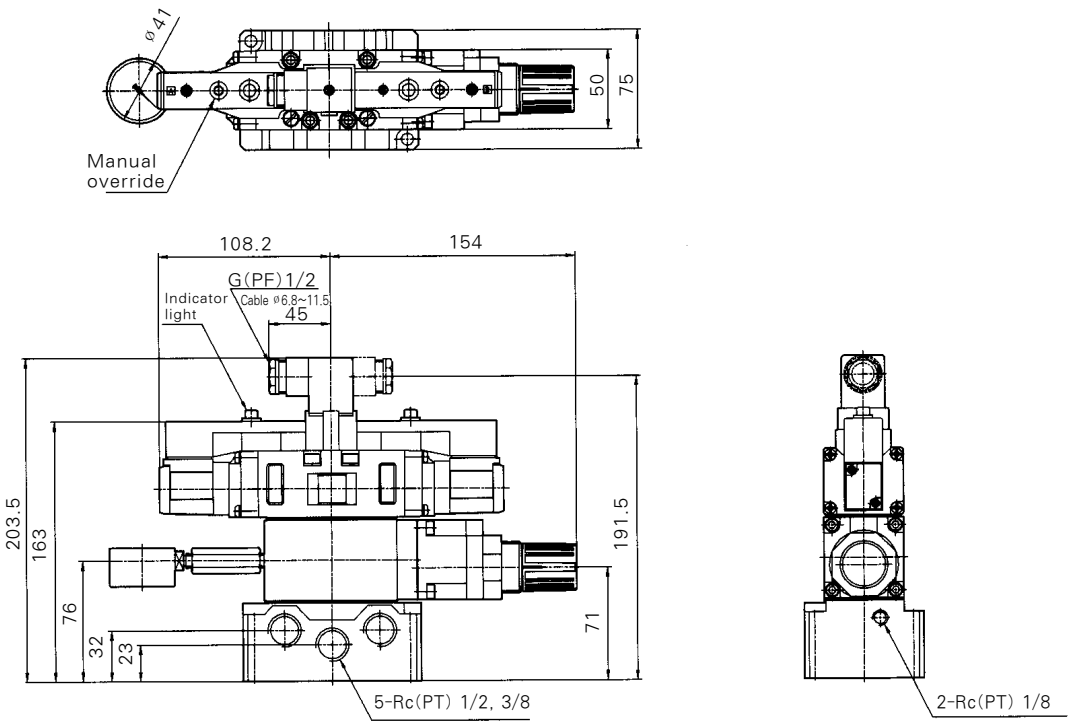

DX2R-P (A,B)-C
〈Only Single Type Sol' Valve〉

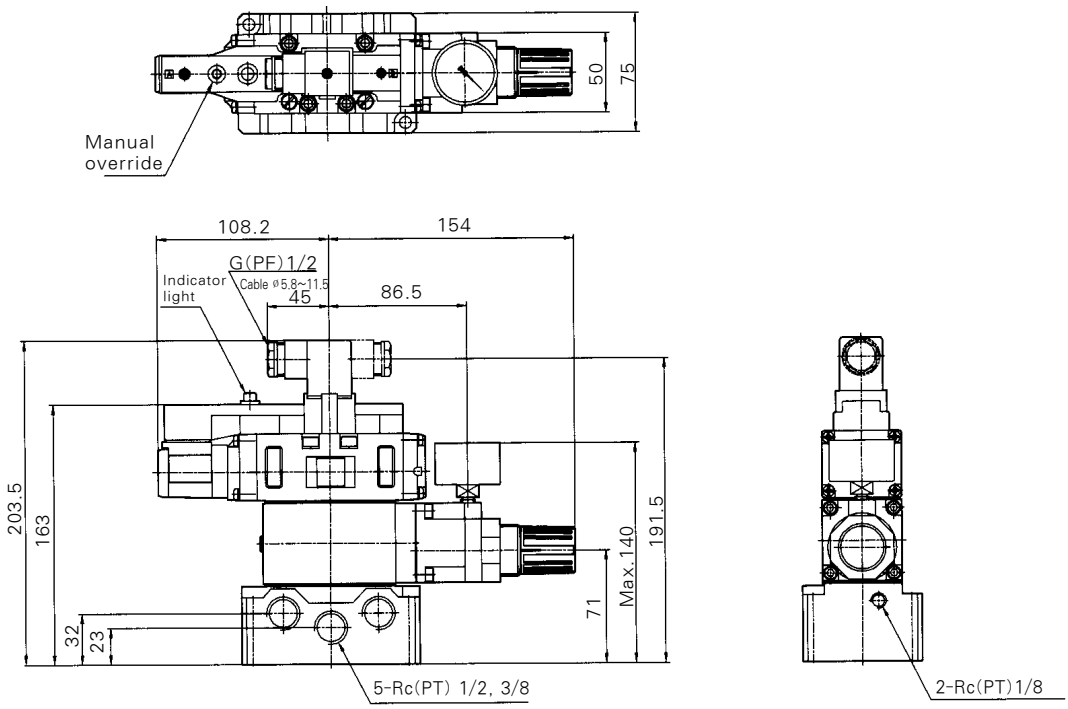

ManifoldTVV72/Dimensions

(mm)

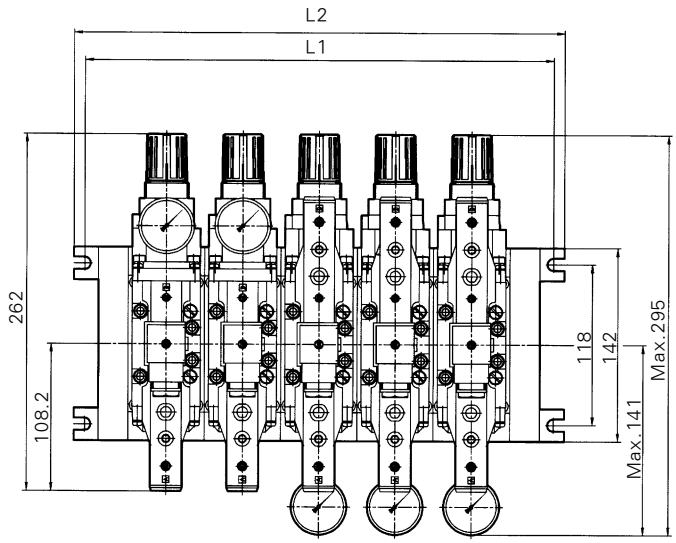

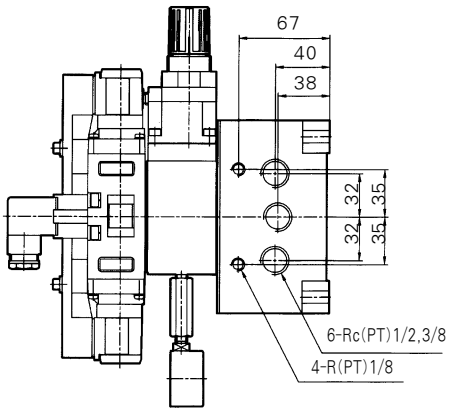

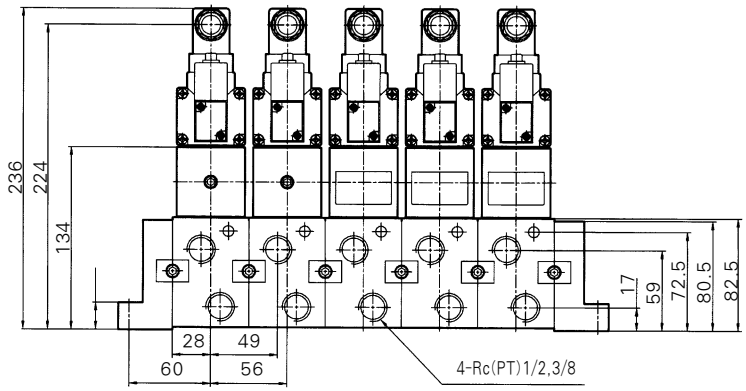

Size	Symbol \ Stations	1	2	3	4	5	6	7	8	9	10	Equation(mm)
Rc(PT)1/2	L_1	120	176	232	288	344	400	456	512	568	624	n:Stations $L_1=56n+64$ $L_2=56n+80$
	L_2	136	192	248	304	360	416	472	528	584	640	

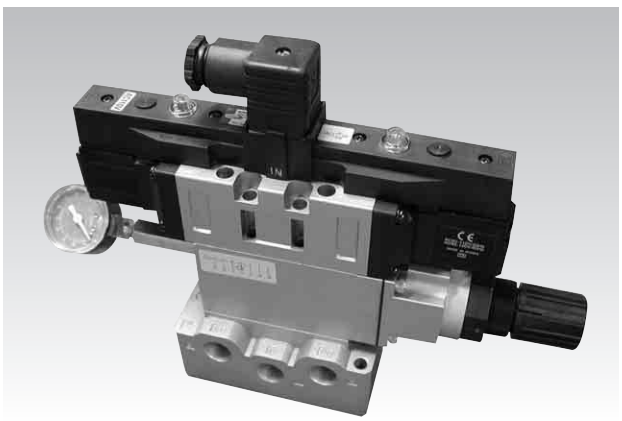

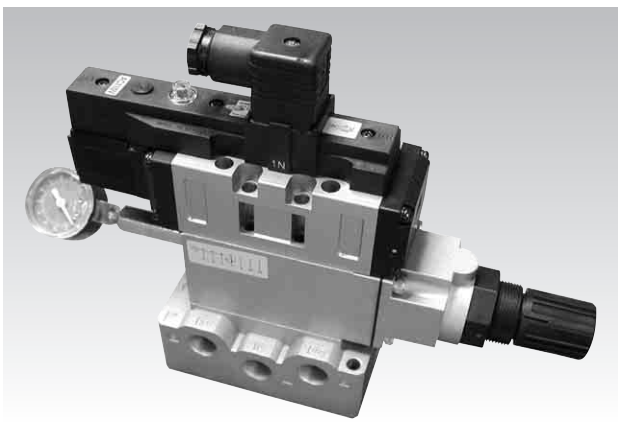

Series DH

Hand Valve

- PORTING OF Rc(PT) 1/4, 3/8 AND 1/2
- ALUMINUM DIE CASTING DESIGN FOR HEAVY APPLICATIONS
- DETENTED CENTER POSITION

Symbol

Closed Center

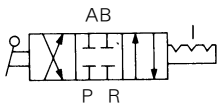

How to Order

DH **2** **0** **0** — **02**

1 2 3 4 5

1 Series DH

2 Body Size (Basic Size)
- 2: Cv 0.4(1/4 Rc(PT) Only)
- 3: Cv 1.1(3/8 Rc(PT) Only)
- 4: Cv 3.1(1/2 Rc(PT) Only)

3 Piping & Mounting Position
- 0 : Piping-Side Mounting-Body

4 Position Symbol
- 0 : 3 Position Closed Center
- 2 : 2 Position

5 Port Size
- 02 : Rc(PT) 1/4
- 03 : Rc(PT) 3/8
- 04 : Rc(PT) 1/2

Model

Series	Port Size Rc(PT)	Number of Positions	Piping	Model Body Ported	Effective Orifice mm²(Cv factor)	Weight kgf
DH2	1/4	3(Closed Center) 2(Position)	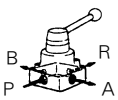	DH200-02 DH202-02	7.5(0.4)	0.55
DH3	3/8	3(Closed Center) 2(Position)		DH300-03 DH302-03	20(1.1)	0.9
DH4	1/2	3(Closed Center) 2(Position)		DH400-04 DH402-04	55(3.1)	1.6

Standard Specifications

Fluid	Air
Proof Pressure	15kgf/㎠ {1.5MPa}
Max. Operating Pressure	9.9kgf/㎠ {990kPa}
Ambient and Operating Fluid Temperature	5~60℃
Operating Angle	90°

Flow Characteristics

DH200

Effective area S=7.5mm²

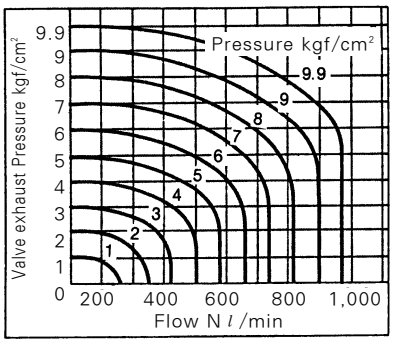

DH300

Effective area S=20mm²

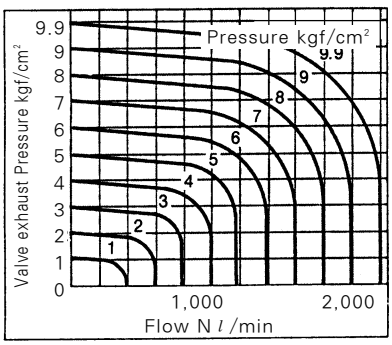

DH400

Effective area S=55mm²

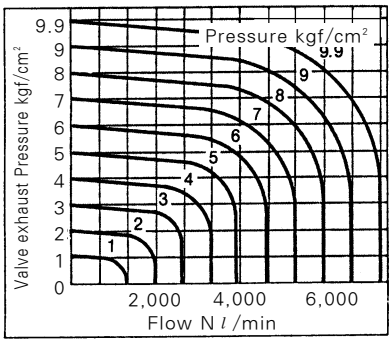

Dimensions

(mm)

DH200-02/Side Piping

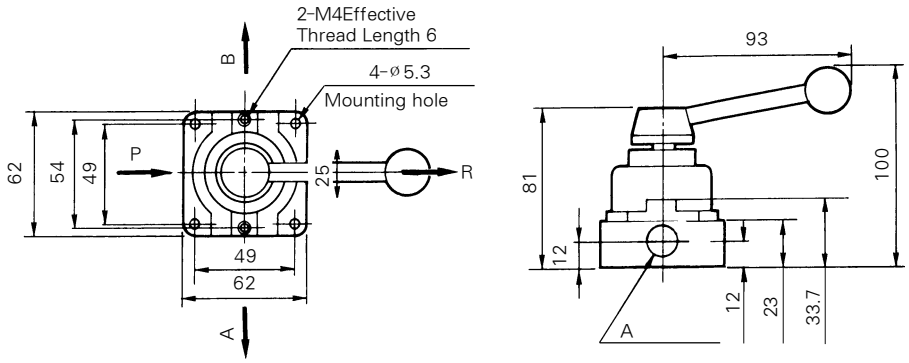

DH300-03/Side Piping

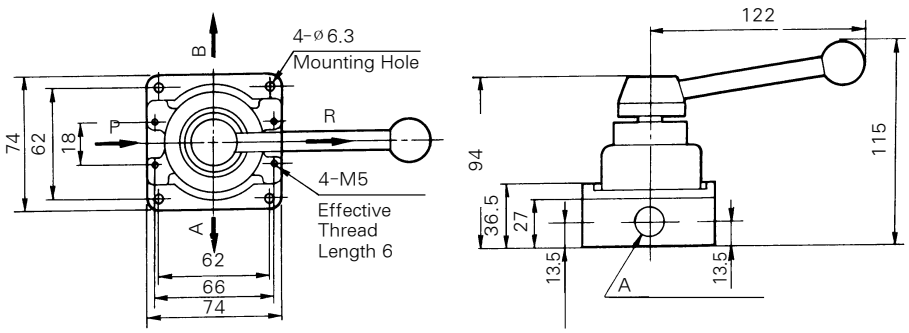

DH400-04/Side Piping

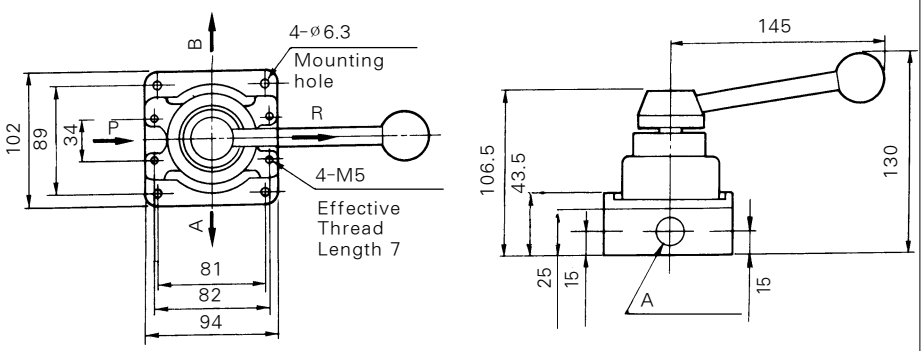

3 · 5 Port Mechanical Valves

Series DM

- VARIOUS ACTUATORS AVAILABLE
- EASY TO INTERCHANGE ACTUATOR ASSEMBLIES

Specifications

Body Type	DM230	DM330	DM450	DM550
Fluid	Air			
Operating Pressure Range	0~7kgf/cm²		1.5~7kgf/cm²	
Effective Orifice mm²(Cv)	11.0(0.6)	19.0(1.0)	14.0(0.7)	19.0(1.0)
Lubrication	Not Required			
Port Size	Rc(PT)1/8	Rc(PT)1/4	Rc(PT)1/8	Rc(PT)1/4
Weight(gf)	88	125	163	191
Actuator	Basic Type, Roller Plunger, Roller, Push Button(Mushroom), Push Button(Flush),Selector			
Symbol	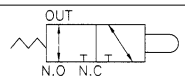		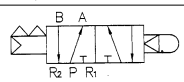	

How To Order

DM 2 30 – ○ – 01 B – R

1 2 3 4 5 6 7

1 Mechanical Valve

2 Body Type
- 2 : B Type
- 3 : C Type
- 4 : D Type
- 5 : E Type

3 Type of Actuation
- 30 : 2 Position 3 Port N.O/N.C.
- 50 : 2 Position 5 Port

4 Mounting
- Blank : Standard
- ※B : Bracket
- ※Bracket Part No
  - DM450 Series : DM-4B
  - DM550 Series : DM-5B

5 Port Size
- 01 : 1/8
- 02 : 1/4

6 Actuator
- B : Basic Type
- R : Roller Plunger
- RB : Roller
- E : Push Button(Mushroom)
- P : Push Button(Flush)
- S : Selector

7 Operater Color
- R : Red
- G : Green
- B : Black

B TYPE	C TYPE	D TYPE	E TYPE
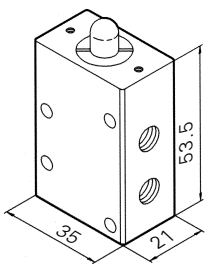	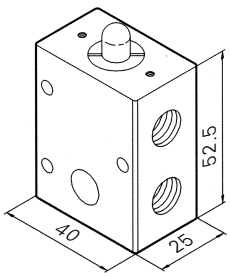	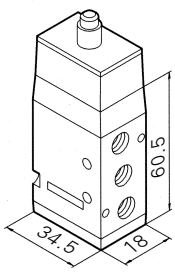	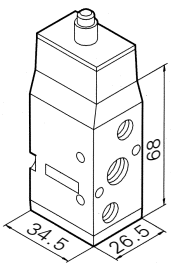

DM230/Construction/Parts List

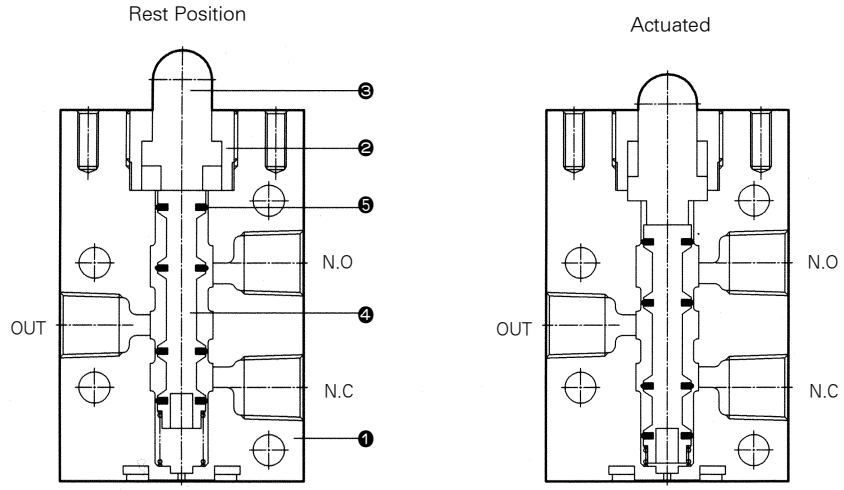

No.	Description	Material
❶	Body	Al
❷	Housing	C3604
❸	Button	POM
❹	Spool	A2011
❺	Spool Packing	NBR

DM230-01B (Basic Type)

Symbol

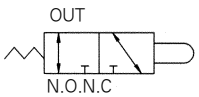

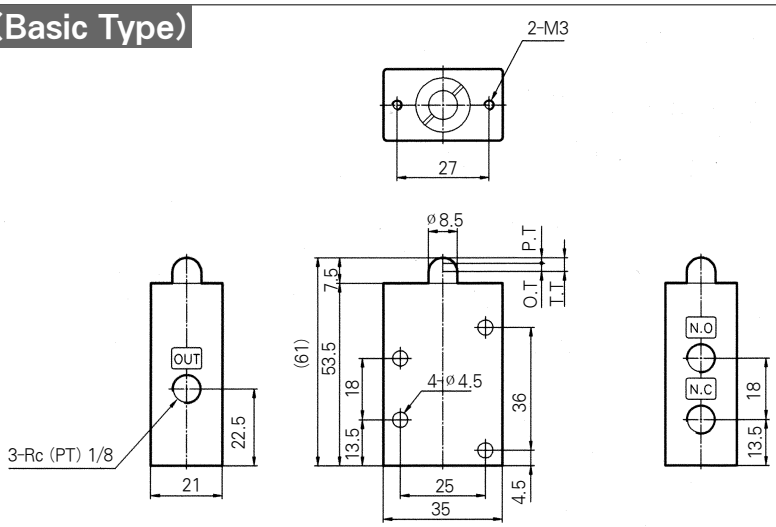

F.O.F	2.5kgf
P.T	1.5mm
O.T	2mm
T.T	3.5mm

DM230-01R (Roller Plunger)

Symbol

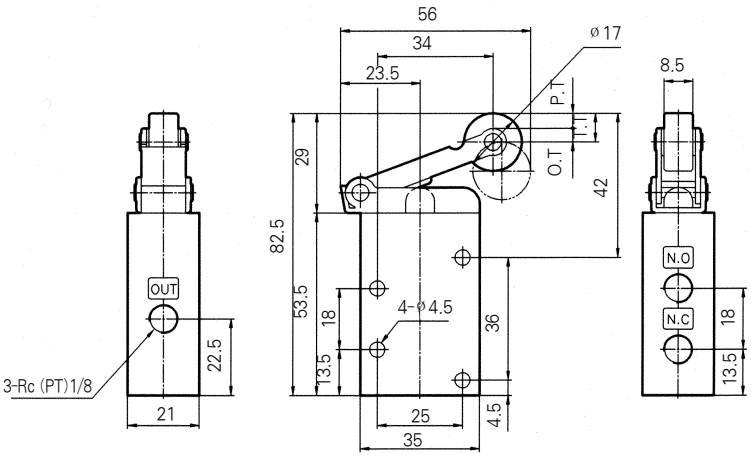

F.O.F	1.2kgf
P.T	4mm
O.T	4.5mm
T.T	8.5mm

DM230-01E(Push Button/Mushroom)

Symbol

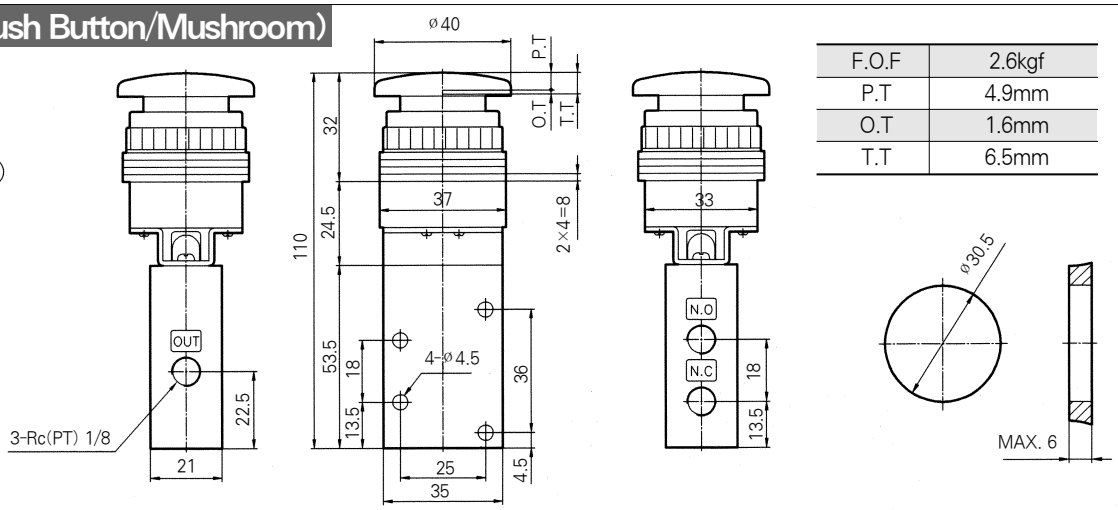

F.O.F	2.6kgf
P.T	4.9mm
O.T	1.6mm
T.T	6.5mm

DM230-01P (Push Button/Flush)

Symbol

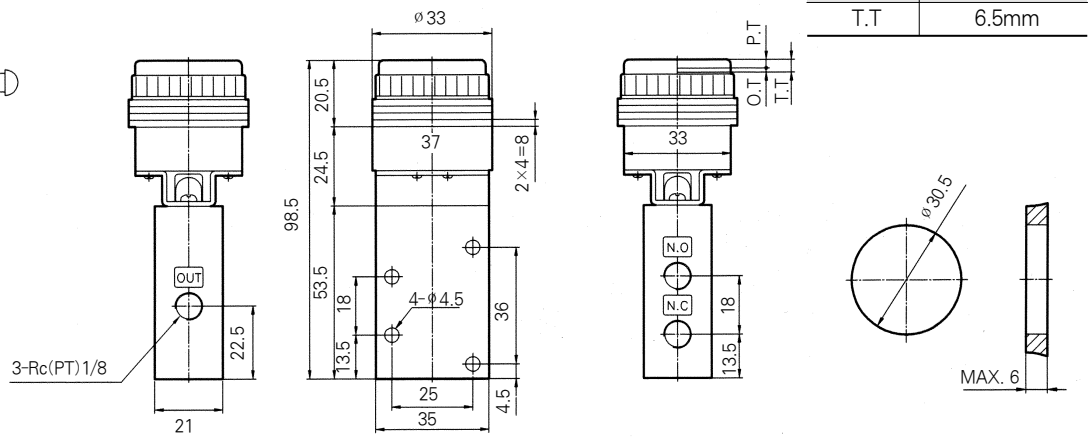

F.O.F	2.6kgf
P.T	4.9mm
O.T	1.6mm
T.T	6.5mm

DM230-01S (Selector Type)

Symbol

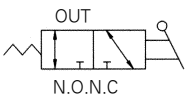

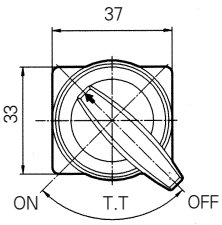

F.O.F	1.0 kgf
T.T	90°

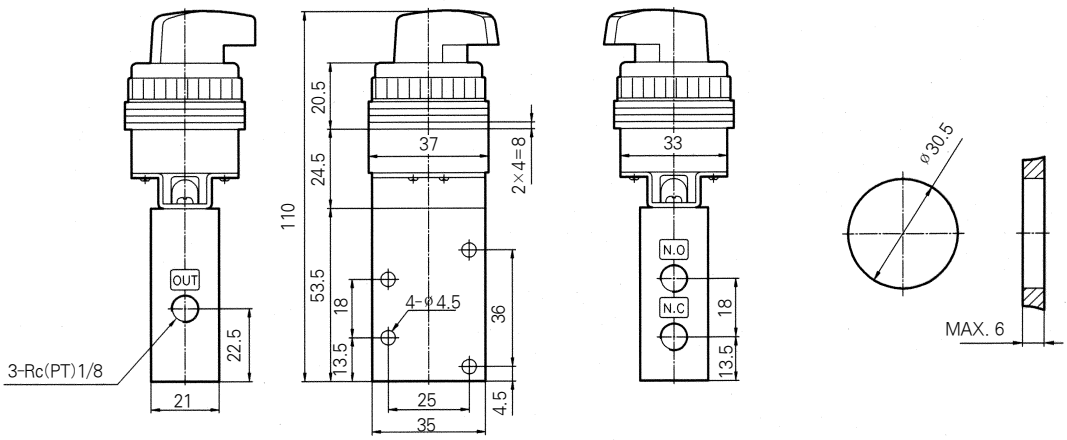

DM330/Construction/Parts List

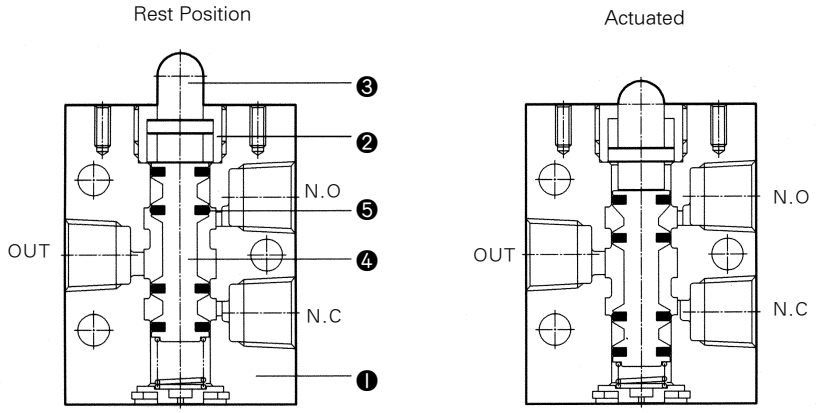

No.	Description	Material
❶	Body	AL
❷	Housing	C3604
❸	Button	POM
❹	Spool	A2011
❺	Spool Packing	NBR

DM330-02B (Basic Type)

Symbol

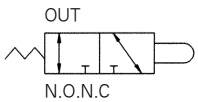

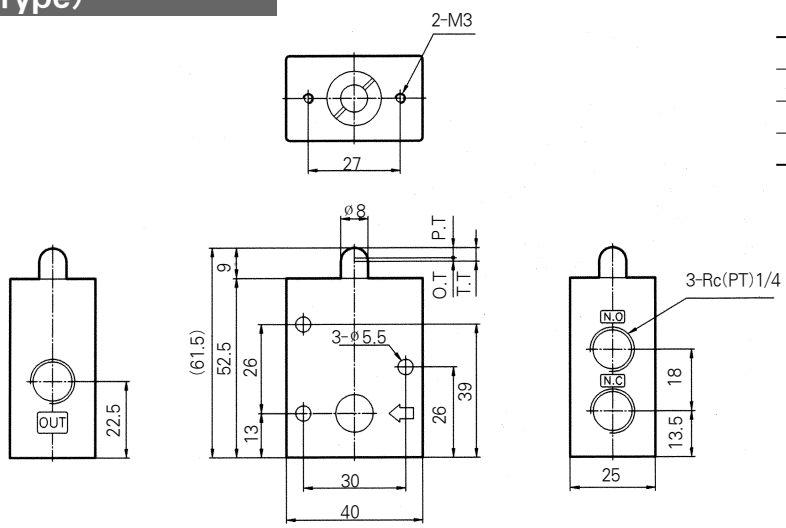

F.O.F	2.2kgf
P.T	3mm
O.T	2mm
T.T	5mm

DM330-02R (Roller Plunger)

Symbol

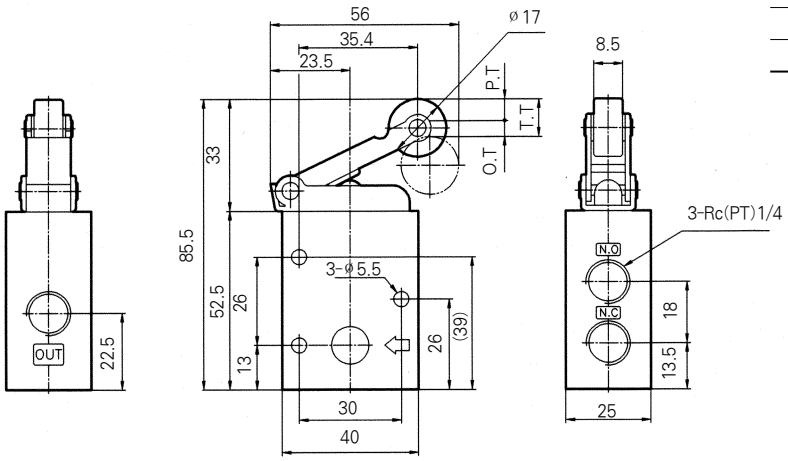

F.O.F	1.2kgf
P.T	6.5mm
O.T	4.5mm
T.T	11mm

DM330-02E (Push Button/Mushroom)

Symbol

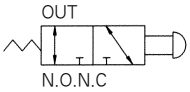

F.O.F	3.0kgf
P.T	4.9mm
O.T	1.6mm
T.T	6.5mm

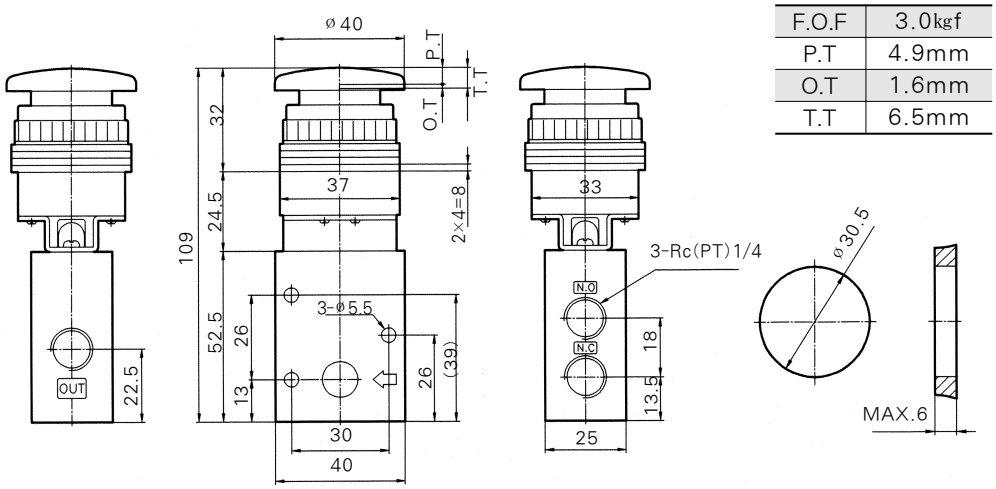

DM-330-02P (Push Button/Flush)

Symbol

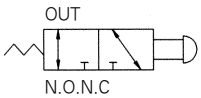

F.O.F	3.0kgf
P.T	4.9mm
O.T	1.6mm
T.T	6.5mm

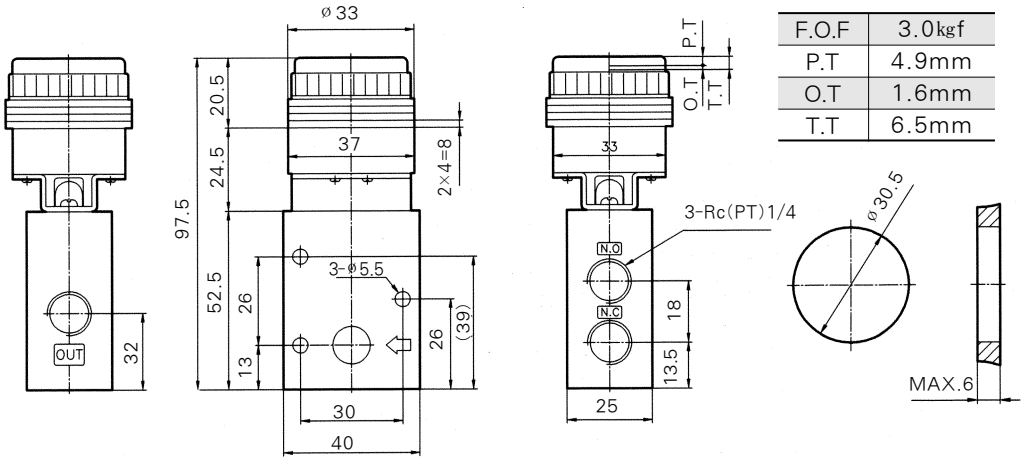

DM330-02S (Selector Type)

Symbol

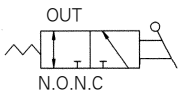

F.O.F	1.0kgf
T.T	90°

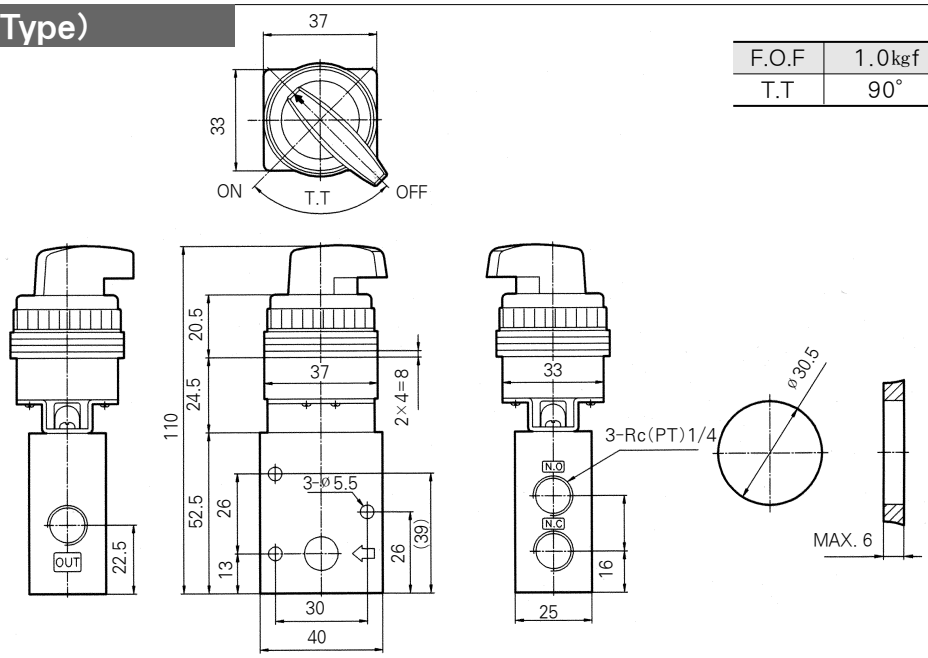

DM450/Construction/Parts List

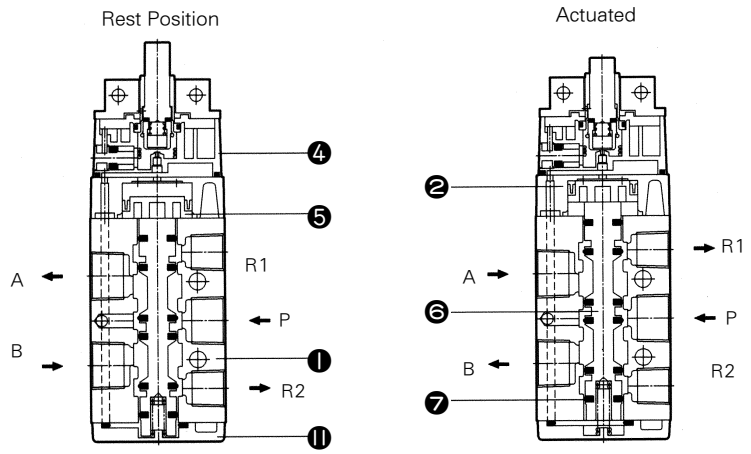

No.	Description	Material
❶	Body	Al
❷	Semi Pilot	ZADC
❸	Cap	ZnDC
❹	Pilot	ZnDC
❺	Piston	PBT
❻	Spool	A2011
❼	Spool Packing	NBR

DM450-01B (Basic Type)

F.O.F	1.5kgf
P.T	1mm
O.T	1.5mm
T.T	2.5mm

Symbol

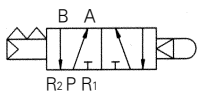

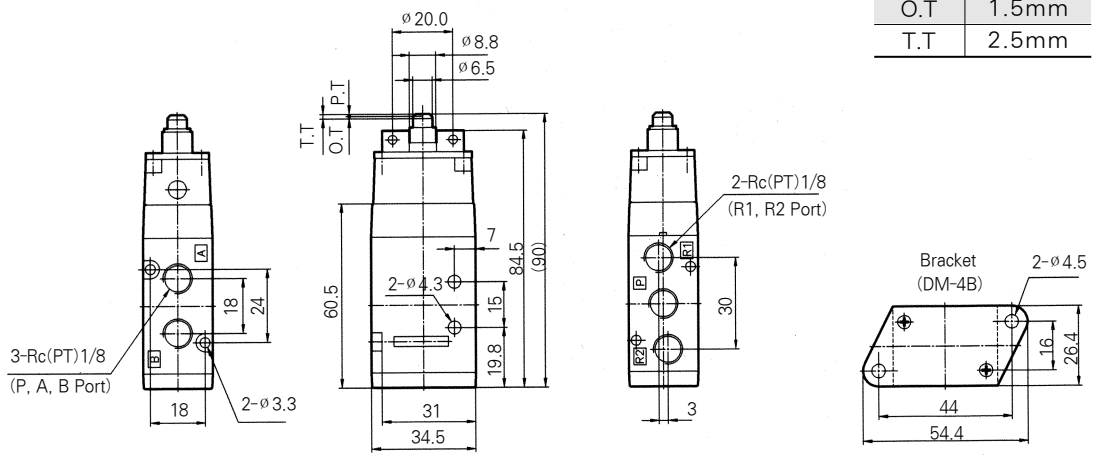

DM450-01R (Roller Plunger)

F.O.F	1.0kgf
P.T	1.5mm
O.T	1.5mm
T.T	3mm

Symbol

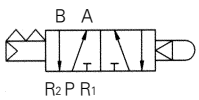

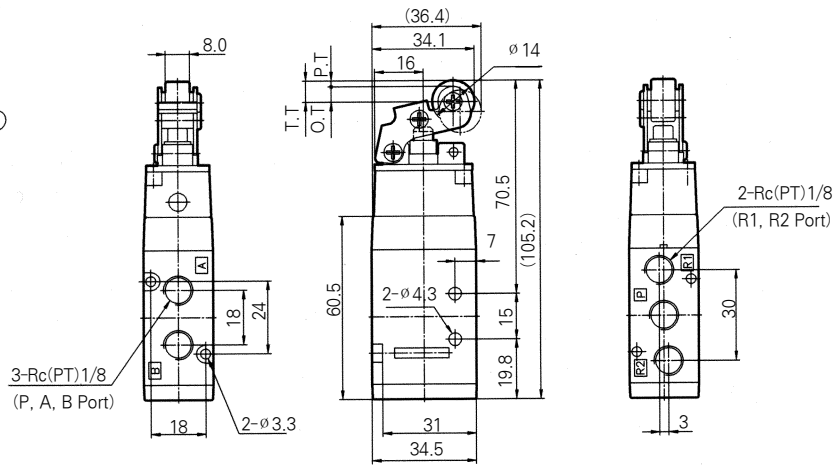

DM450-01E (Push Button/Mushroom)

F.O.F	1.5kgf
P.T	4.5mm
O.T	1.5mm
T.T	6mm

Symbol

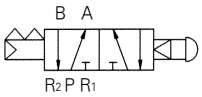

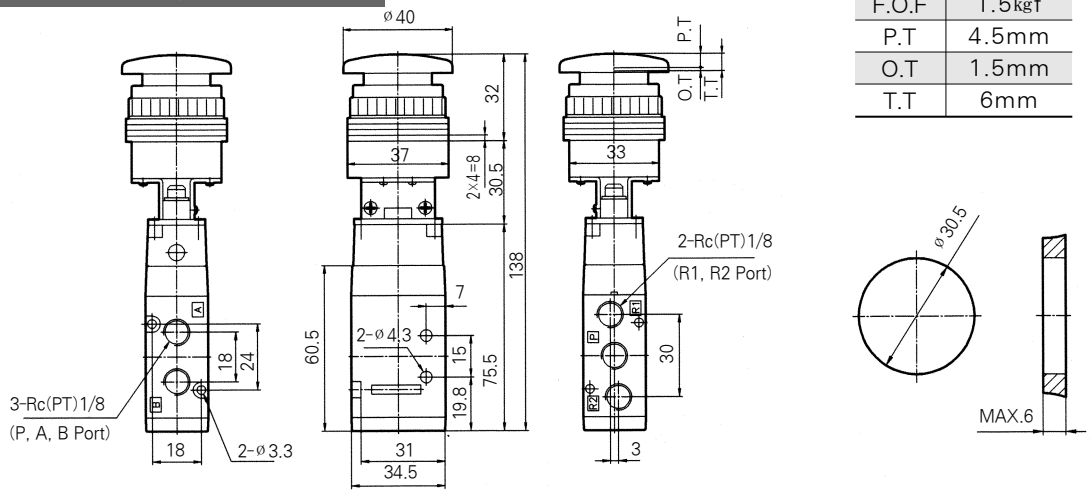

DM450-01P (Push Button/Flush)

F.O.F	1.5kgf
P.T	2.5mm
O.T	1.5mm
T.T	4mm

Symbol

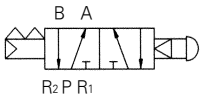

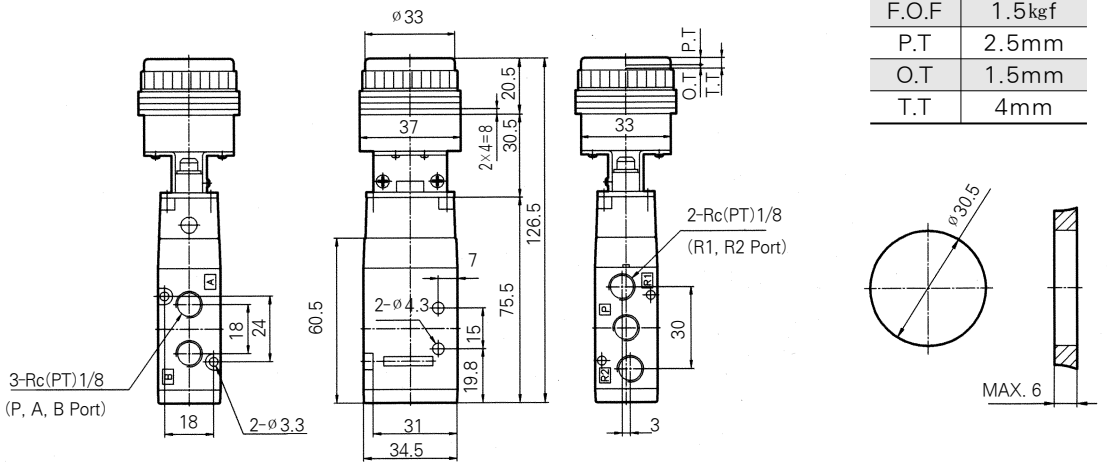

DM450-01S (Selector Type)

F.O.F	1.5kgf
T.T	90 °

Symbol

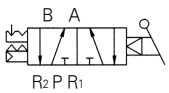

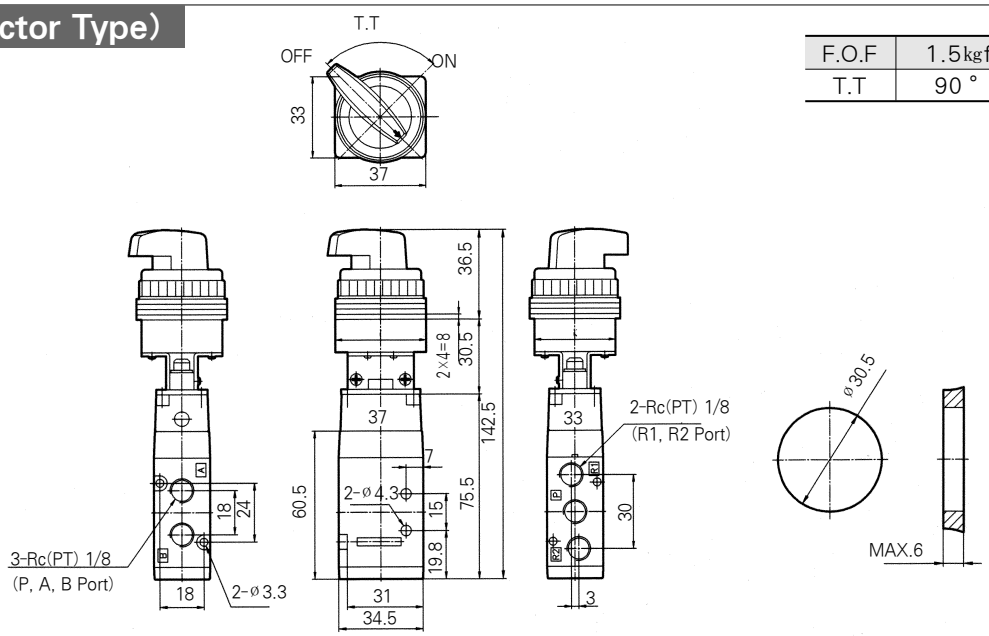

DM550/Construction/Parts List

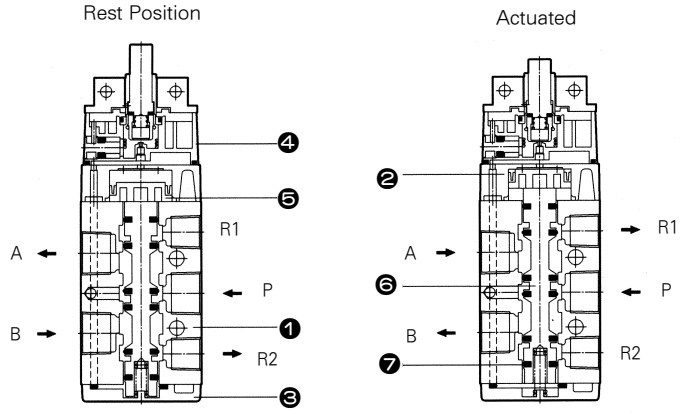

No.	Description	Material
❶	Body	Al
❷	Semi Pilot	ZnDC
❸	Cap	ZnDC
❹	Pilot	PBT
❺	Piston	POM
❻	Spool	A2011
❼	Spool Packing	NBR

DM550-02B (Basic Type)

Symbol

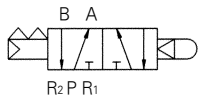

F.O.F	1.5kgf
P.T	1mm
O.T	1.5mm
T.T	2.5mm

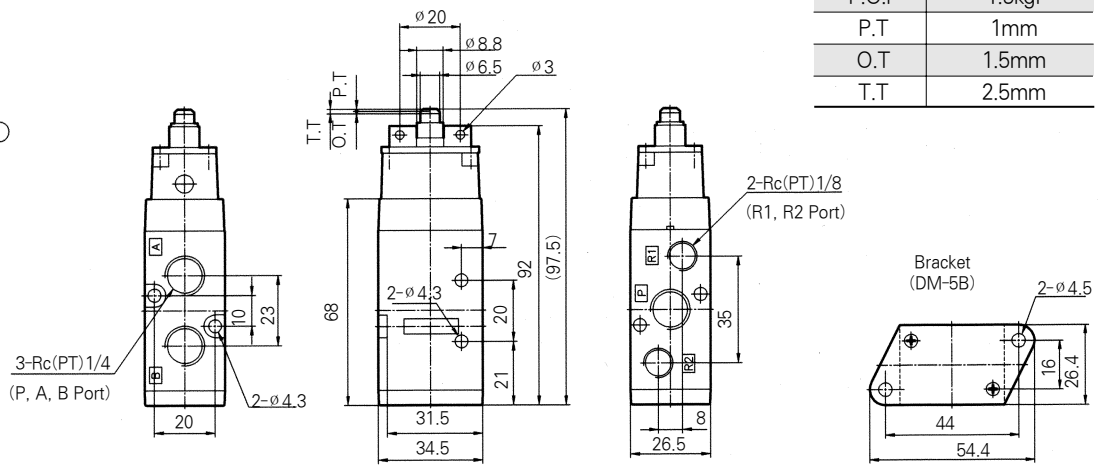

DM550-02R (Roller Plunger)

Symbol

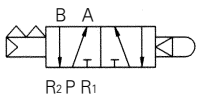

F.O.F	1.0kgf
P.T	1.5mm
O.T	1.5mm
T.T	3mm

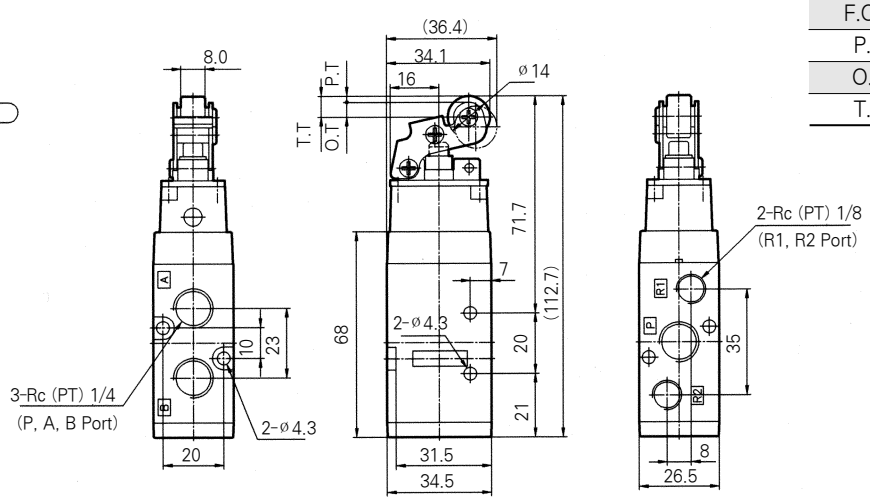

DM550-02E(Push Button/Mushroom)

Symbol

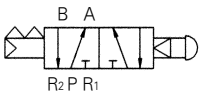

F.O.F	1.5kgf
P.T	4.5mm
O.T	1.5mm
T.T	6mm

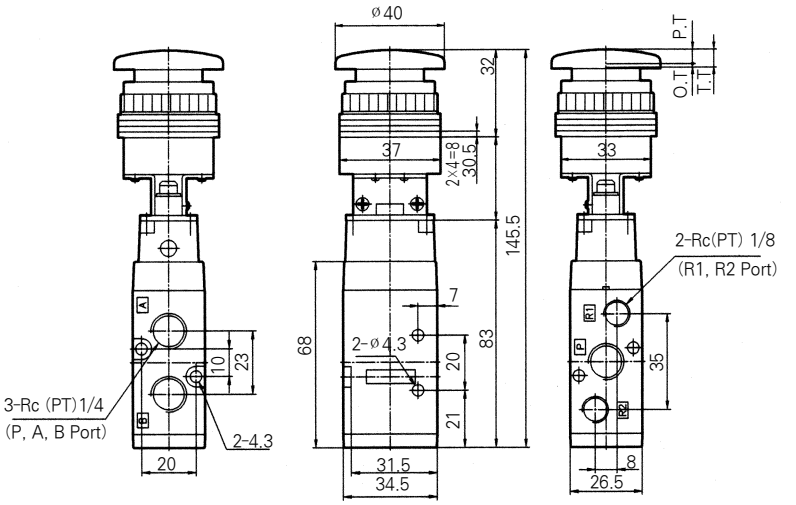

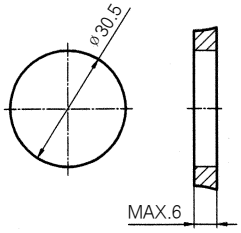

DM550-02P(Push Button/Flush)

Symbol

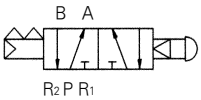

F.O.F	1.5kgf
P.T	2.5mm
O.T	1.5mm
T.T	4mm

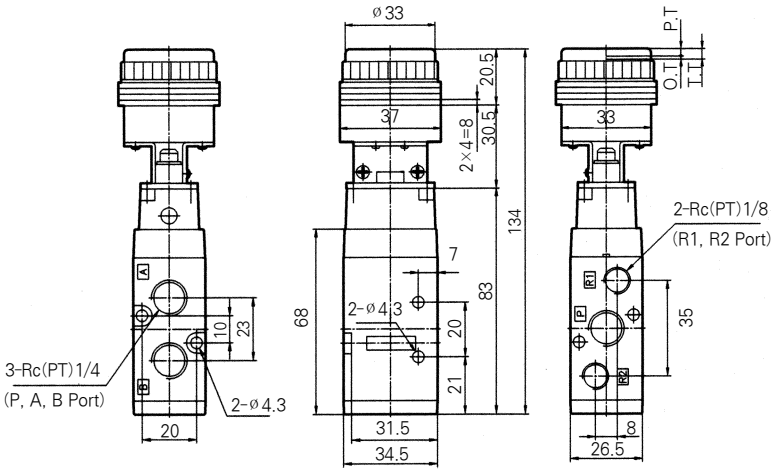

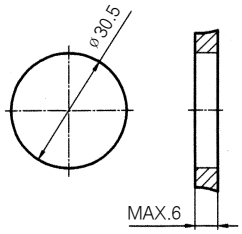

DM550-02S (Selector Type)

Symbol

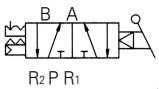

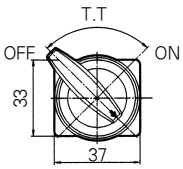

F.O.F	1.5kgf
T.T	90°

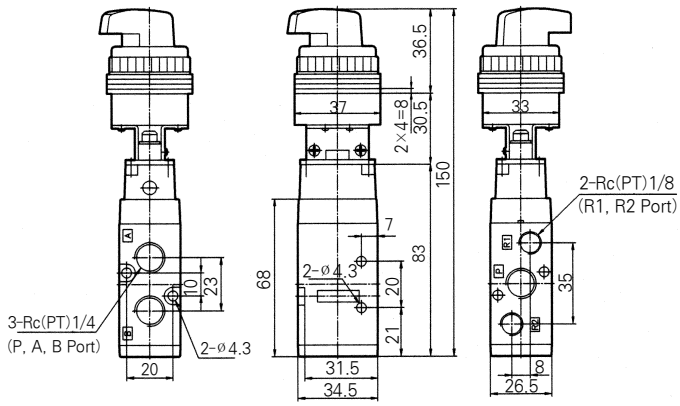

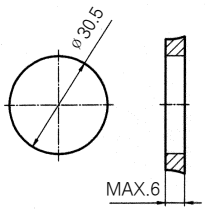

Series DT220

OR Valve (Shuttle Valve)

- 3 ported check valve with one output and 2 pneumatic signal input ports.
- Output always supplied by high pressure inlet

Symbol

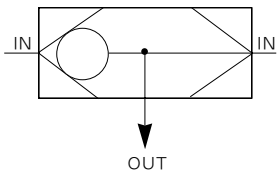

Construction/Dimensions

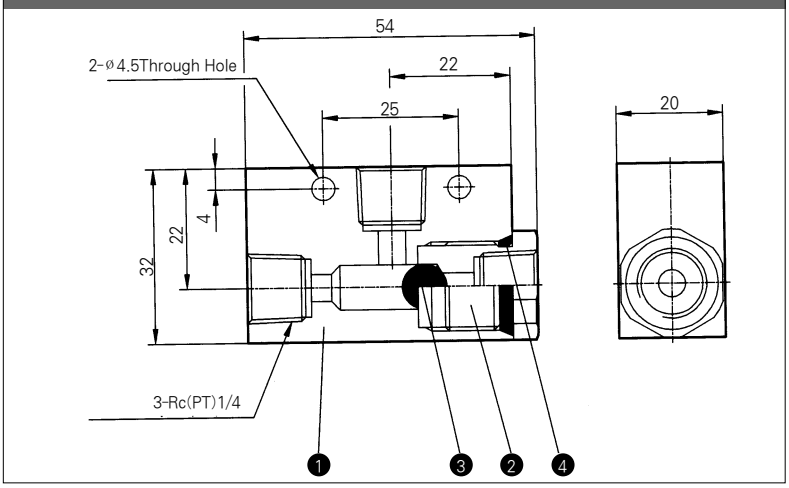

Model/Specifications

Model	DT 220-02
Port Size	Pc(PT)1/4
Max. Operating Pressure	9.9 kgf/cm²
Min. Pressure Differential	0.5 kgf/cm²
Ambient and Fluid Temperature	0~60
Effective Area (Cv)	19mm²(1.0)

Component Parts

No.	Description	Material	Notes
❶	Body	Aluminum Alloy	
❷	Bush	Brass	
❸	Ball	N.B.R	
❹	Gasket	N.B.R	

Structures

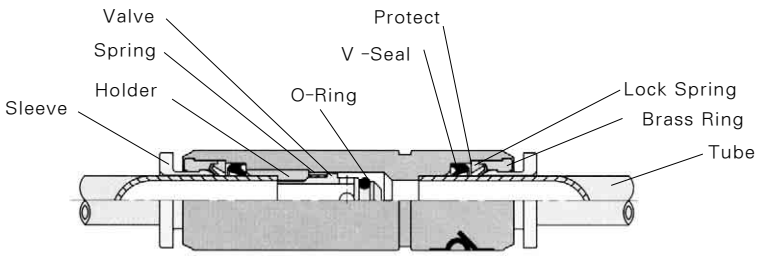

Dimensions

DC Type

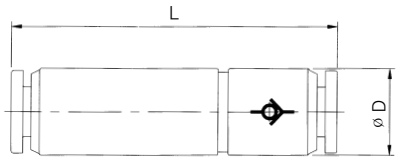

Unit: mm

Model	Tube size	L	D
DC-04	4	38.7	10.6
DC-06	6	44.5	12.6
DC-08	8	48.5	14.6

Specifications

Fluid Admitted	Air, Vacuum
Working Pressure	0.2~9.9kgf/cm^2 {20~99KPa}
Temperature Range	0~60℃

FEATURES

- The Check Valve permits the air flow in one direction but checks the flow in the opposite direction, thus keeping the output dressure at a constant level.

Air Line Equipment

● F · R · L Combination
Series PC2000 ..... C-5
Series PC3000 ..... C-5
Series PC4000 ..... C-5
Series PC5000 ..... C-5

● Air Filter
Series PF2000 ..... C-16
Series PF3000 ..... C-16
Series PF4000 ..... C-16
Series PF5000 ..... C-16

● Air Regulator
Series PR2000 ..... C-21
Series PR3000 ..... C-21
Series PR4000 ..... C-21
Series PR5000 ..... C-21

● Lubricator
Series PL2000 ..... C-26
Series PL3000 ..... C-26
Series PL4000 ..... C-26
Series PL5000 ..... C-26

● Filter / Regulator
Series PW2000 ..... C-30
Series PW3000 ..... C-30
Series PW4000 ..... C-30
Series PW5000 ..... C-30

● Coalescing Filter
Series PFH 3000/4000 ..... C-38
Series PFU 3000/4000 ..... C-38

● Shut-Off Valve
Series SH C-43

● Air Filter
Series TDF15A~30A C-48

● Air Dryer
Series TAD05~TAD750 ..... C-62

Series PC

Filter-Regulator-Lubricator Combination

Standard Combinations

Model/Series		Port size Rc(PT)	Air Filter PF	Regulator PR	Lubricator PL	Filter / Regulator PW
PF+PR+PL 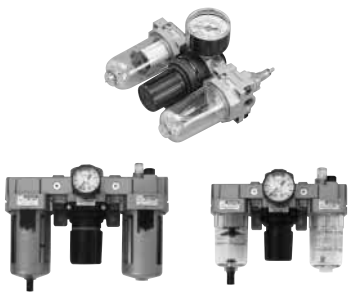	PC2000	1/8 · 1/4	PF2000	PR2000	PL2000	
	PC3000	1/4 · 3/8	PF3000	PR3000	PL3000	
	PC4000	3/8 · 1/2	PF4000	PR4000	PL4000	
	PC5000	3/4 · 1	PF5000	PR5000	PL5000	
PW+PL	PC2010	1/8 · 1/4	-	-	PL2000	PW2000
	PC3010	1/4 · 3/8	-	-	PL3000	PW3000
	PC4010	3/8 · 1/2	-	-	PL4000	PW4000
	PC5010	3/4 · 1	-	-	PL5000	PW5000
PF+PR	PC2020	1/8 · 1/4	PF2000	PR2000	-	-
	PC3020	1/4 · 3/8	PF3000	PR3000	-	-
	PC4020	3/8 · 1/2	PF4000	PR4000	-	-
	PC5020	3/4 · 1	PF5000	PR5000	-	-
PF	PF2000	1/8 · 1/4	10 (Standard)	-	-	Bracket Float type auto-drain
	PF3000	1/4 · 3/8				
	PF4000	3/8 · 1/2				
	PF5000	3/4 · 1				

Air Combinations

Model/Series		Port size Rc(PT)	Filtration (㎛)	Regulating range PSI(kgf/cm²)	Min. operation flow (N ℓ /min)	Accessories
PR	PR2000	1/8 · 1/4	-	7~125 (0.5~8.5)	-	Bracket Pressure gauge
	PR3000	1/4 · 3/8				
	PR4000	3/8 · 1/2				
	PF5000	3/4 · 1				
PL	PL2000	1/8 · 1/4	-	-	1/8:15 1/4:30	Bracket
	PL3000	1/4 · 3/8			1/4:30 3/8:40	
	PL4000	3/8 · 1/2			3/8:40 1/2:50	
	PL5000	3/4 · 1			3/4:120 1:220	
PW	PW2000	1/8 · 1/4	10 (Standard)	7~125 (0.5~8.5)	-	Bracket Pressure gauge Float type auto-drain
	PW3000	1/4 · 3/8				
	PW4000	3/8 · 1/2				
	PW5000	3/4 · 1				
PFH/PFU	PFH3000	1/4 · 3/8	0.3	-	-	Bracket Float type auto-drain
	PFH4000	1/4 · 3/8	0.3			
	PFU3000	1/4 · 3/8	0.01			
	PFU4000	1/4 · 3/8	0.01			

Series PC

Filter, Regulator, Lubricator Combinations

- MODULAR DESIGN
- EASY ASSEMBLY/DISASSEMBLY
- EASY MAINTENANCE
- FINE OIL ADJUSTMENT
- (ONE-TOUCH) BOWL GUARD
- REFILL UNDER PRESSURE

Symbol

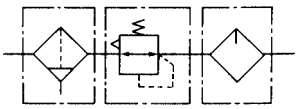

How to Order

□ PC 20 00 03 DG — ○

1 2 3 4 5 6 7

1 Port thread
Blank : Rc(PT)
UPC Series : NPT

2 Air Combination

3 Body size
20 : 1/4
30 : 3/8
40 : 1/2
50 : 1

4 Components
00 : Air Filter(PF)+ Regulator(PR)+ Lubricator(PL)
10 : Filter Regulator(PW)+ Lubricator(PL)

20 : Air Filter(PF)+ Regulator(PR)
Note: Order of assembly

Example
00 : PF+PR+PL
10 : PW+PL
20 : PF+PR

5 Port size
01 : Rc(PT) 1/8
02 : Rc(PT) 1/4
03 : Rc(PT) 3/8
04 : Rc(PT) 1/2
06 : Rc(PT) 3/4
10 : Rc(PT) 1

6 Accessory
D : Auto drain : Float type(N.O)
※ PC2000 : Differentiol Pressure Type
G : Pressure Gauge

7 Special Option
Blank : Standard type
XC16 : Copper-free
C : Metal guide (C is basic to PC4000,5000)

Standard Specifications

Model		PC2000	PC3000	PC4000	PC5000
Combination	Air Filter	PF2000	PF3000	PF4000	PF5000
	Regulator	PR2000	PR3000	PR4000	PR5000
	Lubricator	PL2000	PL3000	PL4000	PL5000
Port size Rc(PT)		1/8, 1/4	1/4, 3/8	3/8, 1/2	3/4, 1
Port size for pressure gauge Rc(PT)		1/8			
Max. Supply Pressure		15㎏f/㎠ (1.5MPa)			
Max. Operating Pressure		9.9㎏f/㎠ (990Kpa)			
Regulating Range		0.5~8.5㎏f/㎠ (50~850KPa)			
Max. Flow rate Nℓ/min		500	2000	4000	5000
Ambient and Media temperature		5~60℃			
Filtration		Standard : 10㎛			
Recommended oil		Turbine Oil ISO VG32			
Bowl Material		Polycarbonate			
Construction/Regulator		Relieving type			
Weight (㎏f)		0.63	1.18	2.14	3.06

※ Conditions : Supply Pressure7kgf/cm², Setting pressurre - 5 kgf/cm²

Flow Characteristics

※ Operating pressure : 7 kgf/㎠

PC2000

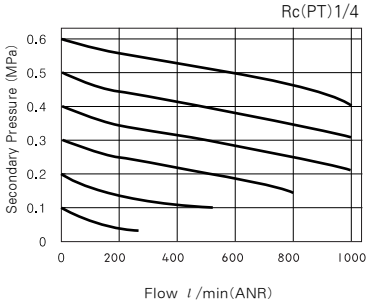

PC3000

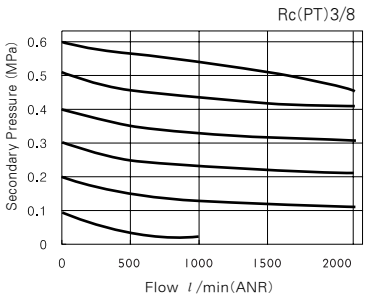

PC4000

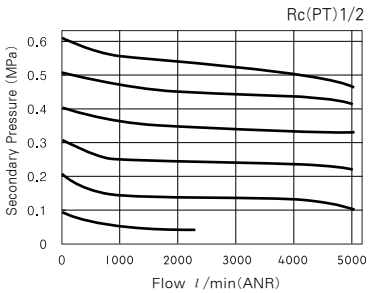

PC5000

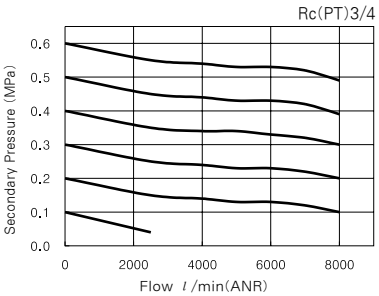

PC5000

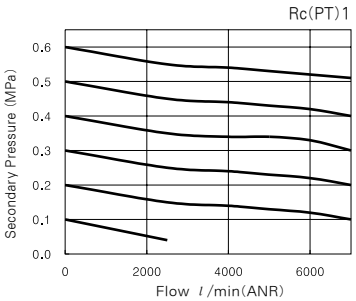

Pressure Characteristics

※ Operating pressure : 7 kgf/㎠
Secondary pressure : 2 kgf/㎠
Flow : 20Nl/min

PC2000

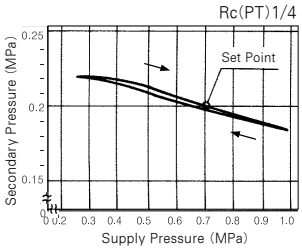

PC3000

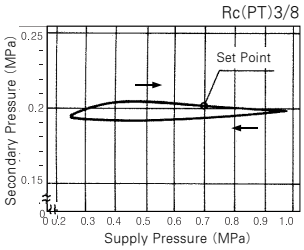

PC4000

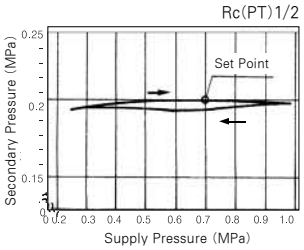

PC5000

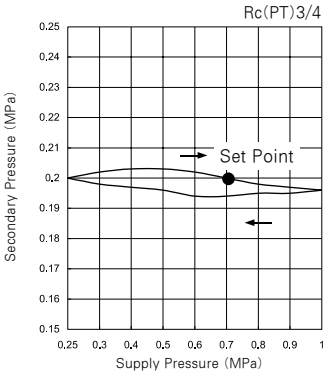

PC5000

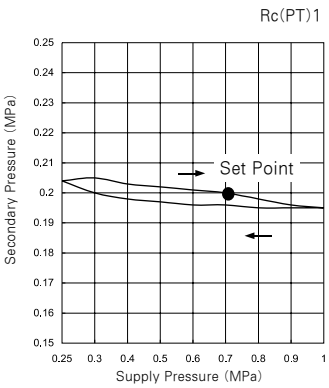

Precautions

Installation

① Flush piping before installation.
② The use of the piping adapters will make installation easier.
③ The regulator may be installed with the adjustment knob up or down.

Atmosphere

① Polycarbonate bowls may be damaged and possibly fail if exposed to synthetic oils, thinner solvents, trichlorethylene, kerosene of other aromatic hydro-carbons.

Auto Drain

Float type (Normally Open) / PC3000, 4000

① Drain line should be 8mm or more and should be less than 5m long. Be sure not to have any upward turns in the drain line which would prevent drainage.
② Unsuitable for flow below 100N ℓ/min
③ Min. operating pressure is 1kgf/㎠
④ Soft nylon tube of more than ⌀2.5 O.D, is recommended for drain pipe. The length should be less than 5m long.
⑤ Should be installed vertically.

Accessory(Optional)

Name		Part No.			
		PC2000	PC3000	PC4000	PC5000
Pressure gauge	—	TAR4000-16-6001			
Auto drain	N·O	※※ PF2000 -01A6039	※TAF3000 -01A-6008	※TAF4000 -01A-6009	※PC5000 -01A-6071

※ Min. operating pressure:N·O 1kgf/cm²
※※ Differental Pressure Type

Dimensions

(mm)

PC2000

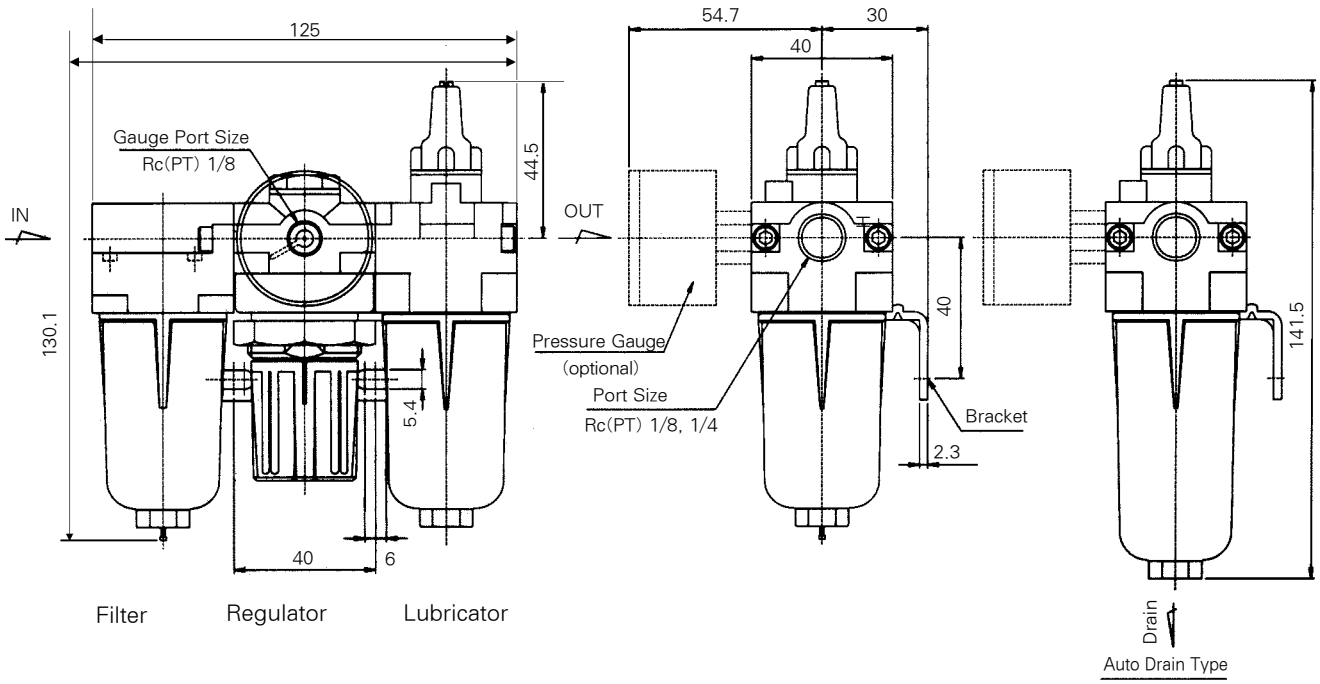

Dimensions

(mm)

PC3000

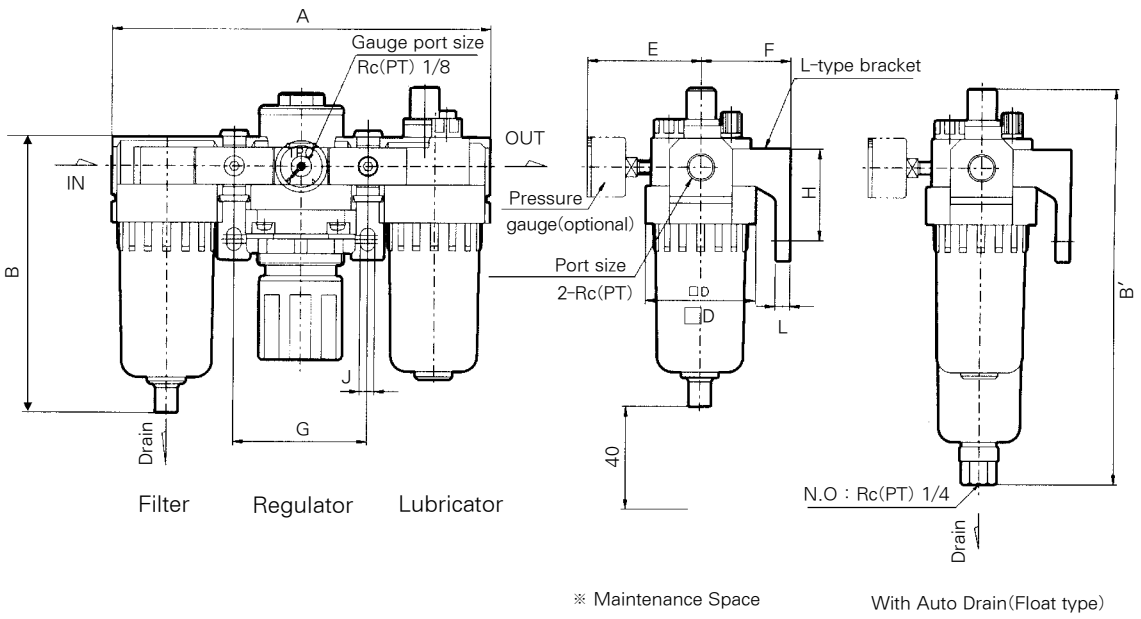

PC4000

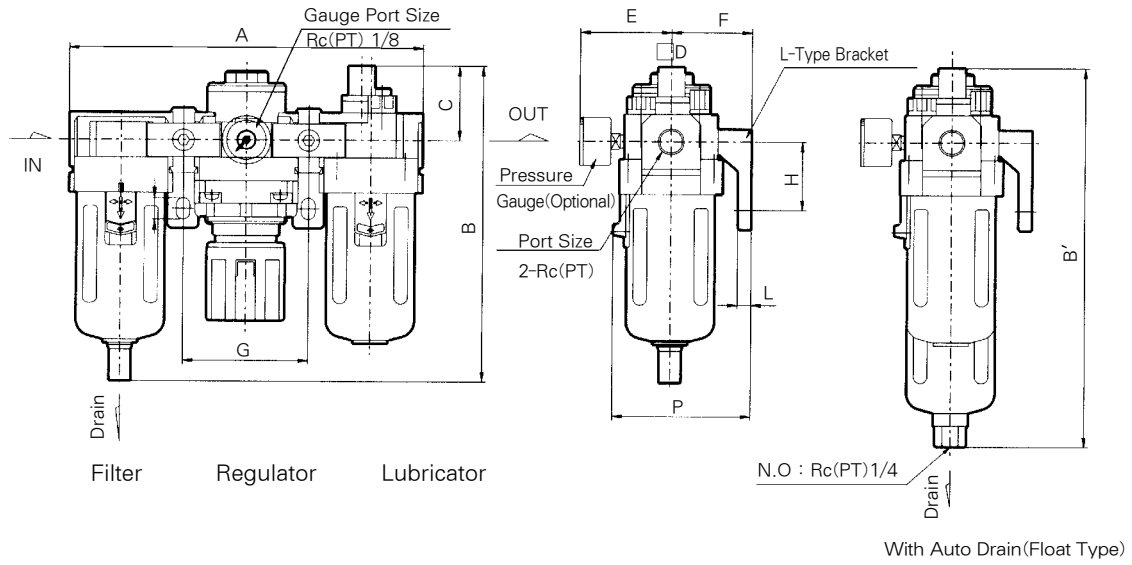

(mm)

Model	Port Size Rc(PT)	A	B	C	D	E	F	G	H	J	K	L	P	With Auto Drain Float Type N·O B′
PC3000	1/4 · 3/8	181	155.5	38	53	61.5	41	64	35	7	11	7	-	181
PC4000	3/8 · 1/2	238	195	41	70	65.5	50	84	40	9	13	7	88	216

Structure / PC5000

(mm)

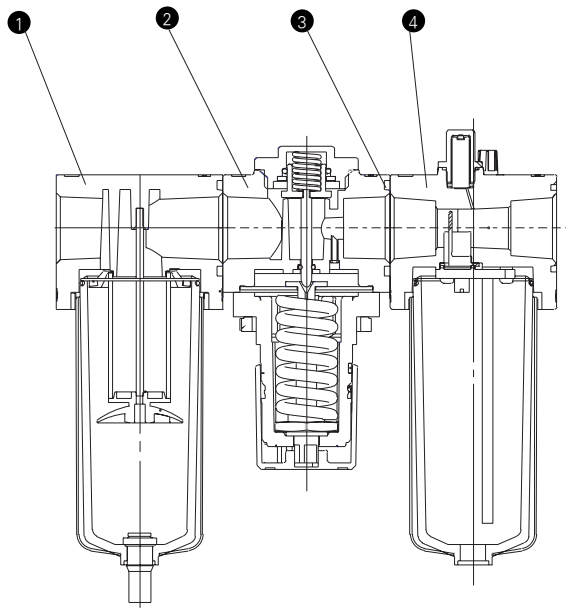

Parts List

NO.	Name	Material	Note
1	Filter Ass' y		
2	Regulator		
3	Lubricator Ass' y		
4	Combination O-ring	N.B.R	

Dimensions / PC5000

(mm)

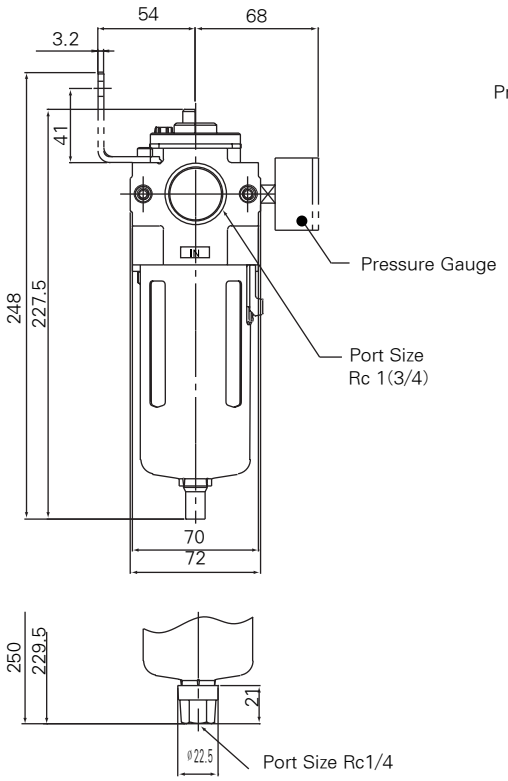

Auto Drain Type

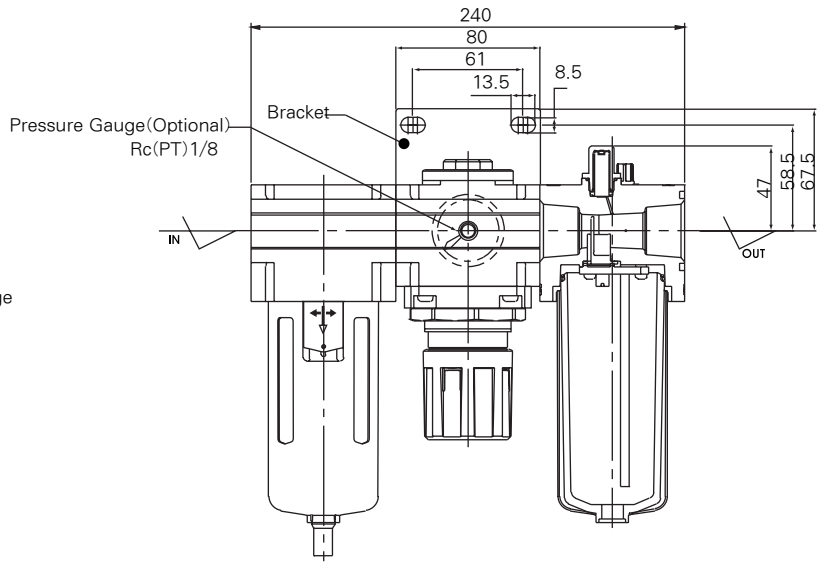

Series PC 2010 • 3010 • 4010 • 5010

Modular Filter/Regulator, Lubricator Combination

Symbol

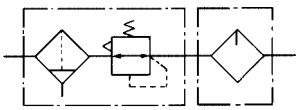

Filter Regulator Lubricator

Standard Specifications

Model		PC2010	PC3010	PC4010	PC5010
Combination	Filter Regulator	PW2000	PW3000	PW4000	PW5000
	Lubricator	PL2000	PL3000	PL4000	PL5000
Port size Rc(PT)		1/8, 1/4	1/4, 3/8	3/8, 1/2	3/4, 1
Port size for Pressure		1/8			
Max. Flow rate Nℓ/min		500	1,700	3,000	5,000
Weight (kgf)		0.66	0.98	1.93	2.23

※ Conditions:Supply pressure - 7 kgf/cm^2, Setting pressure-5 kgf/cm^2
※ Add Note as on PC

● Accessory(Optional)

Name		Part No.			
		PC2010	PC3010	PC4010	PC5010
Pressure gauge	—	TAR4000-16-6001			
Auto drain	N·O	※※PF2000 -01A-6039	※TAF3000 -01A-6008	※TAF4000 -01A-6009	※PF5000 -01A-6071

※ Min. Operating Pressure : N · O 1kgf/cm^2
※※ Differential Pressure Type

Dimensions

(mm)

PC2010

With Auto Drain

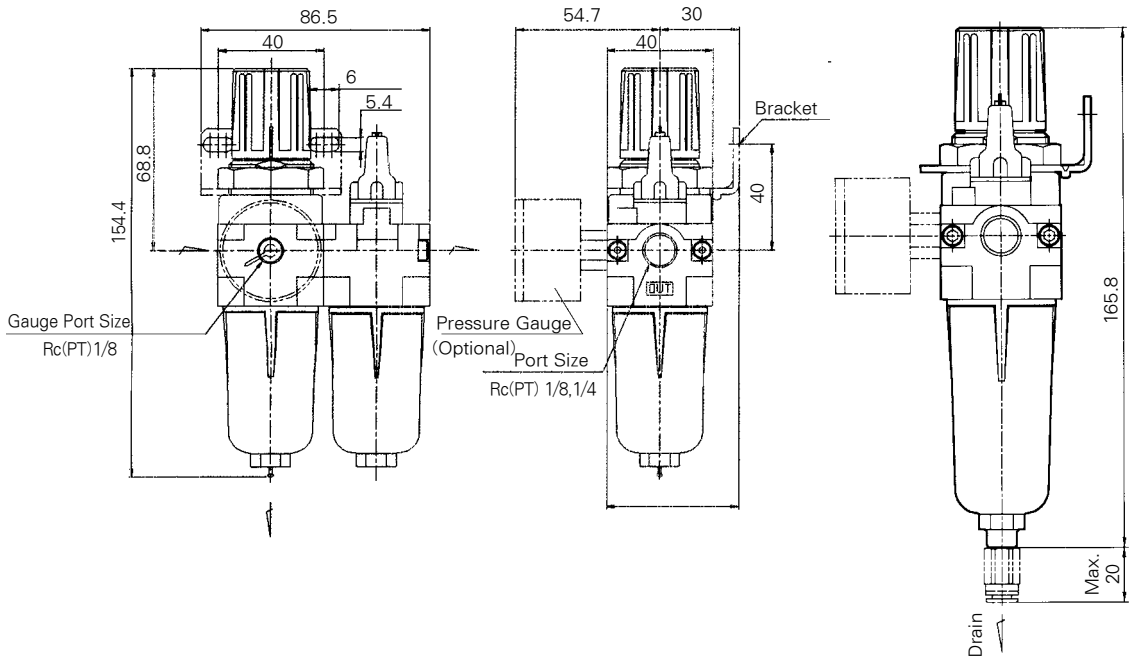

PC5010

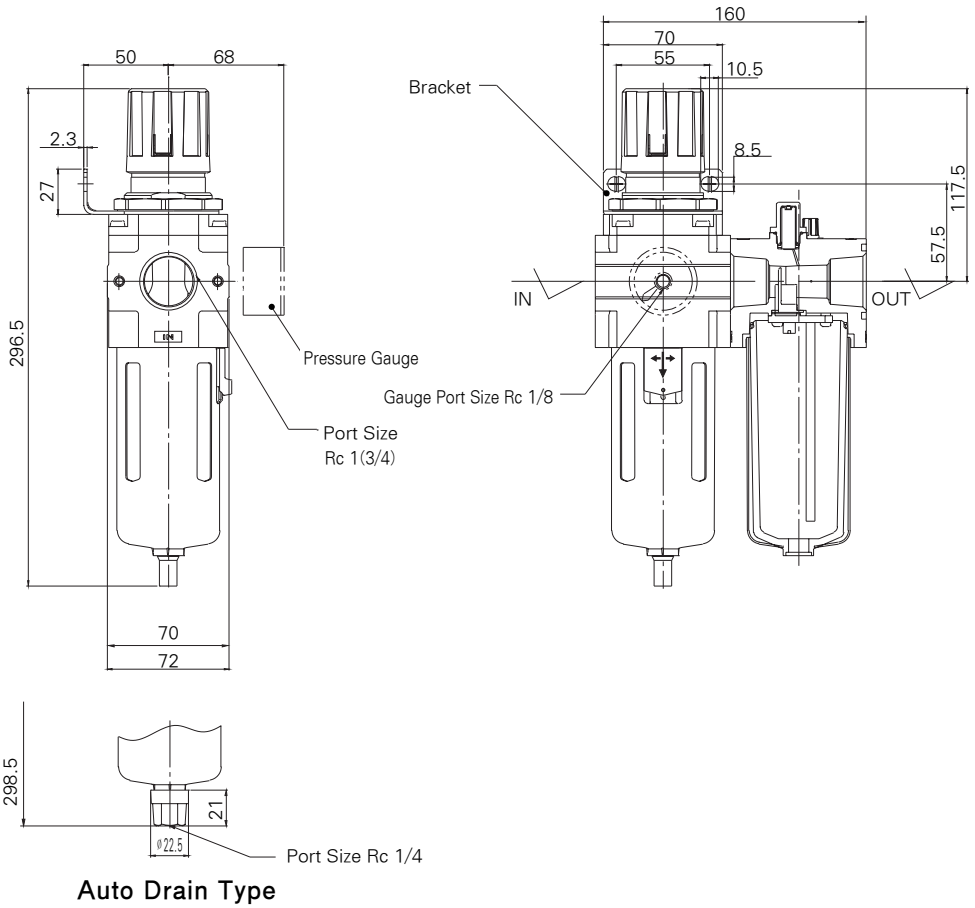

Auto Drain Type

Dimensions

(mm)

PC3010

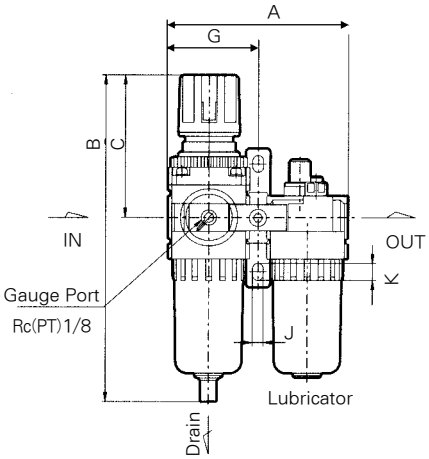

Filter Regulator

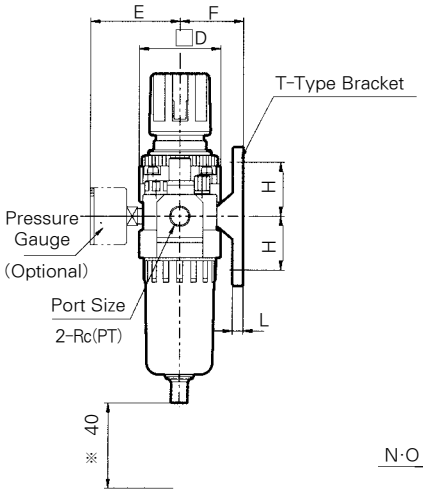

※ Maintenance Space

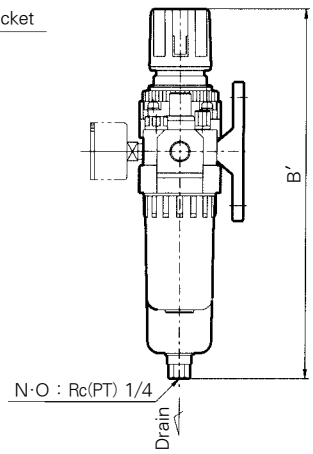

With Auto Drain(Float Type)

PC4010

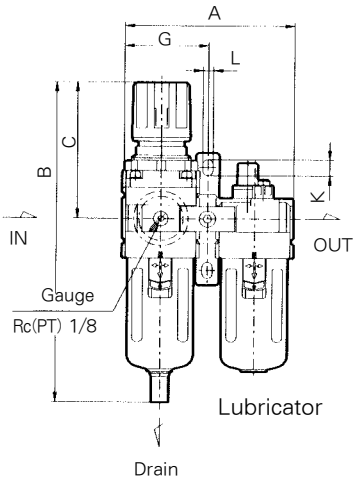

Filter Regulator

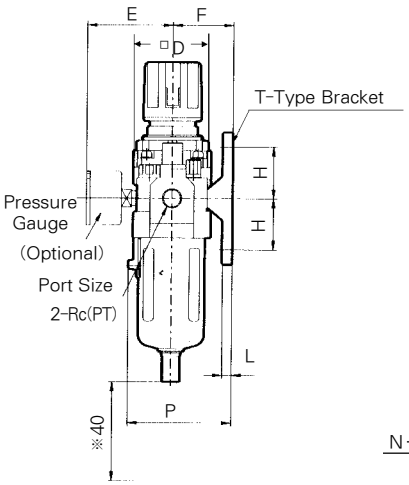

※ Maintenance Space

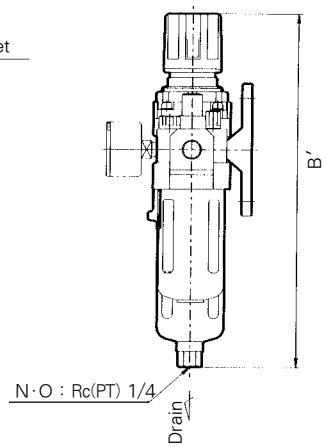

With Auto Drain(Float Type)

(mm)

Model	Port Size Rc(PT)	A	B	C	D	E	Mounting Bracket						P	With Auto Drain Float Type N·O
							F	G	H	J	K	L		B′
PC3010	1/4 · 3/8	117	211	92.5	53	61.5	41	58.5	35	7	11	7	-	234
PC4010	3/8 · 1/2	154	266	112	70	68	50	77	40	9	13	7	88	287

Series PC 2020 • 3020 • 4020 • 5020

Modular Filter, Regulator Combination

Standard specifications

Model		PC2020	PC3020	PC4020	PC5020
Combination	Air Filter	PF2000	PF3000	PF4000	PF5000
	Regulator	PR2000	PR3000	PR4000	PR6000
Port Size Rc(PT)		1/8, 1/4	1/4, 3/8	3/8, 1/2	3/4, 1
Port size for Pressure gauge Rc(PT)		1/8			
Regulating Range		0.5 ~ 8.5kgf/cm^2			
Weight (kgf)		0.36	0.82	1.61	2.01
※ Max. Flow rate (N ℓ /min)		550	1,500	4,000	5,000

※ Conditions:Supply pressure-7 kgf/cm^2 , Setting pressure-5 kgf/cm^2

Symbol

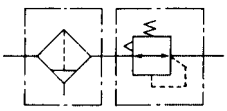

Air Filter Regulaor

● Accessory(Optional)

Name		Part No.			
		PC2020	PC3020	PC4020	PC5020
Pressure Gauge	—	TAR4000-16-6001			
Float Type Auto Drain	N·O	※※PF2000 -01A-6039	※TAF3000 -01A-6008	※TAF4000 -01A-6009	※PF5000 -01A-6071

※ Min. Operating Pressure : N · O 1kgf/cm^2
※※ Differential Pressure Type

Dimensions

(mm)

PC2020

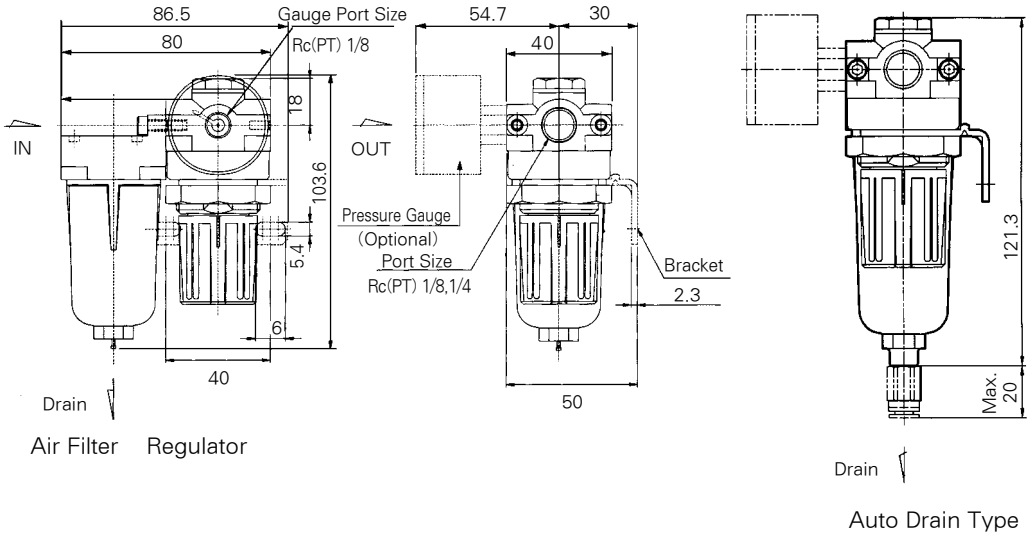

PC5020

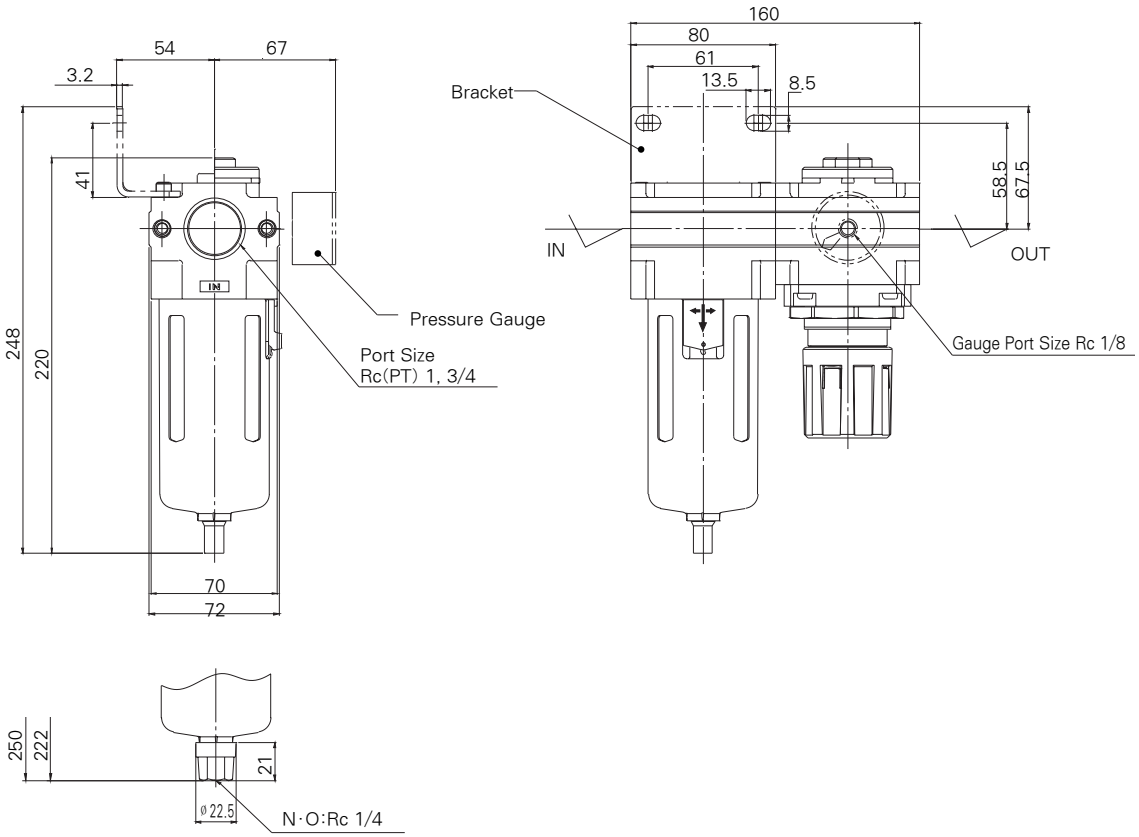

Auto Drain Type

Dimensions

(mm)

PC3020

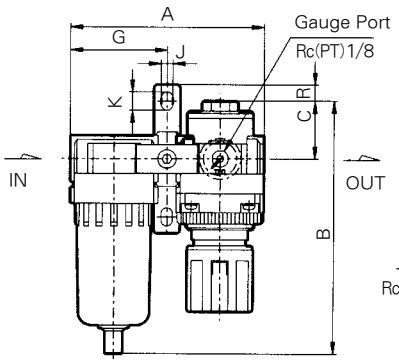

Air Filter Regulator

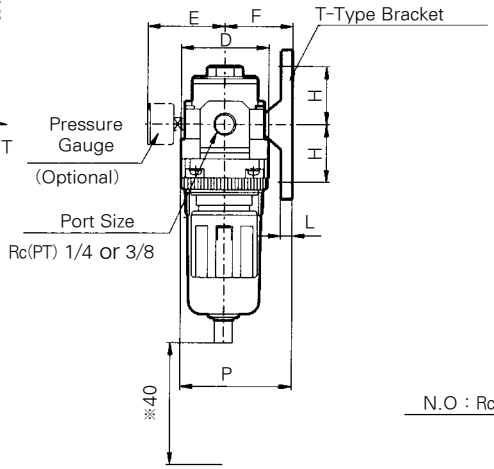

※ Maintenance Space

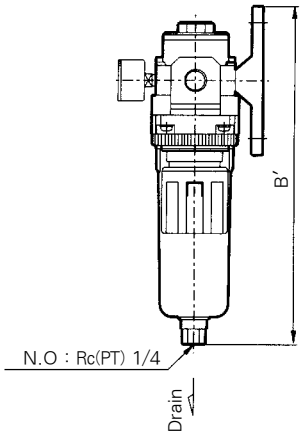

With Auto Drain(Float Type)

PC4020

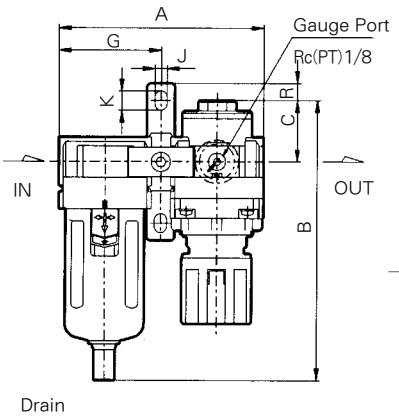

Air Filter Regulator

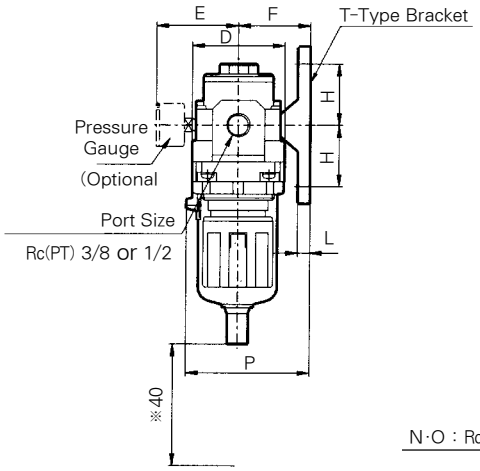

※ Maintenance Space

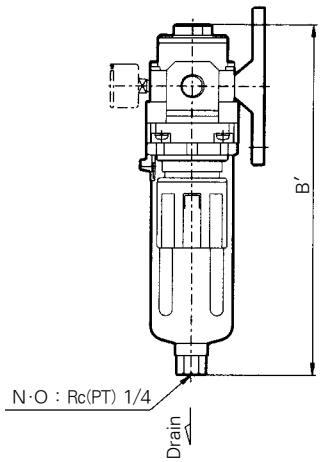

With Auto Drain(Float Type)

(mm)

Model	Port Size Rc(PT)	A	B	C	D	Mounting Bracket							P	R	With Auto Drain Float Type N·O
						E	F	G	H	J	K	L			B′
PC3020	1/4 · 3/8	117	157	35	53	61.5	41	58.5	35	7	11	7	67.5	10	178
PC4020	3/8 · 1/2	154	188	37.5	70	65.5	50	77	40	9	13	7	88	12.5	212.5

Series PF 2000 • 3000 • 4000 • 5000

Air Filter

Accessory(Optional)

Name	Part No.			
	PF2000	PF3000	PF4000	PF5000
Bracket	PF2000-43-6034	AF3000-43-6004	TAC4000-08-6003	PC5000-08-6075
Auto drain	※※PF2000-01A-6039	※TAF3000-01A-6008	※TAF4000-01A-6009	PC5000-01A-6071

※ Min Operating Pressure : 1 kgf/cm^2
※※ Differential Pressure Type

Symbol

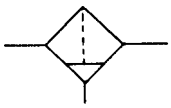

How to Order

PF 30 00 — 03 B — ○

1 2 3 4 5

1 Air Filter

2 Body Size
- 20 : 1/4
- 30 : 3/8
- 40 : 1/2
- 50 : 1

3 Port size
- 01 : Rc(PT) 1/8
- 02 : Rc(PT) 1/4
- 03 : Rc(PT) 3/8
- 04 : Rc(PT) 1/2
- 06 : Rc(PT) 3/4
- 10 : Rc(PT) 1

4 Accessory
- B : Bracket
- D : Float Type Auto Drain(N·O)
- ※ PF2000 : Differential Pressure Type

5 Special Option
- Blank : Standard Type
- XC16 : Copper-free
- D : Metal guide
  (C is basic to PF4000, PF5000)

Specifications

Model	PF2000	PF3000	PF4000	PF5000
Port size Rc(PT)	1/8, 1/4	1/4, 3/8	1/4, 3/8	3/4, 1
Max. Supply Pressure	5 kgf/cm^2 {1.5MPa}			
Max. Operating Pressure	9.9 kgf/cm^2 {990KPa}			
Ambient and Media Temperature	5~60℃			
Filtration	Standard:10㎛			
Bowl Material	Polycarbonate			
Bowl Capacity (㎤)	10	23	45	80
Weight (kgf)	0.16	0.29	0.55	0.84

Flow Characteristics

PF2000

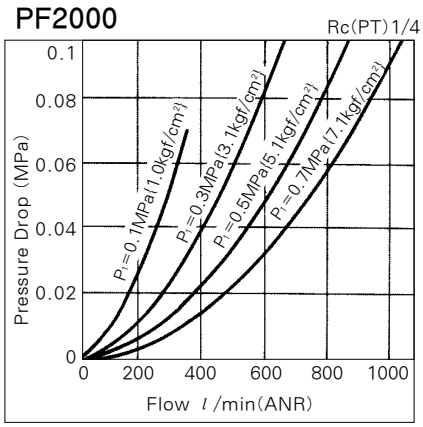

PF3000

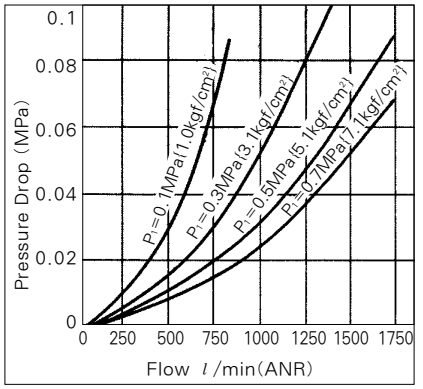

PF4000

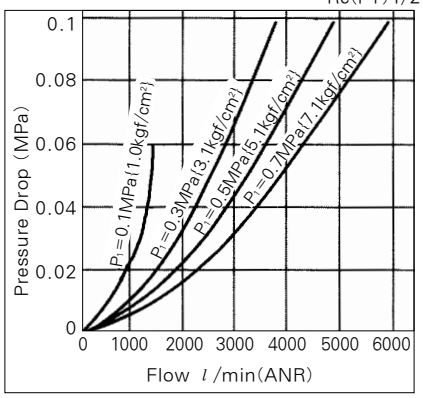

PF5000

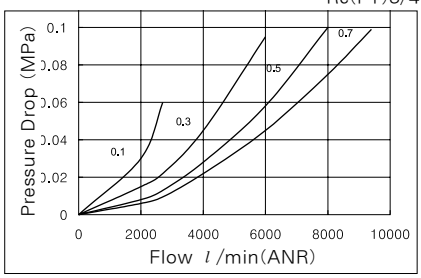

Precautions

PF5000

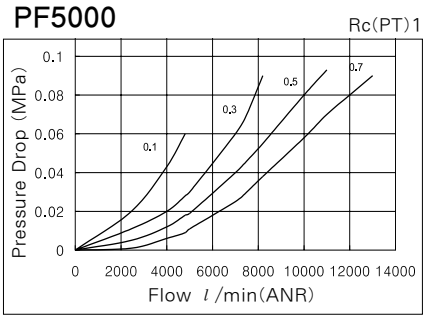

Installation

Flush piping before installation.

Atmosphere

Polycarbonate bowls may be damaged and could fail if exposed to synthetic oils, thinner solvents, trichlothylene, kerosene or other aromatic hydrocarbons.

Auto Drain

Float type (Normally Open) (PC3000,PC4000, PC5000)

① Drain line should be or more and should be less than 5m. Be sure not to have any upward turns in the drain line which would prevent drainage.

② Unsuitable for flow below (100N l /min).

③ Min. operating pressure 1㎏f/㎠
Soft nylon tube of more than ⌀2.5O.D, is recommended for drain pipe. The length should be less than 5m long.

Maintenance

Filter element should be changed after 1 year or when a pressure drop of 1 kgf/cm² is reached.

Float Type

N·O Type
/PF2000-01A-6039
/TAF3000-01A-6008
/TAF4000-01A-6009
/PF5000-01A-6071

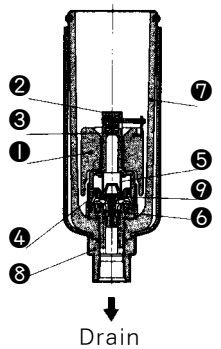

Without pressure inside the bowl, float ① is down by gravity and valve ② closes chamber hole ③ Piston ④ is pushed down by spring ⑤ and condensate passes through ⑨ into drain housing and exhausted. With pressure inside the bowl ⑦ The piston raises by overcoming spring ⑤ force. When condensate collects, the float ① goes up by buoyancy, and opens the bleed hole ③ and spring force and condensate is exhausted through drain guide ⑧

Construction/Parts List

Symbol

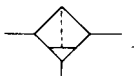

PF 2000

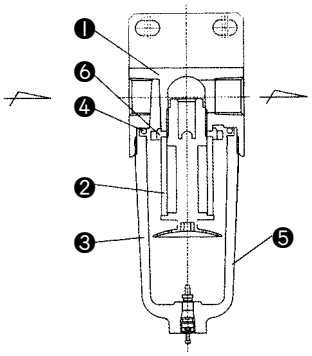

PF 3000

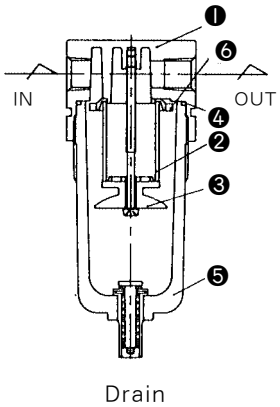

PF 4000

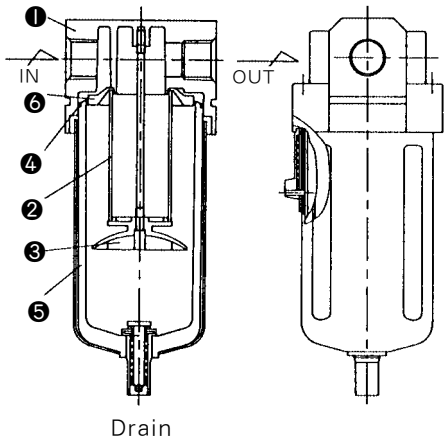

Main Parts

No.	Name	PF Material		Note
		PF2000	PF3000 · 4000	
❶	Body	Zinc · Die cast	Aluminum Die Cast	Baked Enamel Painting

Parts List

No.	Name	Part No.		
		PF2000	PF3000	PF4000
❷	Filter Element	PF2000-05-6034	TAF3000-05-6004	TAF4000-05-6000
❸	Baffle	PF2000-06-6034	TAF3000-06-6004	TAF4000-06-6000
❹	O-ring	PF2000-08-6034	TAF3000-08-6004	TAF4000-08-6000
❺	Bowl Assembly	PF2000-07-6034	TAF3000-07A-6004	TAF4000-07A-6000
❻	Deflector	PF2000-04-6034	TAF3000-04-6004	TAF4000-04-6000

Dimensions

(mm)

PF 2000

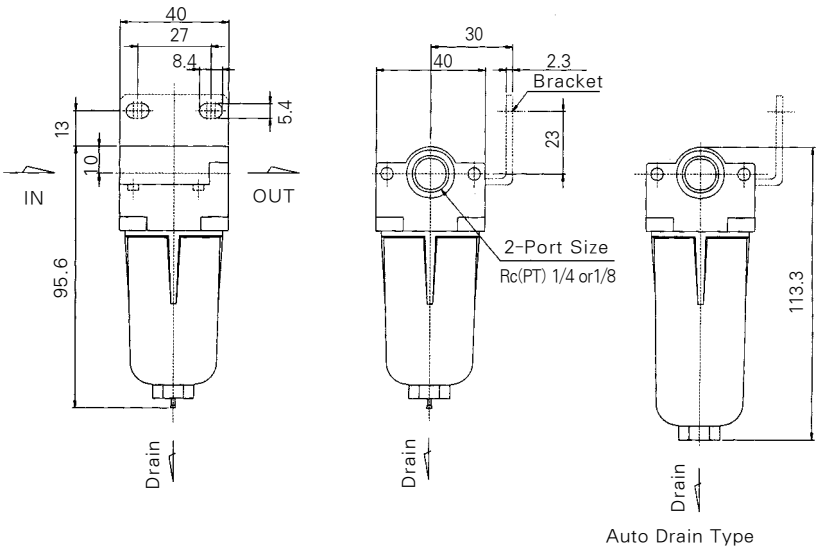

Construction/Parts List

PF5000

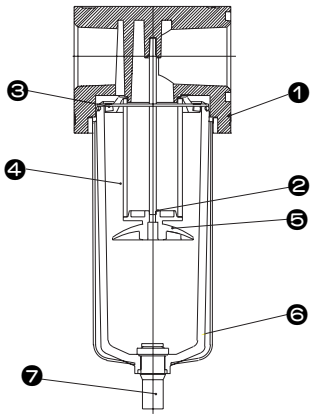

Main Part/Parts LIST

NO.	Name	Material	Note
❶	Body	Aluminum Die Casting	
❷	Baffle Shaft	Copper	
❸	Deflector	ABS	
❹	Filter Element	Synthetic Resin	
❺	Baffle	ABS	
❻	Case Ass' y	Poly Cabonate	
❼	Drain Ass' y	Rubber	

Dimensions

(mm)

PF5000

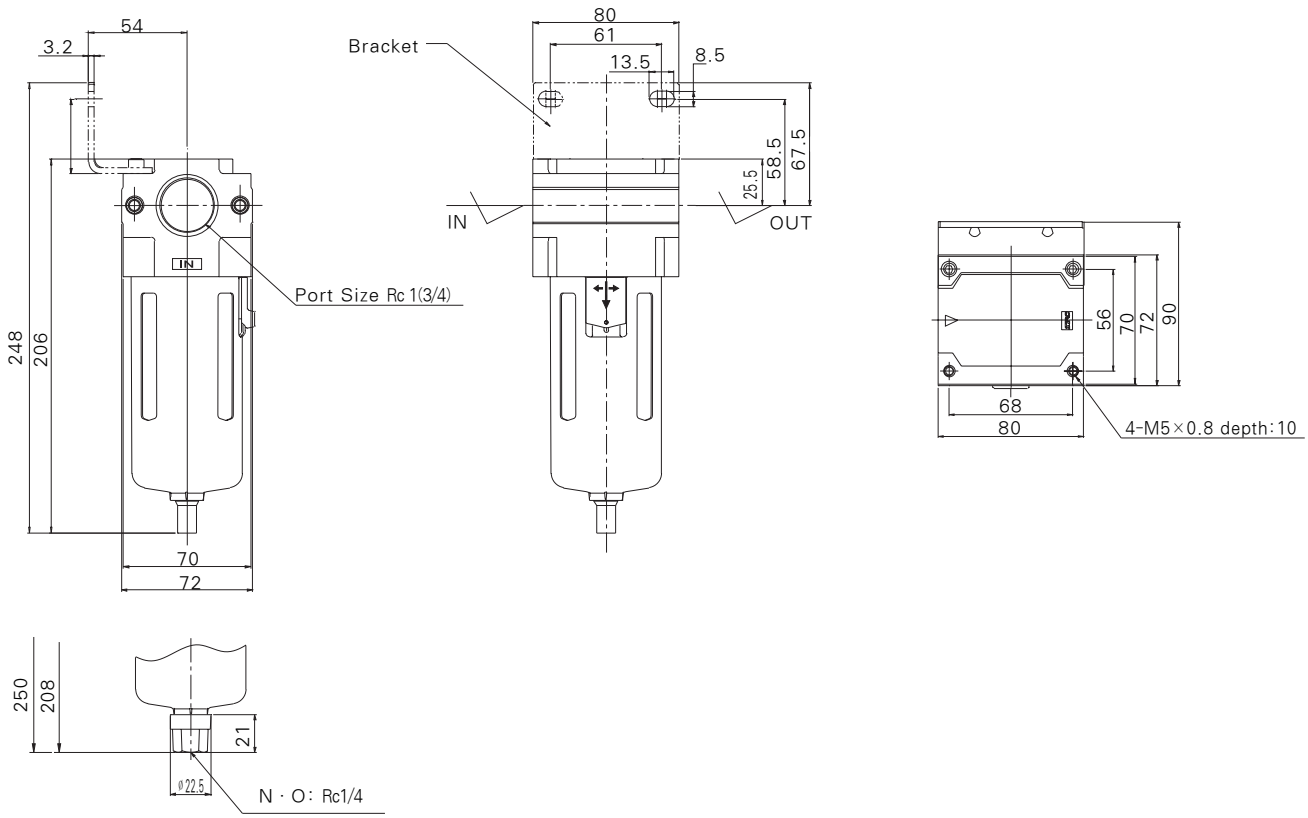

Auto Drain Type

TPC PNEUMATICS

Dimensions

(mm)

PF 3000

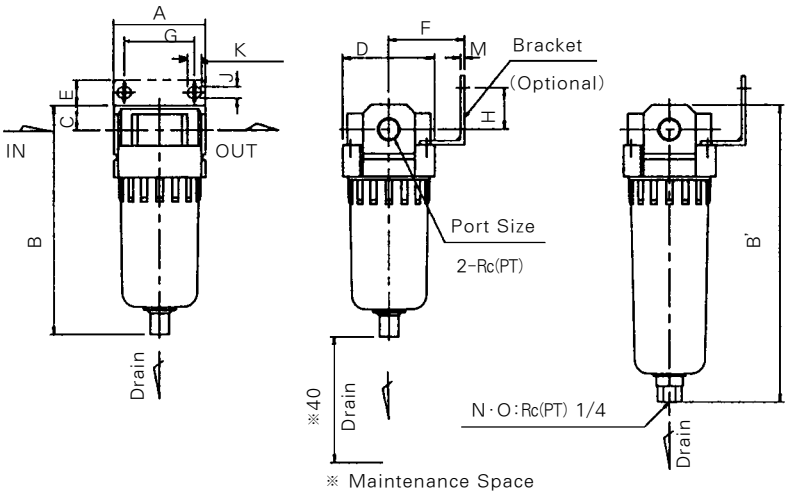

With Auto Drain(Float Type)

PF 4000

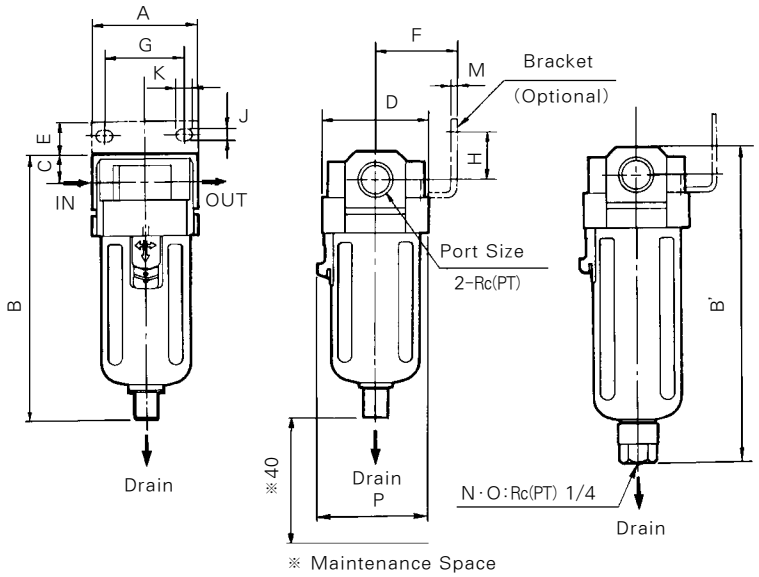

With Auto Drain(Float type)

(mm)

Model	Port Size Rc(PT)	A	B	C	D	Mounting Bracket							P	With Auto Drain Float Type N·O
						E	F	G	H	J	K	M		B′
PF3000	1/4 · 3/8	53	135.5	14	53	16	41	40	23	6.5	8	2.3	–	157
PF4000	3/8 · 1/2	70	172	18	70	17	50	54	26	8.5	10.5	2.3	73	193

Series PR 2000 • 3000 • 4000 • 5000

Regulator

PR2000

PR3000

PR4000 / PR5000

Accessory(Optional)

Name	Part No.			
	PR2000	PR3000	PR4000	PR5000
Bracket	PC2000-43-6035	TAR3000-43-6005	TAC4000-09-6003	TAC4000-09-6003
Pressure Gauge	TAR4000-16-6001			

Symbol

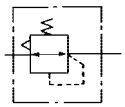

How to Order

PR 30 00 — 03 BG — ○

1 2 3 4 5

1 Regulator

2 Body Size
- 20 : 1/4
- 30 : 3/8
- 40 : 1/2
- 50 : 1

3 Port Size
- 01 : Rc(PT) 1/8
- 02 : Rc(PT) 1/4
- 03 : Rc(PT) 3/8
- 04 : Rc(PT) 1/2
- 06 : Rc(PT) 3/4
- 10 : Rc(PT) 1

4 Accessory
- B : Bracket
- G : Pressure Gauge

5 Special Option
- Blank : Standard Type
- XC16 : Copper-free

Specifications

Model	PR2000	PR3000	PR4000	PR5000
Port Size Rc(PT)	1/8, 1/4	1/4, 3/8	3/8, 1/2	3/4, 1
Max. Supply Pressure	15kgf/㎠ {1.5 MPa}			
Max. Operating Pressure	9.9kgf/㎠ {990 Kpa}			
Regulating Range	0.5~8.5kgf/㎠ (50~850Kpa)			
Port size for Pressure Gauge Rc(PT)	1/8			
Ambient and Media Temperature	5~60℃			
Construction	Relieving Type			
Weight (kgf)	0.21	0.41	0.84	1.14

Flow Characteristics

※ Operating pressure: 7 kgf/㎠

PR2000

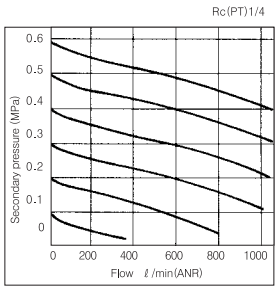

PR3000

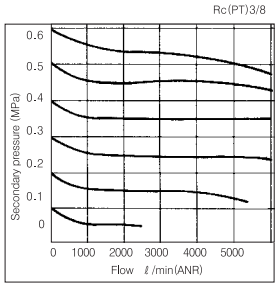

PR4000

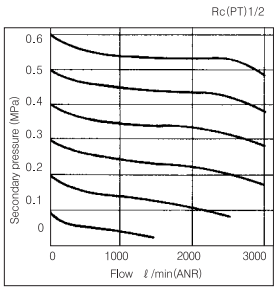

PR5000

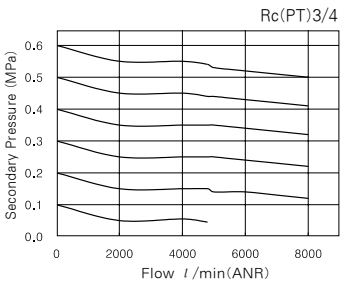

PR5000

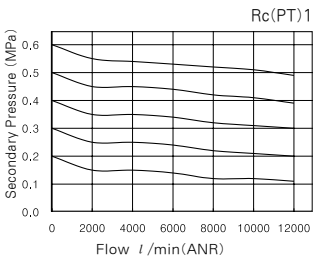

Pressure Characteristics

※ Operating pressure : 7 kgf/㎠
Secondary pressure : 2 kgf/㎠
Flow : 20N ℓ/min

PR2000

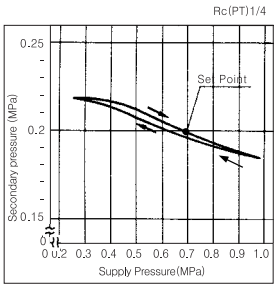

PR3000

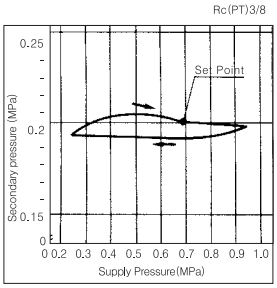

PR4000

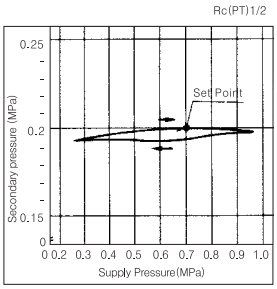

PR5000

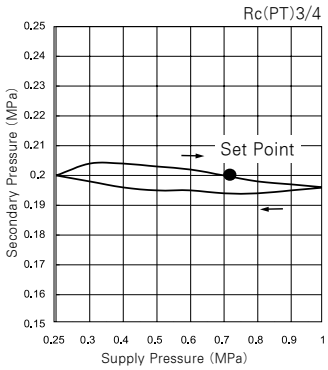

PR5000

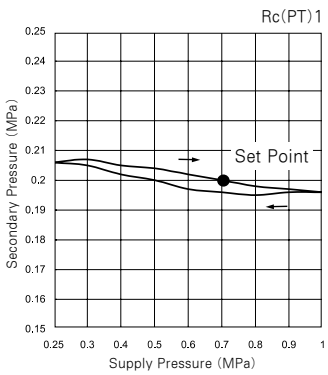

Construction/Parts List

PR2000

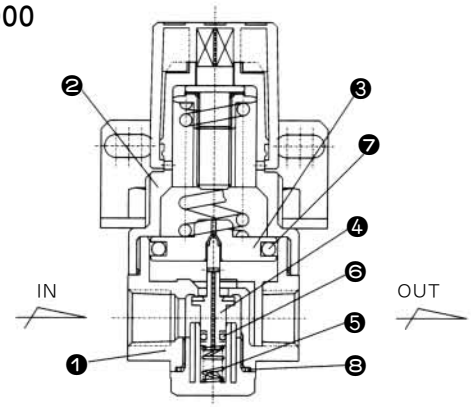

PR3000 · 4000

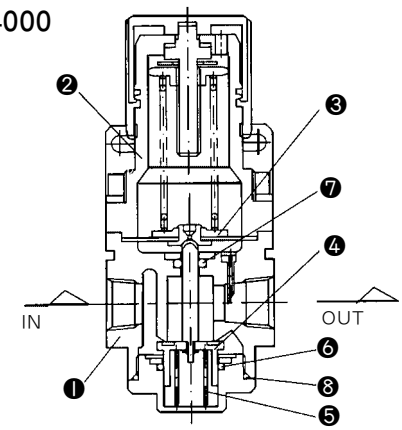

Main Parts

No.	Name	Material			Note
		PR2000	PR3000	PR4000	
❶	Body	Aluminum Die Cast			Baked Enamel Paint
❷	Bonnet	Polyacetal Aluminum Die Cast			Black Paint

Parts List

No.	Parts Name	Material	Part No.		
			PR2000	PR3000	PR4000
❸	Diaphragm Ass'y ※	NBR	PR2000-13-6035	TAR3000-13A-6005	TAR4000-13-6001
❹	Valve Ass'y	Brass · NBR	PR2000-10-6035	TAR3000-10A-6005	TAR4000-10-6001
❺	Valve Spring	Stainless Steel	PR2000-17-6035	TAR3000-17-6005	TAR4000-17-6001
❻	Valve O-ring	NBR	PR2000-07-6034	P-14	TAR4000-07-6001
❼	O-ring	NBR	-	TAR4000-04-6001	TAR4000-04-6001
❽	O-ring	NBR	CA63-1608	TAR3000-27-6005	TAR4000-27-6001

※ PR2000 Piston Type.

Setting

① The adjustment knob is the locking type. Pull the knob away from the body until an orange band is visible. Adjust as necessary and push the knob back into its locked position to prevent accidental setting change.

② Turning the adjustment knob clockwise increases the pressure and turning the knob counter clockwise will reduce the pressure.

③ Check supply pressure before adjusting pressure.

Precautions

① Flush piping before installation.

② Install with at least 60mm of free space below the unit to allow easy access.

Construction/Ports LIST

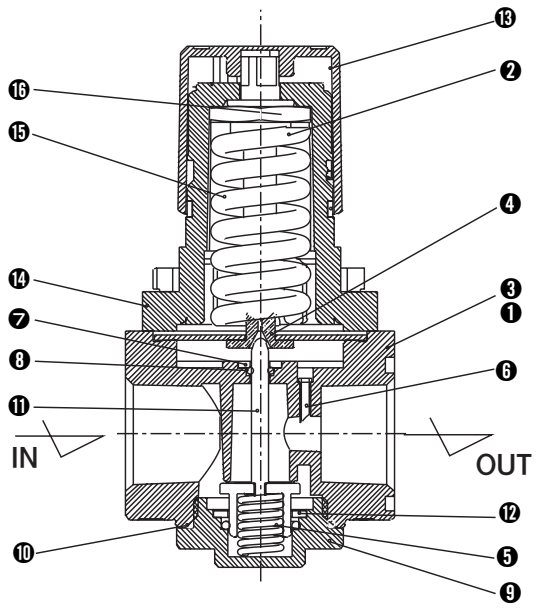

Main Part/Parts List

NO.	Name	Material	Note
❶	Body	Aluminum Die Cast	
❷	Adjust Spring	PW	
❸	Pressure Plug	-	
❹	Diaphragm Ass' y	-	
❺	Valve Spring	Stainless	
❻	Stick PressureTube	ABS	
❼	Valve O-Ring	Aluminum Die Cast	
❽	Valve O-Ring	NBR	
❾	Valve Guide	Zinc Die Cast	
❿	Valve Guide O-Ring	NBR	
⓫	Valve Ass' y	-	
⓬	Valve O-Ring	Aluminum Die Cast	
⓭	Handle	ABS	
⓮	Bonnet	Aluminum Die Cast	
⓯	Adjust Nut	-	
⓰	Adjust Bolt	-	

Dimensions

(mm)

PR5000

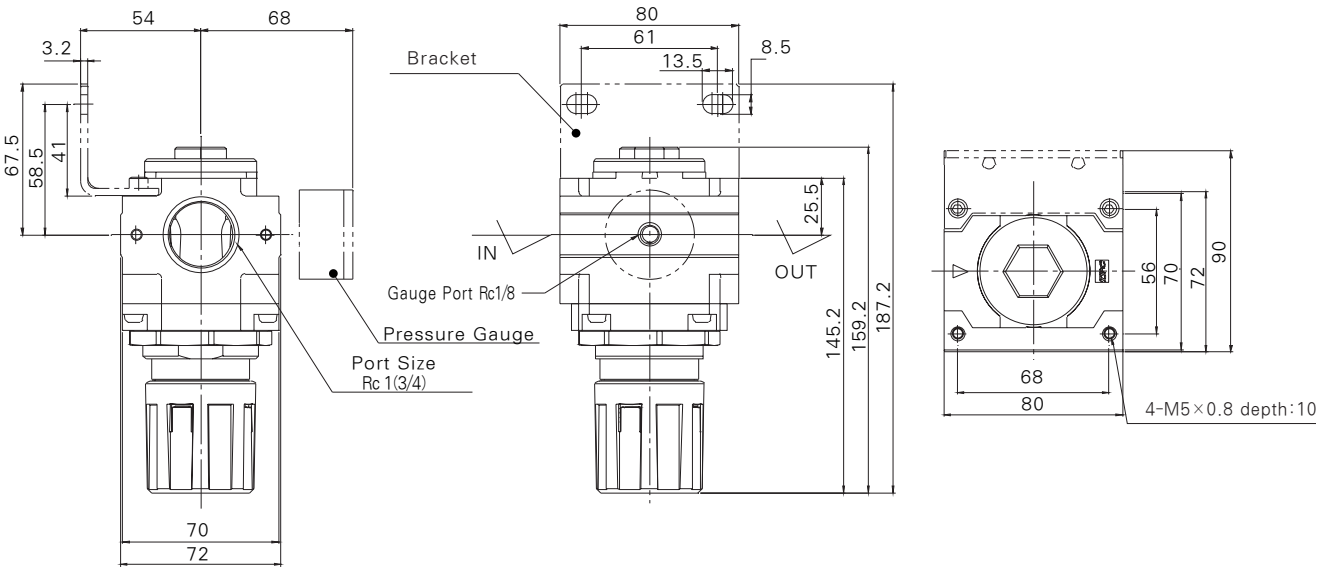

Dimensions

(mm)

PR2000

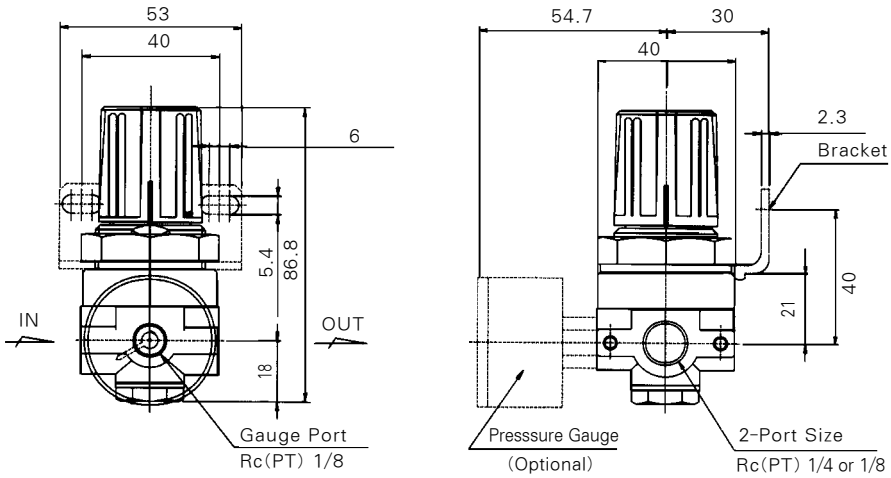

Dimensions

(mm)

PR3000 • 4000

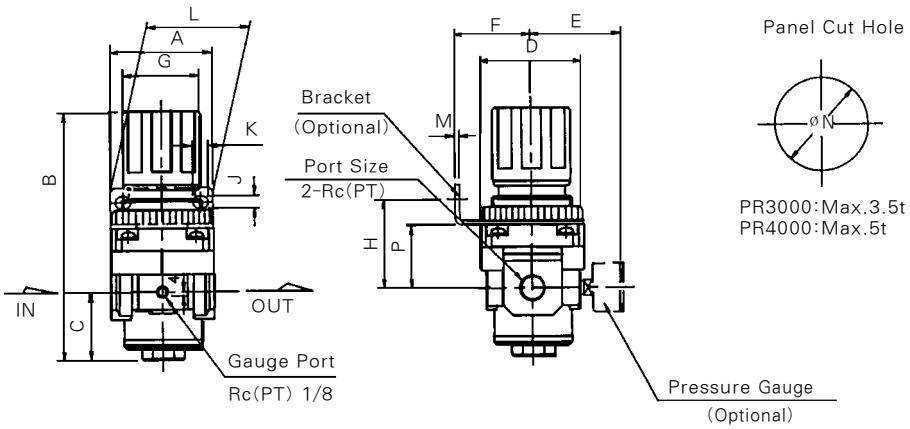

(mm)

Model	Port Size Rc(PT)	A	B	C	D	E	F	G	H	J	K	L	H	M	øN	P
PR3000	1/4 · 3/8	53	124	35	53	61.5	41	40	46	6.5	8	53	2.3	2.3	42.5	32.5
PR4000	3/8 · 1/2	70	149.5	37.5	70	65.5	50	54	54	8.5	10.5	70	2.3	2.3	52.5	30

Series PL 2000 • 3000 • 4000 • 5000

Lubricator

Accessory(Optional)

Name	Part No.			
	PL2000	PL3000	PL4000	PL5000
Bracket	PF 2000 -43-6034	TAF 3000 -43-6034	TAC 4000 -08-6003	PC 5000 -08-6075

Symbol

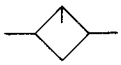

How to Order

PL 30 00 — 03 B — ○

1 2 3 4 5

1 Lubricator

2 Body Size
- 20 : 1/4
- 30 : 3/8
- 40 : 1/2
- 50 : 1

3 Port Size
- 01 : Rc(PT) 1/8
- 02 : Rc(PT) 1/4
- 03 : Rc(PT) 3/8
- 04 : Rc(PT) 1/2
- 06 : Rc(PT) 3/4
- 10 : Rc(PT) 1

4 Accessory
- B : Bracket

5 Special Option
- Blank : Standard Type
- XC16 : Copper-free
- C : Metal guide
  (C is basic to PL4000, PL5000)

Specifications

Model	PL2000	PL3000	PL4000	PL5000
Port Size Rc(PT)	1/8, 1/4	1/4, 3/8	3/8, 1/2	3/4, 1
Max. Supply Pressure	15kgf/㎠ {1.5 MPa}			
Max. Operating Pressure	9.9kgf/㎠ {990 kpa}			
Min Operating Flow Nℓ/min※	1/8 : 15 1/4 : 30	1/4 : 30 3/8 : 40	3/8 : 40 1/2 : 50	3/4 : 120 1: 220
Bowl Capacity (㎤)	20	37	100	135
Recommended Oil	Turbine oil ISO VG32			
Ambient and Media Temperature	5~60℃			
Bowl Material	Polycarbonate			
Weight (kgf)	0.21	0.28	0.52	0.84

※Conditions:Supply pressure 5 kgf/㎠, Number of drop 5 drops/min, ISO VG32, 20℃

Precautions

Atmosphere

Polycarbonate bowls may be damaged and possibly fail if exposed to synthetic oils, thinner solvents, trichlorethylene, kerosene and other aromatic hydrocarbons.

Refill

A minimum air flow is requied for proper operation. (See specifications)
Please ensure the minimum requirements will be met.

Construction/Parts List

PL2000 PL3000 PL4000 / PL5000

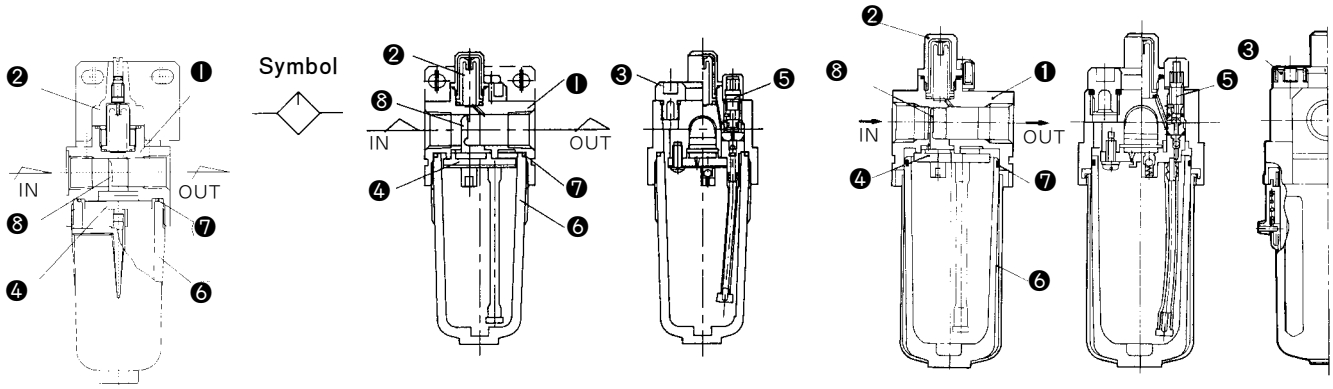

Main Parts

No.	Name	PL Material		Note
		PL2000	PL3000 · PL4000	
❶	Body	Zinc die cast	Aluminum Die Cast	Baked Enamel Paint

Parts List

No.	Name	Material	Part No.		
			PL2000	PL3000	PL4000
❷	Sight Dome Ass' y	Polycarbonate	PL2000-02-6036	TAL4000-20A-6002	TAL4000-20A-6002
❸	Filter Cup Ass' y	–	PL2000-18-6036	TAL3000-18A-6006	TAL4000-18A-6002
❹	Damper Guide Ass' y	–	PL2000-08A-6036	TAL3000-08A-6006	TAL4000-08A-6002
❺	Needle Valve Ass' y	–	PL2000-03-6036	TAL4000-03A-6002	TAL4000-03A-6002
❻	Bowl Ass' y	–	PF2000-07A-6034	TAL3000-07A-6006	TAL4000-31A-6002
❼	O-ring	NBR	PL2000-08-6036	TAF3000-08-6004	TAF4000-08A-6000
❽	Damper	Synthetic Resin	01 : PL2000-14A-6036 02 : PL2000-14B-6036	02 : PL3000-14A-6006 03 : PL3000-14-6006	PL4000-14-6002

※ Note) Bowl assemblies of PL 4000 are fitted with bowl guard(spc).

Flow Characteristics

(mm)

PL2000

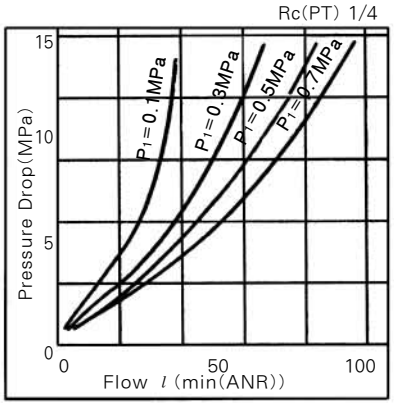

PL3000

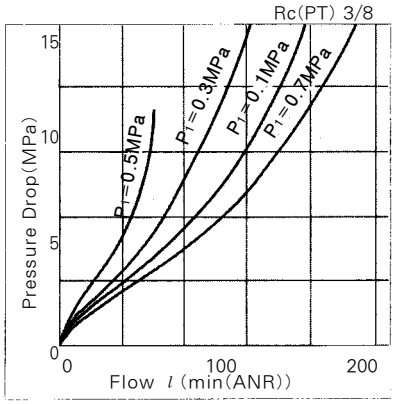

PL4000

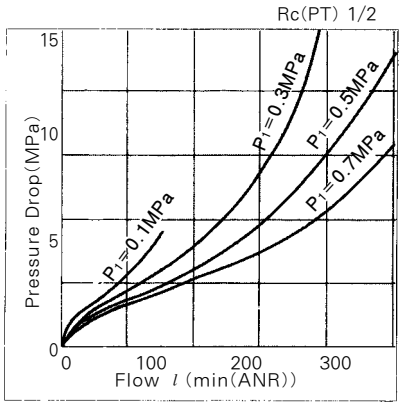

PL5000

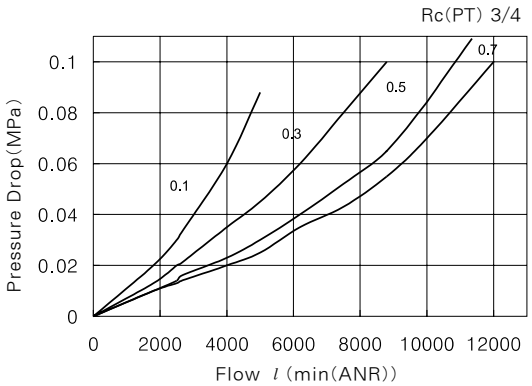

PL5000

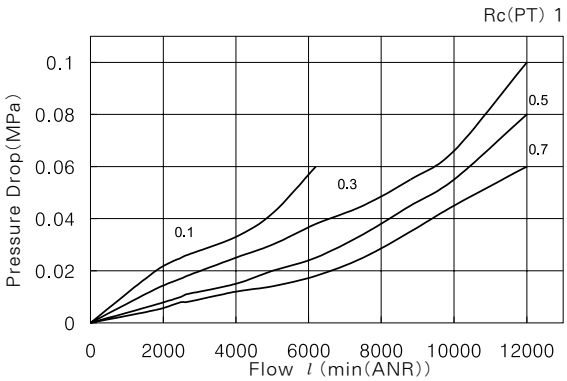

Dimensions

(mm)

PL2000

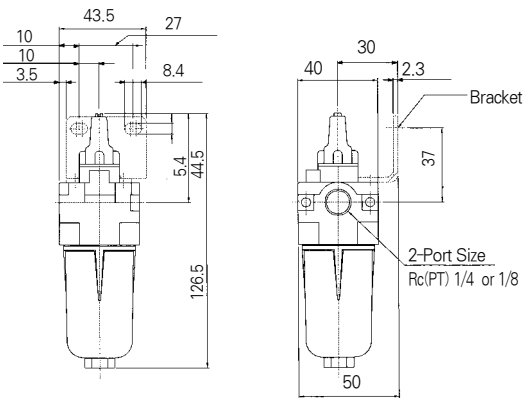

Dimensions

PL3000

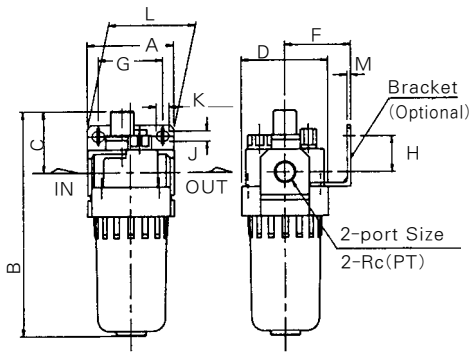

PL4000

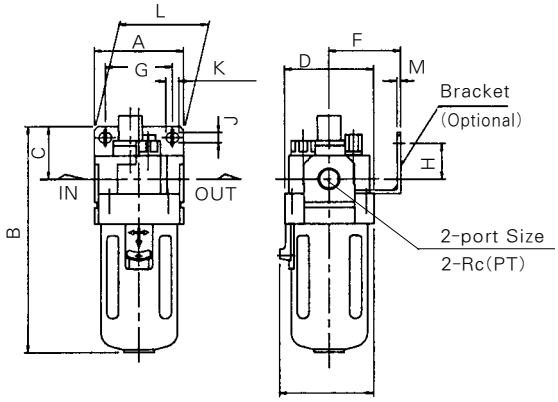

(mm)

Model	Port Size Rc(PT)	A	B	C	D	F	G	H	J	K	L	M	P
PL3000	1/4 · 3/8	53	141	38	53	41	40	23	6.5	8	53	2.3	-
PL4000	3/8 · 1/2	70	177	41	70	50	54	26	8.5	10.5	70	2.3	73

Dimensions

PL5000

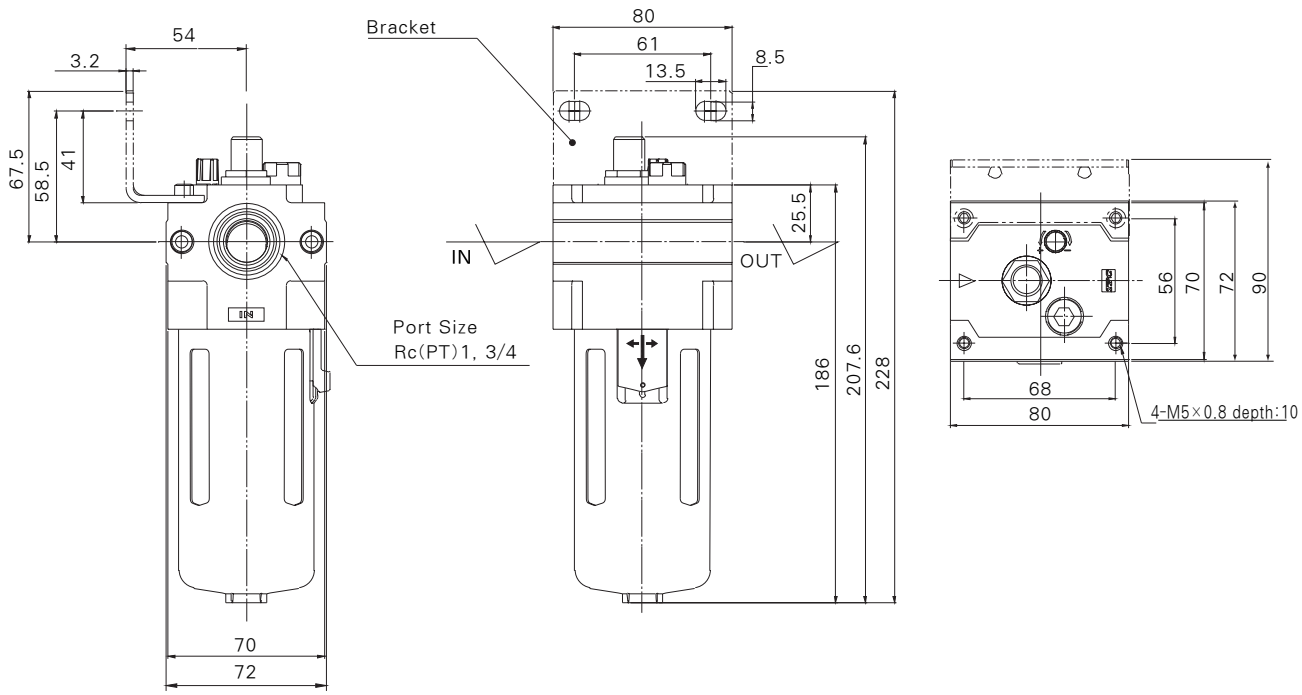

Series PW 2000 • 3000 • 4000 • 5000

Filter Regulator

Accessory(Optional)

Name		Part No.			
		PW2000	PW3000	PW4000	PW5000
Bracket		PR2000-43-6005	TAR3000-43-6005	TAC4000-09-6003	TAC4000-09-6003
Pressure Gauge		TAR4000-16-6001			
※Float Type Auto Drain	N·O	※※PF2000-01A-6039	※TAF3000-01A-6008	※TAF4000-01A-6009	※PF5000-01A-6071

※ Min. operating pressure:N·O-9.9kgf/㎠ (Float Type)
※※ Differential Pressure Type

Symbol

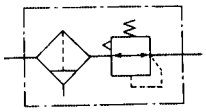

How to Order

PW 30 00 — 03 BG —

1 2 3 4 5

1 Filter Regulator

2 Body Size
- 20 : 1/4
- 30 : 3/8
- 40 : 1/2
- 50 : 1

3 Port Size
- 01 : Rc(PT) 1/8
- 02 : Rc(PT) 1/4
- 03 : Rc(PT) 3/8
- 04 : Rc(PT) 1/2
- 06 : Rc(PT) 3/4
- 10: Rc(PT) 1

4 Accessory
- B : Bracket
- D : Auto Drain:Float Type(N.O)
- ※ PW2000 : Differential Pressure Type
- G : Pressure Gauge

5 Special Option
- Blank : Standard Type
- XC16 : Copper-free
- C : Metal guide
  (C is basic to PW4000, 5000)

Specifications

Model	PW2000	PW3000	PW4000	PW5000
Port size Rc(PT)	1/8, 1/4	1/4, 3/8	3/8, 1/2	3/4, 1
Max. Supply Pressure	15kgf/cm^2 {1.5KPa}			
Max. Operating Pressure	9.9kgf/cm^2 {990KPa}			
Regulating Range	0.5~8.5kgf/cm^2 {50~850KPa}			
Port size for Pressure Gauge	Rc(PT) 1/8			
Ambient and Media Temperature	5~60°C			
Filtration	Standard : 10㎛			
Bowl Capacity (㎤)	8	23	45	80
Bowl Material	Polycarbonate			
Construction/Regulator	Relieving Type			
Weight kgf	0.3	0.56	1.15	1.41

Flow Characteristics

※ Operating Pressure : 7 kgf/㎠

PW2000

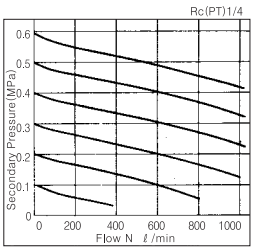

PW3000

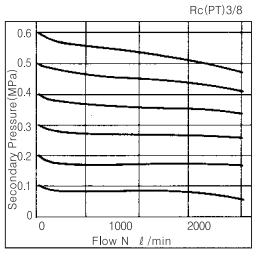

PW4000

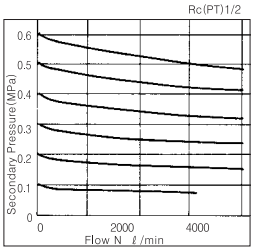

PW5000

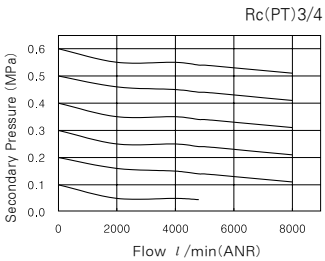

PW5000

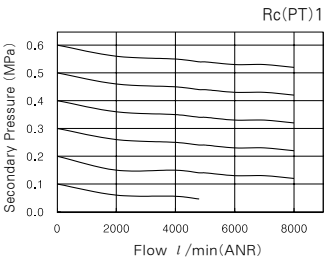

Pressure Characteristics

※ Operating Pressure : 7 kgf/㎠
Secondary Pressure : 2 kgf/㎠
Flow : 20 Nl/min

PW2000

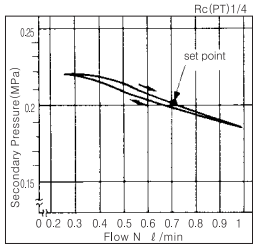

PW3000

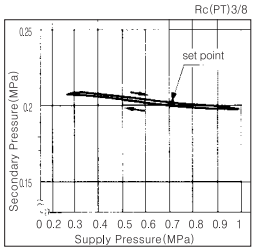

PW4000

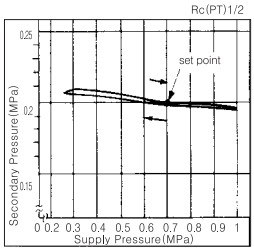

PW5000

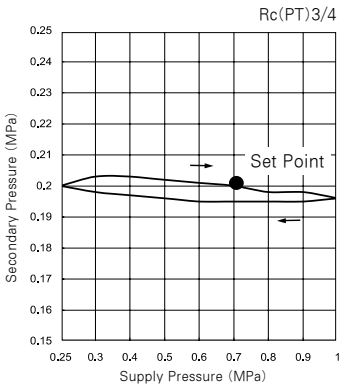

PW5000

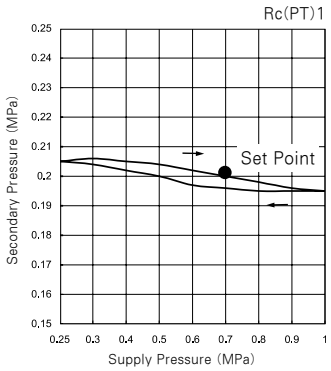

Construction/Parts List

Symbol

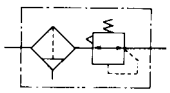

PW2000

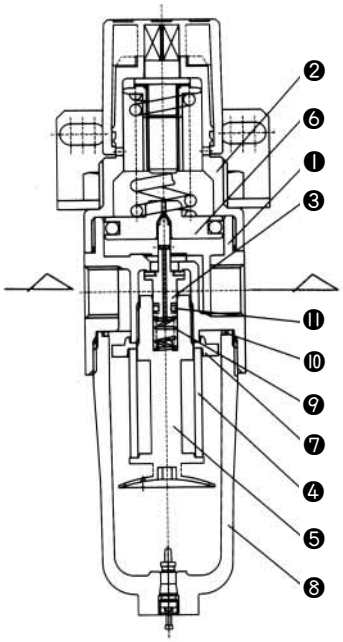

PW3000

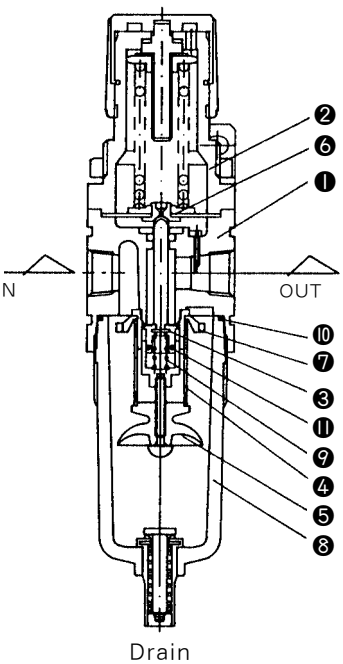

PW4000 / PW5000

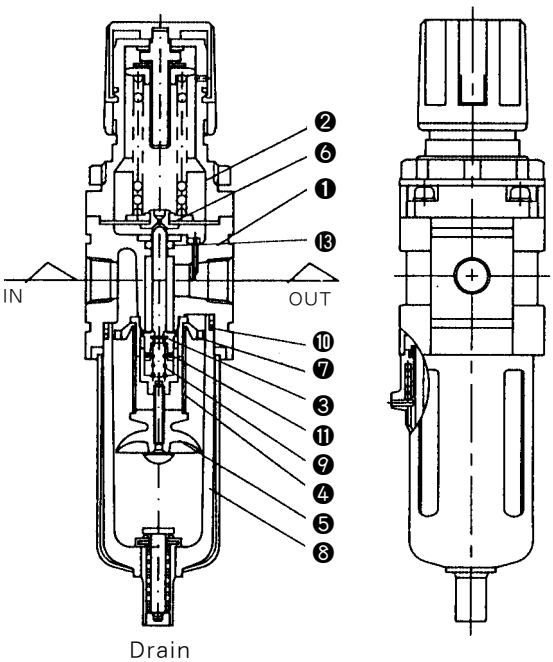

Main Parts

No.	Name	Material			Note
		PW2000	PW3000	PW4000	
❶	Body	Zinc die casting	Aluminum Die Cast		Baked Enamel Paint
❷	Bonnet	Polyacetal	Polyacetal	Aluminum Die Cast	Black Paint

Parts List

No.	Parts Name	Material	Part No.		
			PW2000	PW3000	PW4000
❸	Valve Ass'y	Brass · NBR	PR2000-10-6035	TAW3000-10A-6009	TAW4000-10A-6010
❹	Filter Element	Bronze	PF2000-05-6034	TAF3000-05-6004	TAF4000-05-6000
❺	Baffle	ABS	PF2000-06-6034	TAF3000-06-6004	TAF4000-06-6000
❻	Diaphragm Ass'y※※	NBR	PR2000-13-6035	TAR3000-13-6005	TAR4000-13-6001
❼	Deflector	ABS	PF2000-04-6034	TAF3000-04-6004	TAF4000-04-6000
❽	Bowl Ass'y	Polycarbonate	PF2000-07-6034	TAF3000-07-6004	TAF4000-07-6000
❾	Valve Spring	Stainless Steel	PR2000-17-6035	TAW3000-18-6009	TAW4000-18-6010
❿	Case O-ring	NBR	PF2000-08-6035	TAF3000-08-6004	TAF4000-08-6000
⓫	Valve O-ring	NBR	PW2000-23-6034	TAW3000-23-6009	TAW4000-23-6010
⓭	O-ring	NBR	NO	TAR4000-04-6001	TAR4000-04-6001

※ Note) Bowl assemblies of PW4000 are fitted with bowl guard(SPC).
※※ PW2000 Piston Type

Construction / Parts List

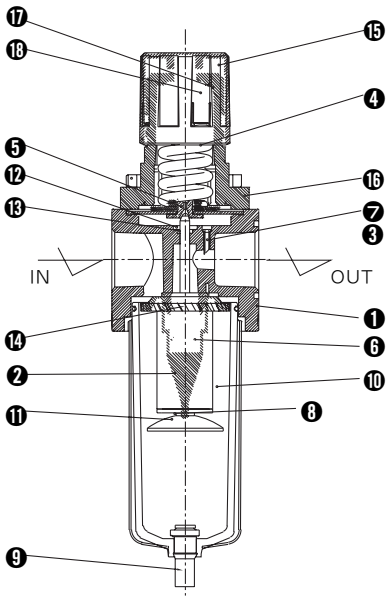

Main Parte / Pant List

NO.	Name	Material	Note
❶	Body	Aluminum Die Cast	
❷	Deflector	POM	
❸	Pressure Plug	-	
❹	Adjust Spring	PW	
❺	Diaphram ASS' Y	-	
❻	Valve Spring	Stainless Steel	
❼	Tube	ABS	
❽	Bowl ASS' Y	-	
❾	Drain ASS' Y	-	
❿	Element	Synthetic Resin	
⓫	Baffle	ABS	
⓬	Holder	Aluminum Die Cast	
⓭	O-ring		
⓮	Valve ASS' Y	-	
⓯	Handle	ABS	
⓰	Bonnet	Aluminum Die Cast	
⓱	Adjust Nut	-	
⓲	Adjust Bolt	-	

Dimensions

(mm)

PW5000

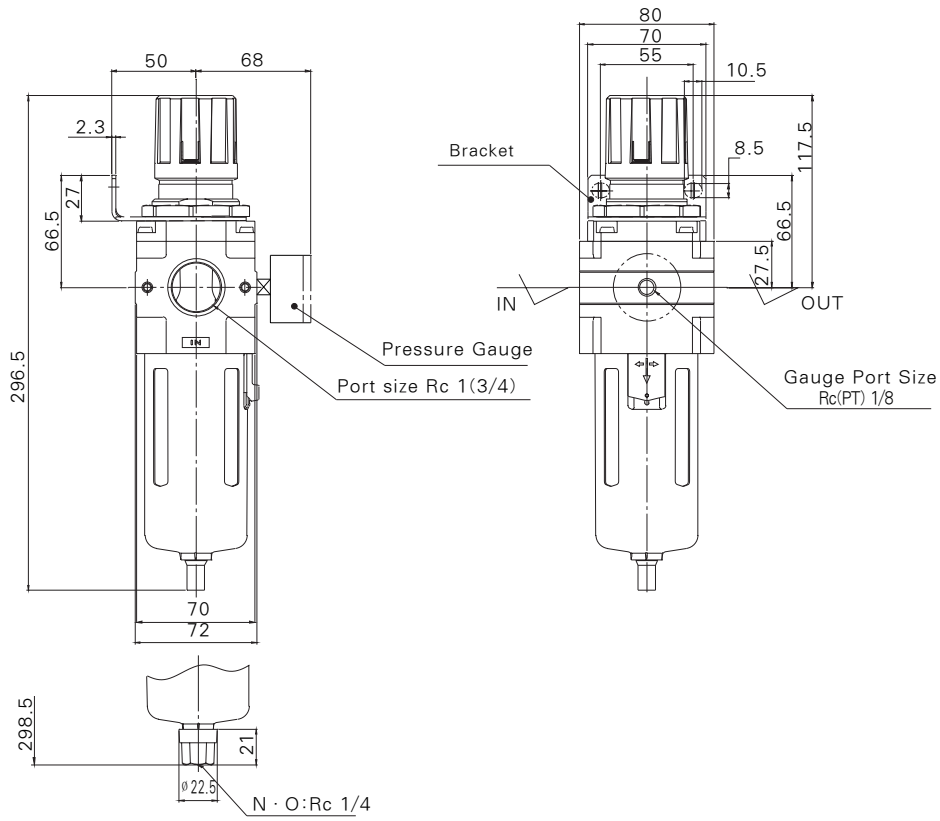

Auto Drain Type

Precautions

Setting

① The adjustment knob is a locking type. Pull the knob away from the body until an orange band is visible. Adjust as necessary and push the knob back into its locked position to prevent accidental setting change.

② Clockwise rotation of the knob results in a pressure increase, Counter clockwise result in a decrease in pressure.

③ Check supply pressure before adjusting pressure.

Installation

① Flush piping before installation.

② Use of the piping adaptors will be ease installation.

Atmosphere

① Polycarbonate bowls may be damaged and could fail if exposed to synthetic oils, thinner solvents, trichlorethylene, kerosene and other aromatic hydrocarbons.

Auto Drain

Float type(Normally Open)

① Drain line should be 8mm or more and should be less than 5m. Be sure not to have any upward turns in the drain line which would prevent drainage.

② Unsuitable for flow below 100Nℓ/min

③ Min. operating pressure 1㎏f/㎠

Dimensions

(mm)

PW2000

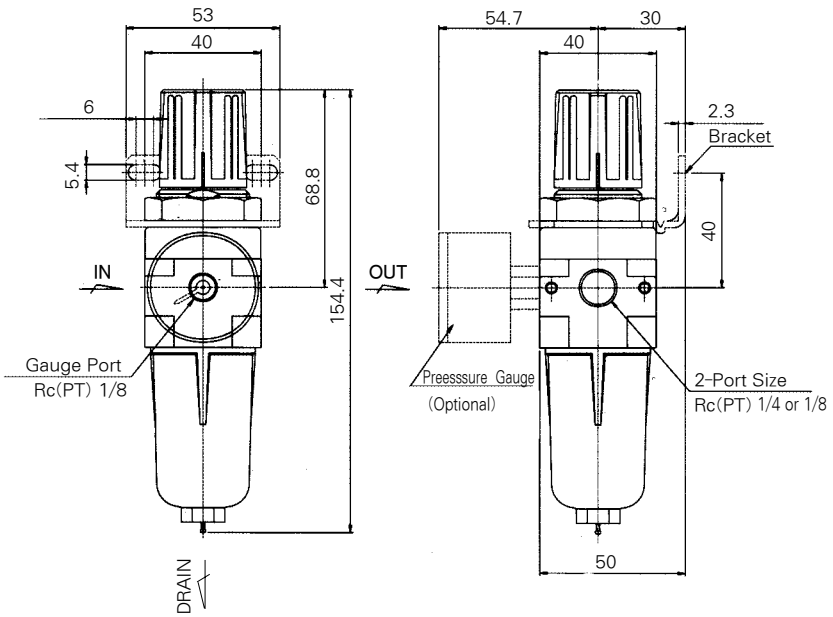

Auto Drain Type

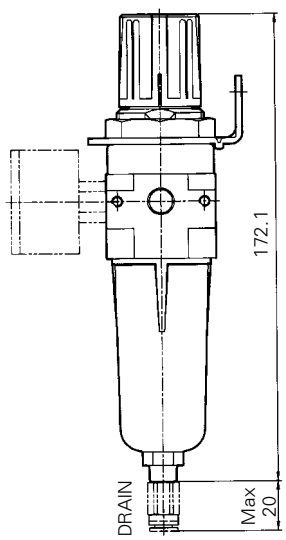

Dimensions

(mm)

PW3000

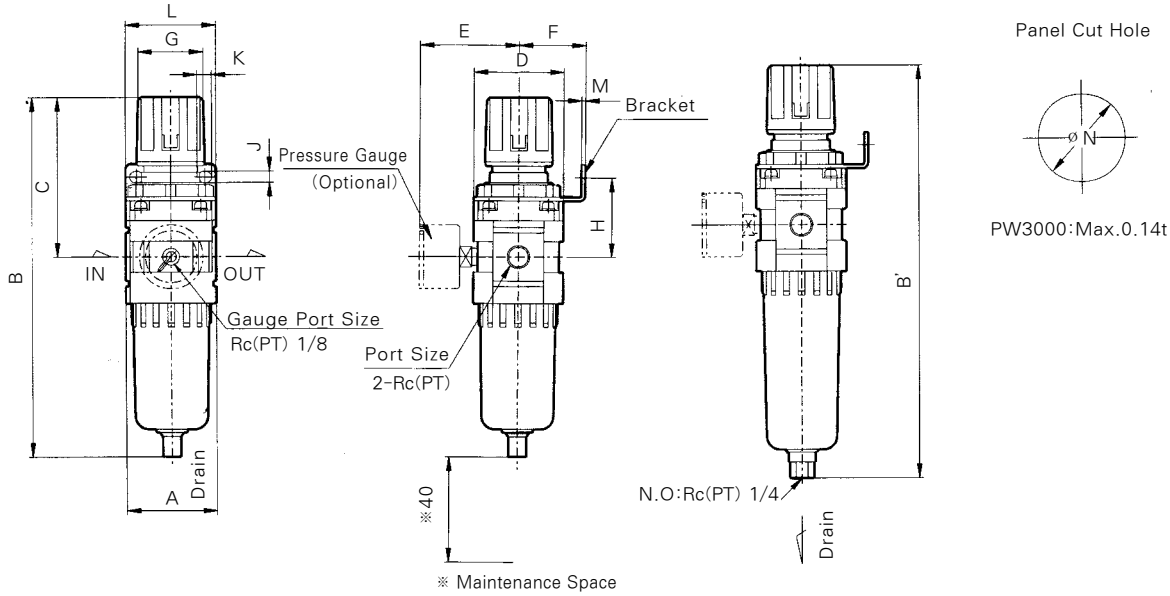

With Auto Drain (Float type)

PW4000

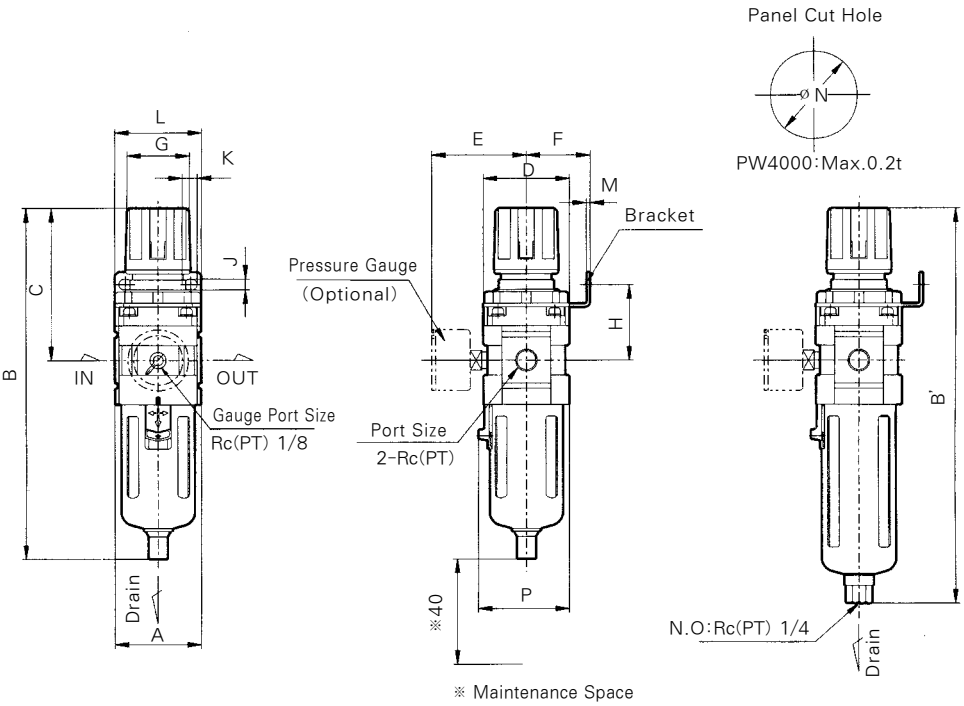

With Auto Drain(Float Type)

(mm)

Model	Port Size RC(PT)	A	B	C	D	E	Mounting Bracket							ø N	P	With Auto Drain Float Type N.O B'
							F	G	H	J	K	L	M			
PW3000	1/4 · 3/8	53	211	92.5	53	61.5	41	40	46	6.5	8	53	2.3	42.5	–	234
PW4000	3/8 · 1/2	70	266	112	70	68	50	54	54	8.5	10.5	70	2.3	52.5	73	287

Spacer

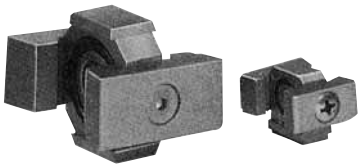

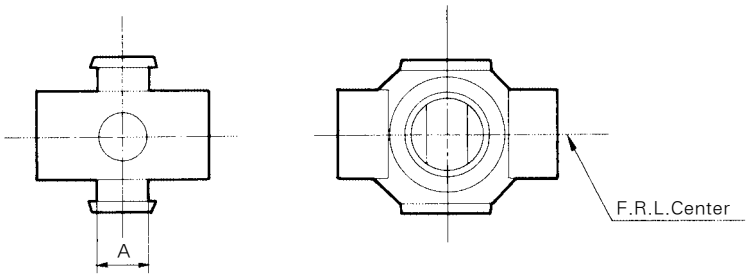

(mm)

Model	A	Applicable Model
Y30	11	PC3000~PC3020
Y40	14	PC4000~PC4020

※PC2000 Series : Spacer No.

Spacer With L-type Bracket

Spacer with L-type bracket

L-type bracket

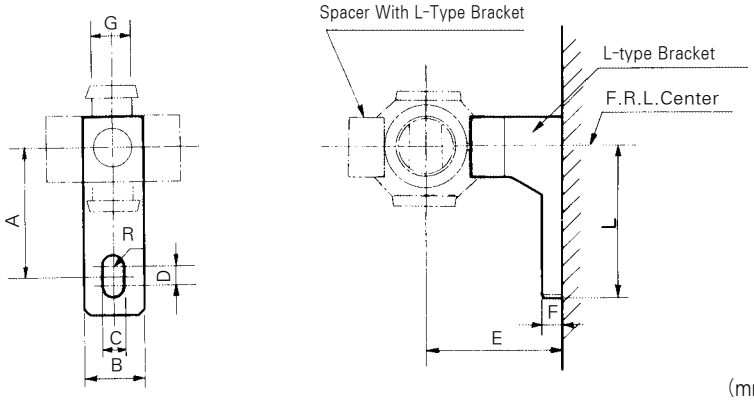

(mm)

L-Type Bracket	Spacer with L-Type Bracket	A	B	C	D	E	F	G	R	L	Applicable Model
TAC3000-06-6007	Y30L	35	16	7	4	41	7	11	3.5	45	PC3000
TAC4000-06-6003	Y40L	40	22	9	4	50	7	14	4.5	50	PC4000

Spacer With T-type Bracket

Spacer With T-Type Bracket

T-Type Bracket

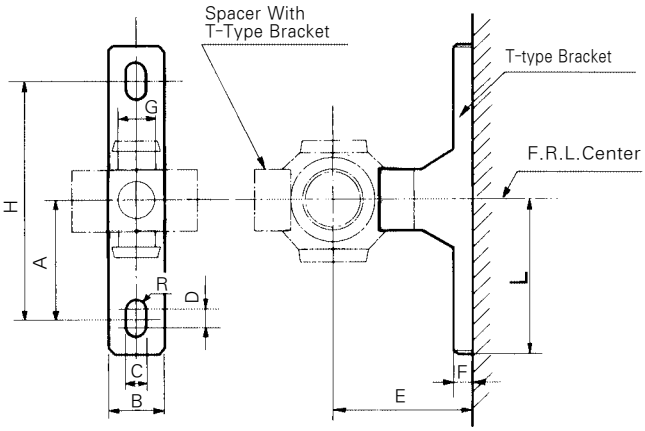

(mm)

L-Type Bracket	Spacer With L-Type Bracket	A	B	C	D	E	F	H	R	L	Applicable model
TAC3000-07-6007	Y30T	35	16	7	3.8	41	7	11	3.5	45	PC3010,3020
TAC4000-07-6003	Y40T	40	22	9	4	50	7	80	4.5	50	PC4010,4020

Bracket For PF · PL

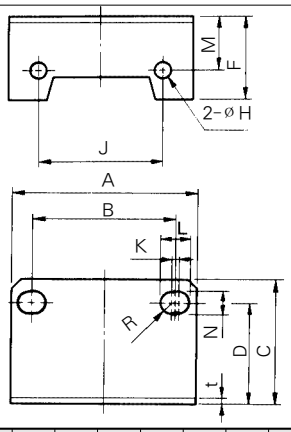

(mm)

Model	A	B	C	D	F	H	J	K	L	M	N	R	t	Mounting Screw (Head cap Screw)	Applicable Model
PF2000-43-6034	40	27	33	27	17.4	4.5	24	3	8.4	14	5.4	2.7	2.3	M4×5 l	PF2000
														M4×8 l	PL2000
TAF3000-43-6004	53	40	39	32	25.5	4.5	35	1.5	8	19	6.5	3.25	2.3	M4×8 l (Hexagon Socket)	PF3000 PL3000
TAC4000-08-6003	70	54	47	38	31.5	5.5	47	2	10.5	20	8.5	4.25	2.3	M5×10 l (Hexagon Socket)	PF4000 PL4000
PC5000-08-6075	80	61	50	41	35	6.5	68	2	13.5	26	8.5	4.25	3.2	M6×1.0×12 l (Hexagon Socket)	PF5000 PL5000 PR5000

Bracket For PR · PW

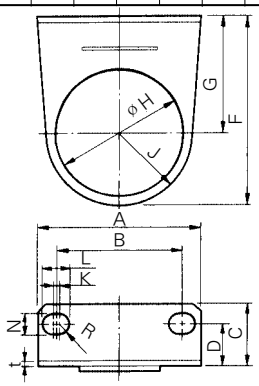

(mm)

Model	A	B	C	D	F	G	øH	J	K	L	N	R	t	Applicable Model
PC2000-43-6035	53	40	25	19	49.5	30	32	19.5	6	11.4	5.4	2.7	2.3	PR2000,PW2000
TARR3000-43-6005	53	40	21	13.5	66	41	42.5	25	1.5	8	6.5	3.25	2.3	PR3000,PW3020
TAC4000-09-6003	70	54	27	18	80	50	52.5	30	2	10.5	8.5	4.25	2.3	PR4000,PW4000
PC5000-08-6075	70	54	27	18	80	50	52.5	30	2	10.5	8.5	4.25	2.3	PR5000,PW5000

Pressure Gauge For PC, PR, PW

PR4000-16-6001

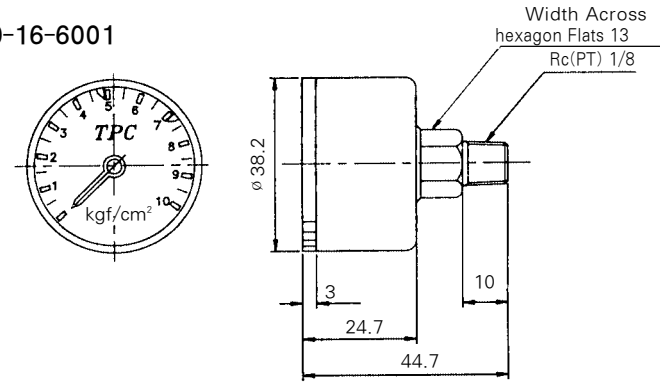

Model	Pressure Range(kgf/㎠)	Applicable Model
TAR4000-16-6001	Max. 10	PC, PR, PW

Coalescing Filter

PFH/PFU series

Model	Port size (PT)	Bowl Capacity(cm²)	Filteration	Symbol
PFH3000	1/4(8A), 3/8(10A)	20	0.3 ㎛	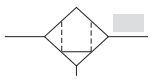 0.3 ㎛
PFU3000			0.01 ㎛	
PFH4000	3/8(10A), 1/2(15A)	45	0.3 ㎛	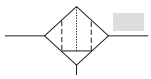 0.01 ㎛
PFU4000			0.01 ㎛	

- Easy to control element
- Removing dust with minute structure element

How to order

PFH 3000 — G 0 B — C

1 2 3 4 5 6

1 CoalescingFilter
- PFH : 0.3㎛
- PFU : 0.01㎛

2 Body size
- 30 : 3/8, 40 : 1/2

3 Type of Port
- Blank : Rc(PT)
- N : NPT
- G : G(PF) PF

4 Port Size
- 01 : Rc(PT) 1/8
- 02 : Rc(PT) 1/4
- 03 : Rc(PT) 3/8
- 04 : Rc(PT) 1/2

5 Parts
- Blank : Standard
- D : Auto drain
- B : Bracket

6 Option
- Blank : Standard
- XC16 : Copper-free
- C : Metal Guide
  (C is basic to PFH(U)4000)

Specification

■ PFH3000/4000

Model	PFH3000	PFH4000
Port size(PT)	1/4, 3/8	3/8, 1/2
Max. Supply Pressure	15kgf/cm² (1.5Mpa)	
Max. Operating Pressure	9.9kgf/cm² (990kpa)	
Ambient and Media Temp	5 ~ 60℃	
Filteration	0.3 ㎛	
Bowl Material	Polycarbonate	
Bowl Capacity(cm²)	20	45
Weight(kgf)	0.29	0.55

■ PFU3000/4000

Model	PFU3000	PFU4000
Port size(PT)	1/4, 3/8	3/8, 1/2
Max. Supply Pressure	15kgf/cm² (1.5Mpa)	
Max. Operating Pressure	9.9kgf/cm² (990kpa)	
Ambient and Media Temp	5 ~ 60℃	
Filteration	0.01 ㎛	
Bowl Material	Polycarbonate	
Bowl Capacity(cm²)	20	45
Weight(kgf)	0.29	0.55

Coalescing Filter Dimensions

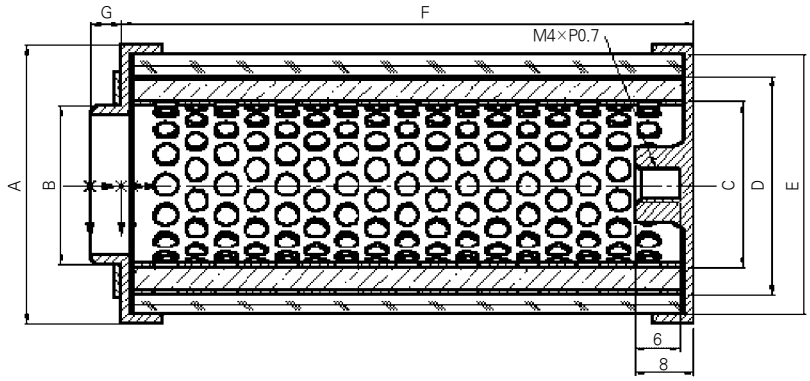

COALESING FILTER ELEMENT SPEC.

Model	A	B	C	D	E	F	G	note
PFH/U3000	ø30	ø16.5	ø18.5	ø24.6	ø27.5	44	4	
PFH/U4000	ø37	ø21	ø21	ø32	ø34.5	67	4	

Structure

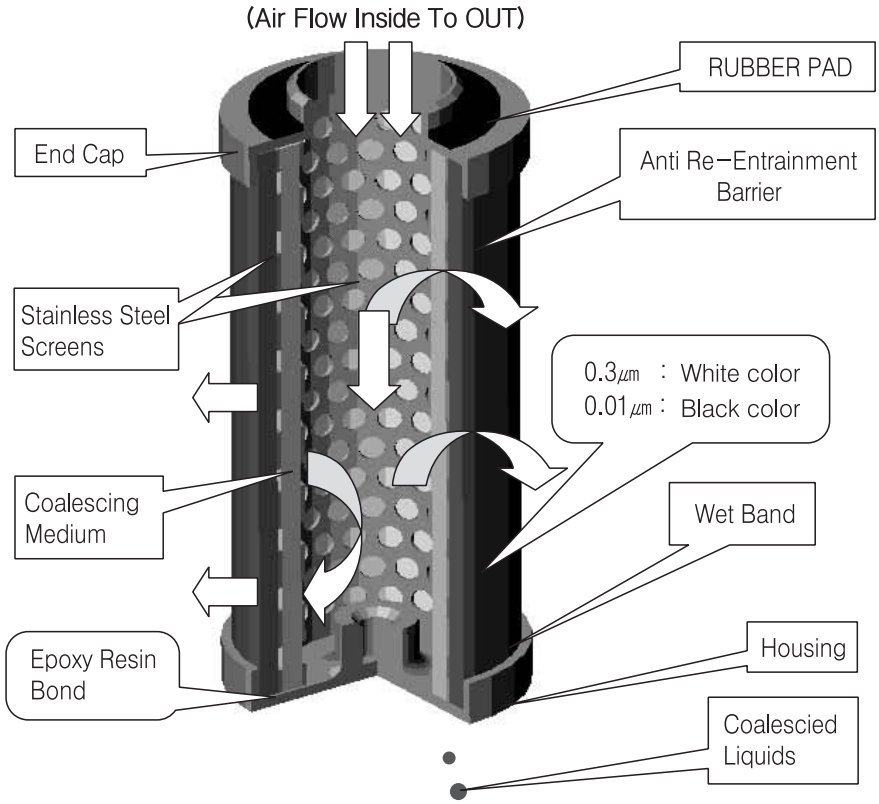

Parts List

Name \ Model		Parts No.	
		PFH/PFU3000	PFH/PFU4000
Bracket		TAF3000-43-6004	TAC4000-08-6003
※ Auto Drain	N.O	TAF3000-01A-6008	TAF4000-01A-6009

Flow Characteristics

PFH3000

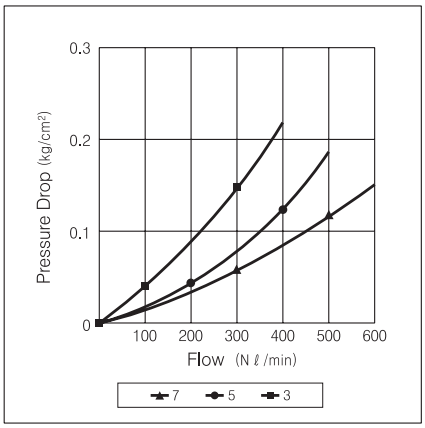

PFU3000

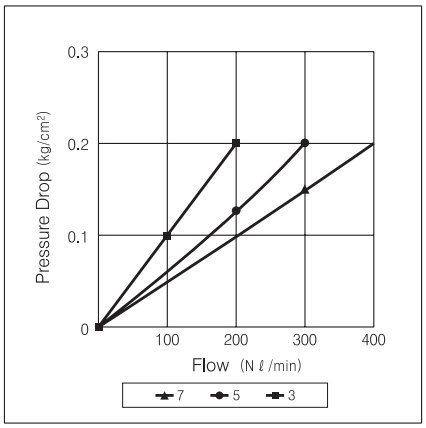

PFH4000

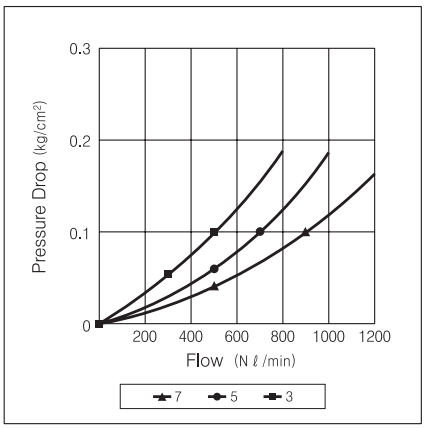

PFU4000

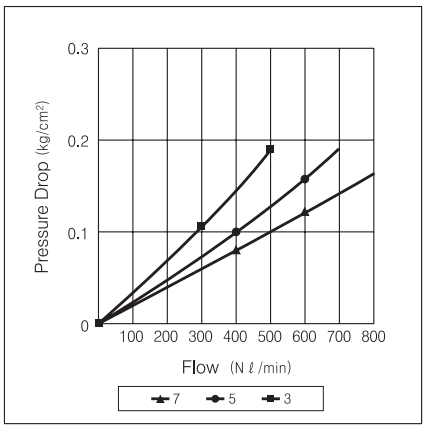

Precautions

Installation

Flush piping before installation.

Atmosphere

Polycarbonate bowls may be damaged and could fail if exposed to synthetic oils, thinner solvents, trichlothylene, kerosene or other aromatic hydrocarbons.

Auto Drain

Float type (normally Open)

① Drain line should be or more and should be less than 5m and be more than ø8 size. Be sure not to have any upward turns in the drain line which would prevent drainage.

② Min. operating compressor 0.75Kw (100N ℓ /min)

③ Min. operating pressure 1kgf/cm²

Construction/Parts List

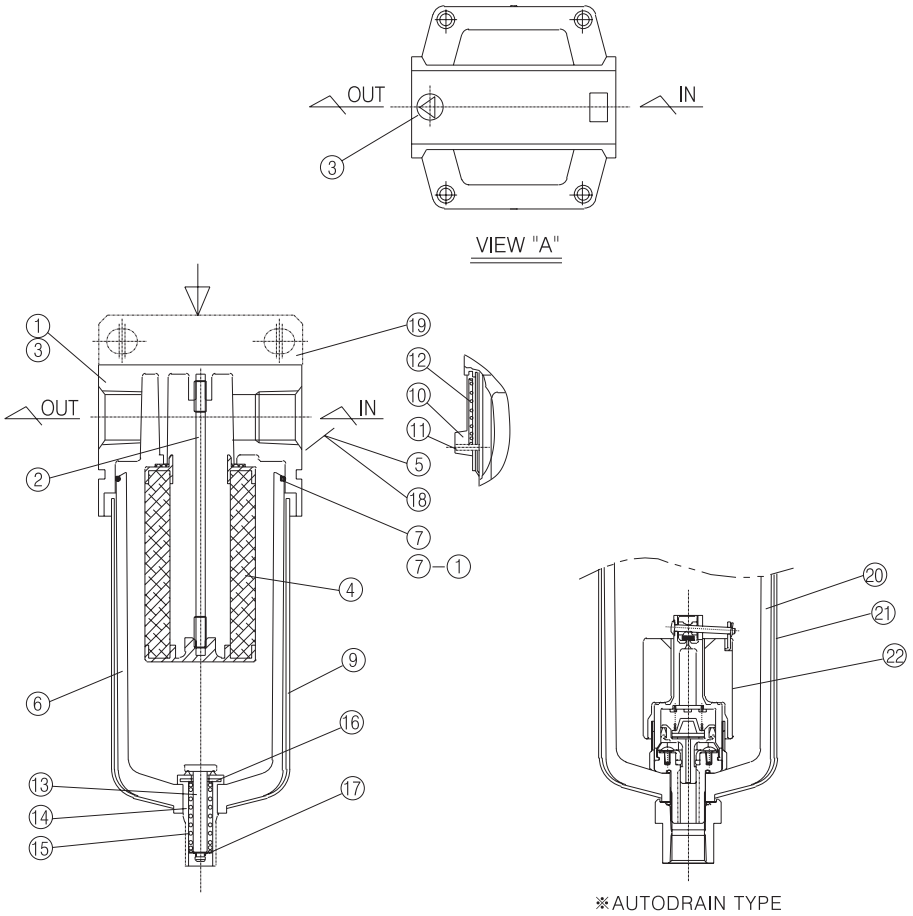

Main Part/Parts List

No.	Name	Material
①	BODY	AL
②	BAFFLE SHAFT	C2700W
③	STICKER(LOGO)	-
④	FILTER ELEMENT	-
⑤	WRENCH BOLT	SCM3
⑥	BOWL	POLYCARBONATE
⑦	BOWL O-RING	NBR
⑧	BOWL O-RING STOPPER	ACETAL
⑨	BOWL GUARD	SBCE
⑩	LOCK BUTTON	ABS
⑪	LOCK BUTTON PIN	ABS

No.	Name	Material
⑫	LOCK BUTTON SPRING	STS WPB
⑬	DRAIN STEM	C3604
⑭	HOUSING	NBR
⑮	DRAIN STEM	STS WPB
⑯	WASHER	BSS
⑰	STOPPER	STS
⑱	NAME PLATE	TETRON
⑲	BRACKET-A	SB
⑳	BOWL(AUTO DRAIN)	POLYCARBONATE
㉑	BOWL GUARD(AUTO DRAIN)	SBCE(SPCE)
㉒	AUTO DRAIN V/V ASS'Y	

Spare Parts / Model No.

No.	Name	Parts. No	
		PFH/U3000	PFH/U4000
④	Filter Element	PFH3000-005A-6081	PFH4000-005A-6083
		PFU3000-005A-6082	PFU4000-005A-6084
⑦	Case O-Ring	TAF3000-08-6004	TAF4000-08-6000
⑦-①	Case Ass'y	TAF3000-07A-6004	TAF4000-07A-6000

Dimensions PFH3000 / PFU3000

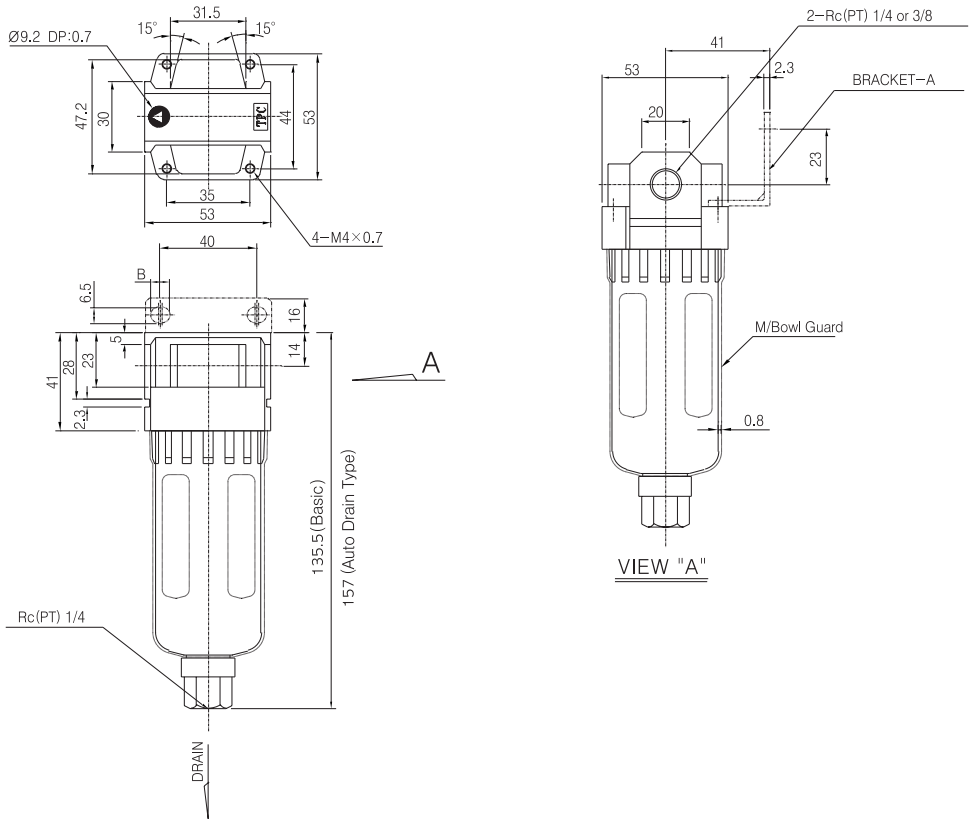

Dimensions PFH4000 / PFU4000

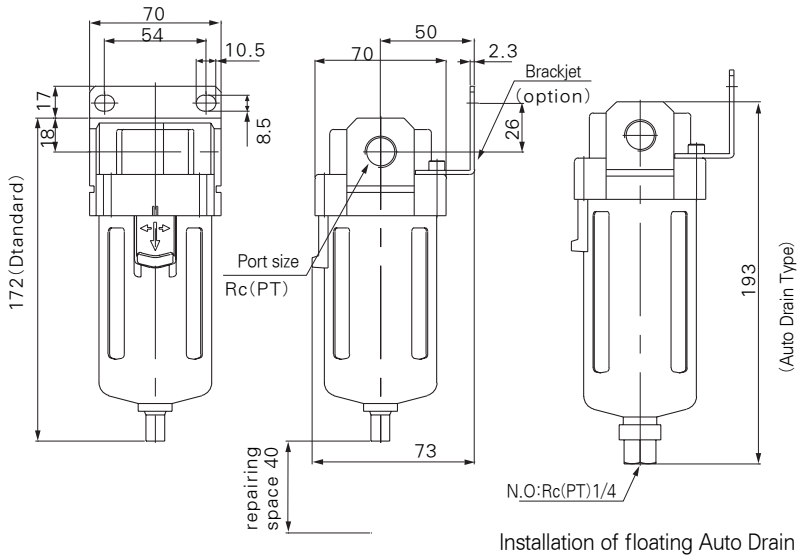

Installation of floating Auto Drain

Pressure Relief 3Port Valve with a Locking Hole

Series SH 2000 · 3000 · 4000 · 5000

- When in the exhaust position, the valve may be padlock secured. Prevents accidental start-ups while personnel are cleaning or servicing equipment.
- Combination with a modular style FRL is possible.
- Easy to operate
- The direction of air flow can be verified at a glance by the orientation of the handle.
- The valve is compact yet provides a large capacity.

Symbol

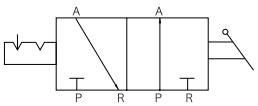

How to Order

SH 2000 – 01 – A

1 2 3 4

1 Pressure Relief 3port Valve (Shut-off Valve)

2 Body Size

2000	1/4
3000	3/8
4000	1/2
5000	1

3 Port size

01 : Rc(PT) 1/8
02 : Rc(PT) 1/4
03 : Rc(PT) 3/8
04 : Rc(PT) 1/2
06 : Rc(PT) 3/4
10 : Rc(PT) 1

4 Accessories

Section	Bracket Format	Applied Type	Application F.R.L	Remarks
A	Y20	SH2000	*PC2000~PC2020	
B	Y30	SH3000	AC3000~AC3020	
C	Y40	SH4000	AC4000~AC4020	
D	-	SH5000	*PC5000~PC5020	Looking Nipple

※ Interface part is required if attached to a modular FRL. (Refer to the table below for the interface part number.)

Bracket Application Accessories for SH2000

Product Number	Bolt and Gasket	Size	Amount	Applied Type	Remarks
Y20	Hexagonal Wrench Bolt	M4×0.7×25	2	PR2000, PW2000, PC2020	Removed the M4×0.7×14 Volt from before
	Hexagonal Wrench Bolt	M4×0.7×65	2	PC2000, PC2010	Removed the M4×0.7×40(42) Volt from before
	Gasket	CA63-1608K	1	All Types	

※ Open and exit signs are the FRL standard and it is standard to connect the shut off valve with the FRL exiting side.
※ The volt number needed for connection is 2EA each, all PC200 type openings and PF2000/PL2000 exits cannot be connected.
※ All PC5000~PC5020 product connections are direct exhaust methods using nipples.

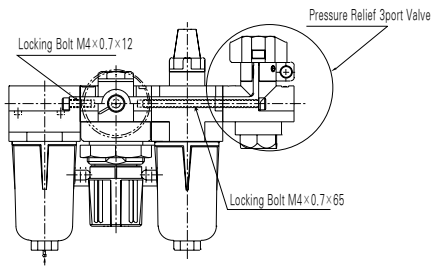

Specifications

Fluid	Air							
Operating Pressure Range	0.1~1.0MPa(1~10.2㎏f/㎠)							
Ambient and Fluid Temperature	5~60℃							
Handle Switching Angle	90°							
IN · OUT Port Body Size Rc(PT)	SH2000		SH3000		SH4000		SH5000	
	1/8	1/4	1/4	3/8	3/8	1/2	3/4	1
Body Size Rc(PT)	1/8		1/4		3/8		1/2	
Eeffective Area(㎟)(Cv)	10(0.59)	14(0.82)	20(1.17)	31(1.82)	38(2.23)	57(3.35)	120(7.1)	140(8.24)
Weight(g)	210		260		380		1,000	

Model

Series	Port Size	Padlock Mounting Position
SH2000	Rc(PT) 1/8, 1/4	Rc(PT) 1/8
SH3000	Rc(PT) 1/4, 3/8	Rc(PT) 1/4
SH4000	Rc(PT) 3/8, 1/2	Rc(PT) 3/8
SH5000	Rc(PT) 3/4, 1	Rc(PT) 1/2

Caution

1. When the handle has stopped in the middle location, it will become the cause for operational errors and air leakages. Therefore, the transition should be quickly dealt with, and be sure to make a certain transition.
2. The → sign port is the 1st side which indicates the opening of the compressed air, the "A" port on the opposite side is the 2nd side. The "R" port perpendicular to this is the exhaust side. Connect after checking. Incorrect exhaustion can become the cause of operational errors.
3. Do not take apart the handle stop screw. Overlooking a screw can bring about operational errors or problems in safety.
4. Only put pressure in the P port. Otherwise it will become the cause for operational errors.
5. Do not use in a buoyant pressure. It will cause of air leakage.
6. When there is much dust around, operate the noise device on the R port. If dust is collected, it can cause air leakages.
7. When laying exhaust pipes on the R port, connect so the valid cross sectional area size exceeds the table below.
   (When the cross sectional area size is below the numbers on the table, it will cause air leakages)

Model	Effective area(㎟)
VHS2500 · 3500	5
VHS4500	8

Construction

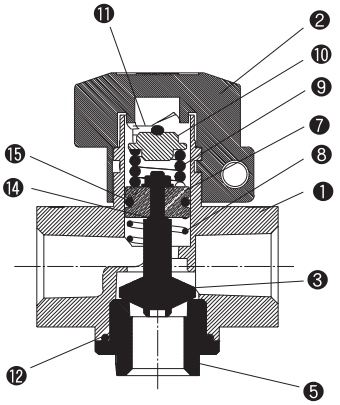

Series SH2000 · 3000 · 4000

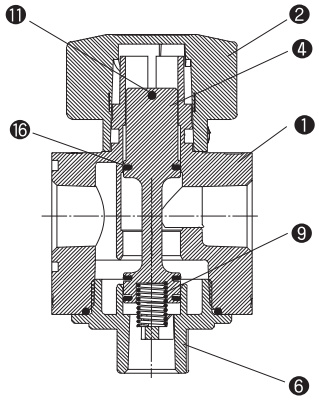

Series SH5000

Cmponent Parts

NO	Description	Material	Note
❶	BODY	ABC	*SH2000 아연합금
❷	HANDLE	Zinc alloy	Chromated
❸	POPPET VALVE	-	
❹	SPOOL	ADC12	Chromated
❺	POPPET VALVE GUIDE	Zinc alloy	Chromated
❻	SPOOL GUIDE	Zinc alloy	Chromated
❼	PISTON	C3604	
❽	POPPET VALVE SPRING	SWP	Chromated
❾	SPRING	SWP	Chromated
❿	SPRING HOLDER	SUM	
⓫	Parallel PIN	SUM	
⓬	POPPET VALVE GUIDE GASKET	NBR	
⓭	SPOOL GUIDE GASKET	NBR	
⓮	POPPET VALVE GASKET	NBR	
⓯	PISTON PACKING	NBR	
⓰	SPOOL PACKING	NBR	

Series SH2000

〈PC2000〉

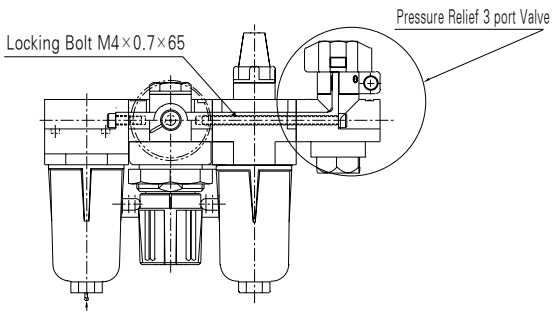

〈PC2020〉

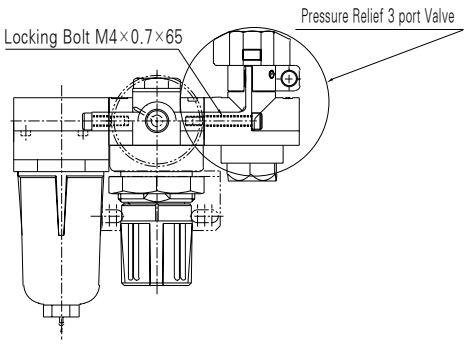

Series SH5000

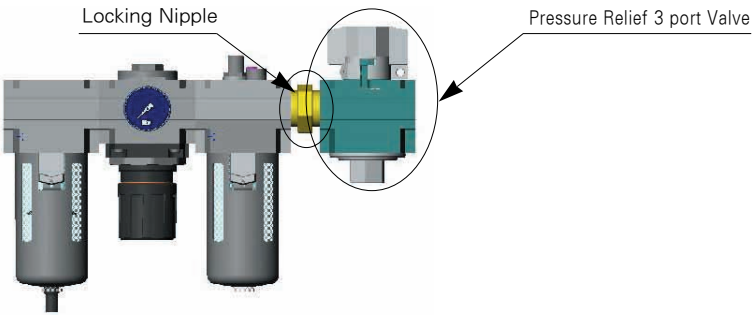

Dimensions

Series SH2000

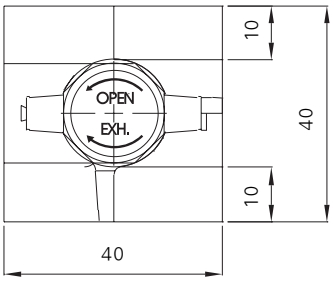

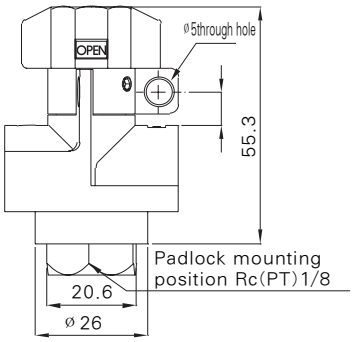

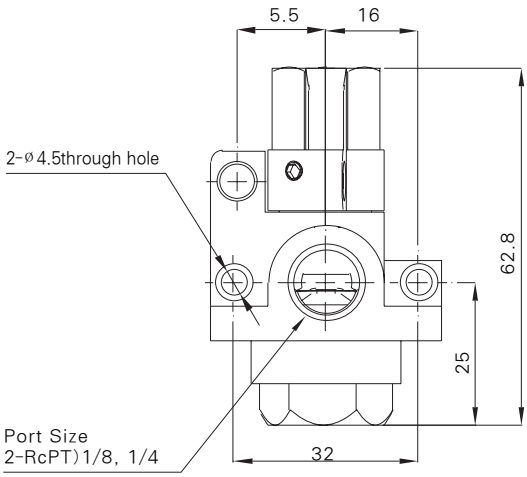

Series SH3000

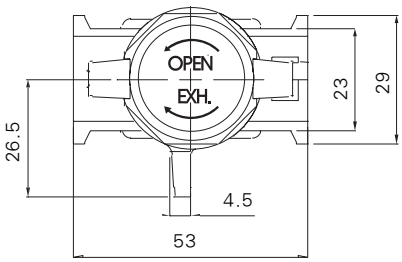

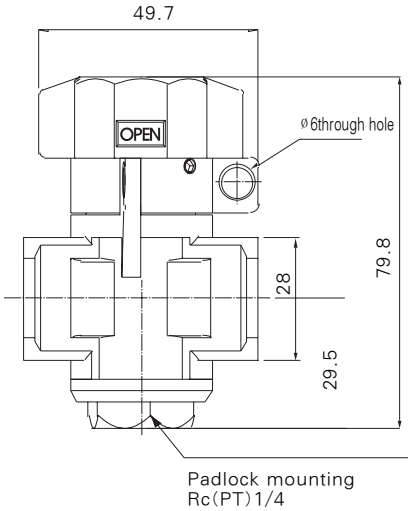

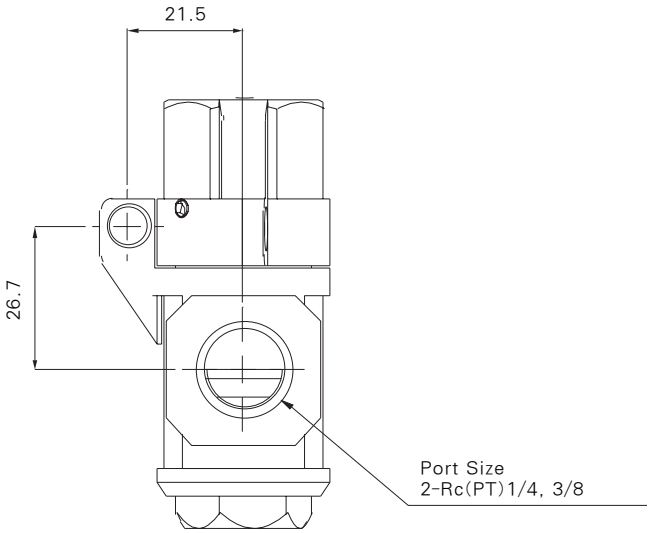

Dimensions

Series SH4000

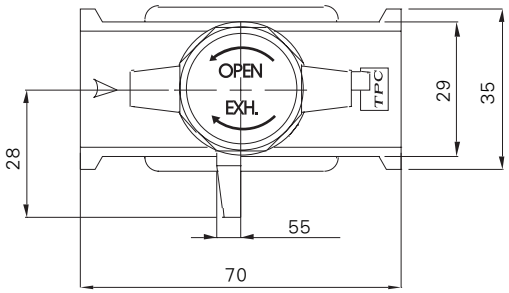

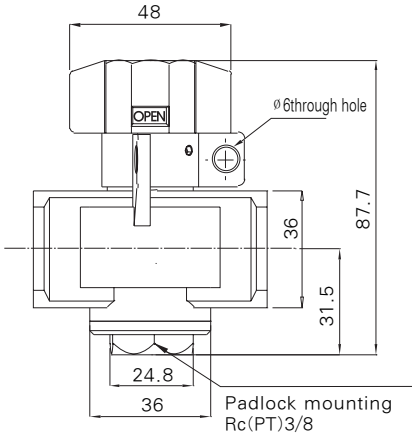

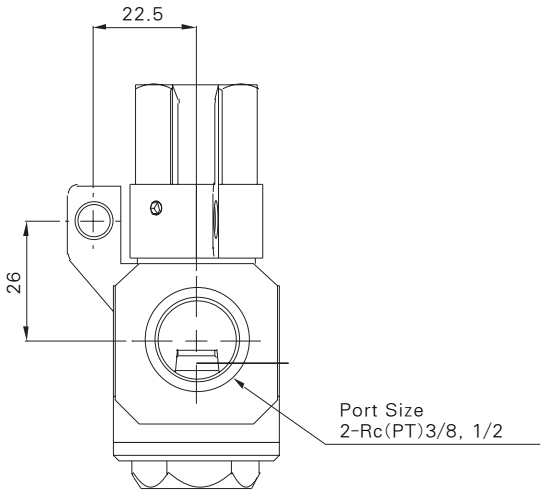

Series SH5000

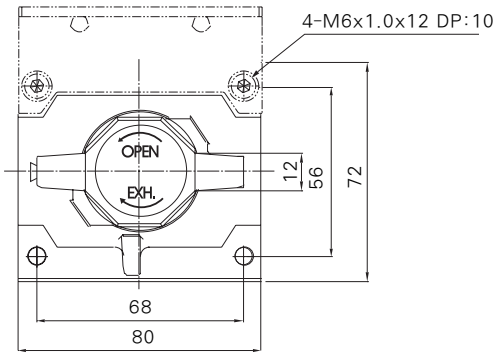

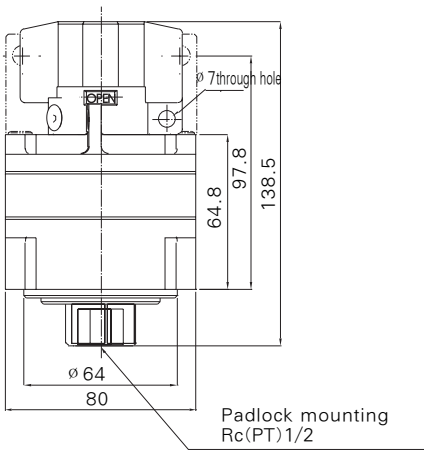

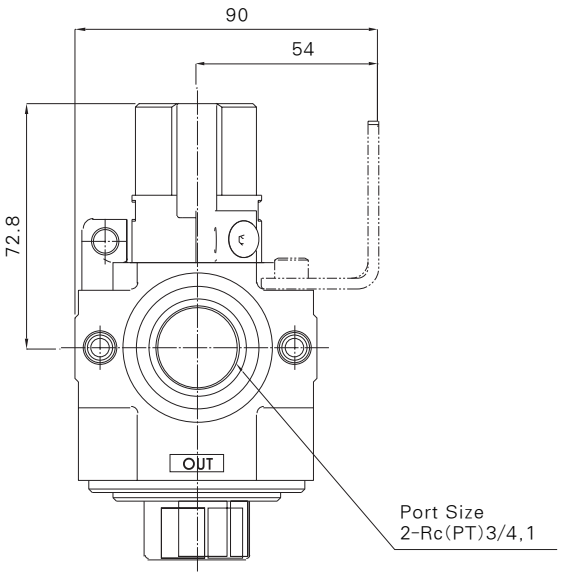

High Performance Air Filter

TDF15A ~ 300A

High Performance Air Filter

- **Eliminates harmful particles in the compressed air**
- **AC-F, Activated carbon adsorbent filters are also available.**
- **Filters designed to work under difficult conditions.**

High efficiency Filter elements offers better protection for your pneumatic equipment by removing oil, water, dirt and particles.

The filters are able to give better protection to your equipment by eliminating oil, moisture and impurities in the main air line.

The compressed air passes through the filter element from the centre of the filters and flow outwards as indicated in the relevant diagrams.

During the filtering process, all kinds of impurities are removed, thereby providing clean air to all your pneumatic equipment, At the same time the impurities drop to the bottom of the filters and drained out via the auto drain valves.

The air filters comprises of three parts : Particulate filter, Coalescing filter and Absorption filter, It's usage will result in higher efficiency and also saves costs.

TD-F type activated carbon absorbent filters are also available for removing smell and the finest oil mist.

How to Order

TDF — 15 A

1 2 3

1 High Performance Filter(TPC Dryer Filter)

2 Element size(TDE)

3 Attachment

Air Filter

15A	20A · 25A	40A · 50A	65A·80A·100A·125A	150A·200A·250A·300A

Specification

Model \ Filter Type		CAPACITY(Nm³/min)				
		Main Filter	Pre Filter	Line Filter	Coalescent	Absorbent
		40㎛	5㎛	1㎛	Filter	Filter
TDF-15A	1/2″ (S)	2.2	1.8	1.2	0.01㎛	0.01ppm
TDF-20A	3/4″ (S)	5.7	3.5	2.8	1.0	1.0
TDF-25A	1″ (S)	8.0	5.7	5.6	1.9	1.9
TDF-40A	1½″ (S)	17.0	14.0	11.0	3.4	3.4
TDF-50A	2″ (S)	29.0	25.0	22.0	10.0	10.0
TDF-65A	2½″ (F)	58.0	50.0	48.0	14.0	14.0
TDF-80A	3″ (F)	88.0	75.0	72.0	28.0	28.0
TDF-100A	4″ (F)	145.0	125.0	110.0	42.0	42.0
TDF-125A	5″ (F)	174.0	150.0	132.0	70.0	70.0
TDF-150A	6″ (F)	282.0	221.0	176.0	84.0	84.0
TDF-200A	8″ (F)	447.0	331.0	308.0	112.0	112.0
TDF-250A	10″ (F)	733.0	555.0	528.0	196.0	196.0
TDF-300A	12″ (F)	1103.0	850.0	792.0	336.0	336.0

Dimensions

Model	A	B	C	D	E	F
TDF-15A	82	88	-	258	273	-
TDF-20A	108	114	-	376	398	-
TDF-25A	108	114	-	594	620	-
TDF-40A	160	160	-	830	880	-
TDF-50A	180	202	-	1100	1140	-
TDF-65A	570	400	267	855	1410	-
TDF-80A	650	400	267	860	1420	-
TDF-100A	690	445	318	930	1505	-
TDF-125A	690	445	318	930	1505	-
TDF-150A	812	-	407	970	1990	1720
TDF-200A	1000	-	508	1325	2326	1998
TDF-250A	1200	-	610	1200	2600	2150
TDF-300A	1400	-	760	1230	2600	2150

Element Q'TY

Model	370	320	310	130	150
TDE-15A	1				
TDE-20A	1				
TDE-25A	1				
TDE-40A	1				
TDE-50A	1				
TDE-65A	2				
TDE-80A	3				
TDE-100A	5				
TDE-125A	6				
TDE-150A	8			11	
TDE-200A	11		14	19	
TDE-250A	19		24	30	
TDE-300A	30		36	42	

High Performance Air Filter

Elements & Material

Model	MAIN PRE TDE-370,320	LINE TDE-310	COALESCENT TDE-130	ADSORBENT TDE-150
Structure & Material				
Main-tenance	Synthetic cleanser washing	Cartridge replacement	Cartridge replacement	Cartridge replacement
Filtting ability	Removes 100% particle size of 〉5㎛ to 40㎛.	Removes 100% solid particle size 〉1㎛.	Removes 100% solid particles size 〉0.01㎛.	Removes 100% solid particles size from 〉0.01ppm
Setting spot	Installed before main filter at prod. line & ref. air dryer or before filter DHF-310, 130, 150. Installation is necessary to overcome condensed water from flowing in if the pipeline is too long.	Installed at the end of prod-pipe-line or at adsorbent air dryer, before DHF-130 & DHF-150 filter inorder to have a longer life.	Can also be installed at the stage where contaminated oil & moisture are to be removed. Moisture can be removed efficiently and absorbent life span can be extended.	Installed at end stage of pipe line where clean air is essential and the removal of solid particle of 0.01ppm is required.
Main& Exchange	If the differential pressure is more than 0.7 kg/㎠, clean the element with synthetic cleanser. Do not clean using gasoline or thinner.	If the differential pressure is 0.5kg/㎠. Filter to be disassembled & old cartridge to be replaced by new one.		

Dimensions

SIZE	15A		20A		25A		40A		50A	
MODEL	TDE 370.320	TDE 310.130.150	TDE 370.320	TDE 310.130.150	TDE 370.320	TDE 310.130.150	TDE 370.320	TDE 310.130.150	TDE 370.320	TDE 310.130.150
DIMENSION(m/m)	40×100	45×150	53×125	63×165	53×250	63×385	69×500	83×520	69×750	83×670

Specification

MAIN ELEMENT 40㎛		PRE ELEMENT 5㎛		LINE ELEMENT 1㎛		COALESCENT ELEMENT 0.01㎛		ADSORBENT ELEMENT 0.01ppm	
Model	Nm^3/min	Model	Nm^3/min	Model	Nm^3/min	Model	Nm^3/min	Model	Nm^3/min
TDE 15A-370	2.2	TDE 15A-320	1.8	TDE 15A-310	1.2	TDE 15A-130	1.0	TDE 15A-150	1.0
TDE 20A-370	5.7	TDE 20A-320	3.5	TDE 20A-310	2.8	TDE 20A-130	1.9	TDE 20A-150	1.9
TDE 25A-370	8.0	TDE 25A-320	5.7	TDE 25A-310	5.6	TDE 25A-130	3.4	TDE 25A-150	3.4
TDE 40A-370	17.0	TDE 40A-320	14.0	TDE 40A-310	11.0	TDE 40A-130	10.0	TDE 40A-150	10.0
TDE 50A-370	29.0	TDE 50A-320	25.0	TDE 50A-310	22.0	TDE 50A-130	14.0	TDE 50A-150	14.0
TDE 65A-370	58.0	TDE 65A-320	50.0	TDE 65A-310	48.0	TDE 65A-130	28.0	TDE 65A-150	28.0
TDE 80A-370	88.0	TDE 80A-320	75.0	TDE 80A-310	72.0	TDE 80A-130	42.0	TDE 80A-150	42.0
TDE 100A-370	145.0	TDE 100A-320	125.0	TDE 100A-310	110.0	TDE 100A-130	70.0	TDE 100A-150	70.0
TDE 125A-370	174.0	TDE 125A-320	150.0	TDE 125A-310	132.0	TDE 125A-130	84.0	TDE 125A-150	84.0
TDE 150A-370	282.0	TDE 150A-320	221.0	TDE 150A-310	176.0	TDE 150A-130	112.0	TDE 150A-150	112.0
TDE 200A-370	447.0	TDE 200A-320	331.0	TDE 200A-310	308.0	TDE 200A-130	196.0	TDE 200A-150	196.0
TDE 250A-370	733.0	TDE 250A-320	555.0	TDE 250A-310	528.0	TDE 250A-130	336.0	TDE 250A-150	336.0
TDE 300A-370	1103.0	TDE 300A-320	850.0	TDE 300A-310	792.0	TDE 300A-130	504.0	TDE 300A-150	504.0

TDF 15A-370, 320, 310, 130, 150 Structure & Dimensions

AIR FILTER 370,320

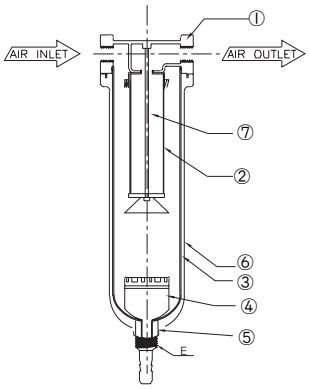

AIR FILTER 310,130,150

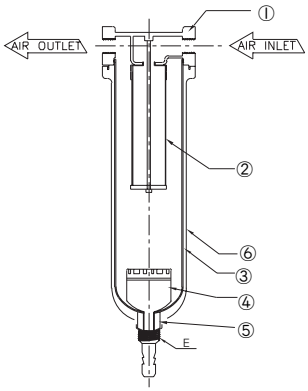

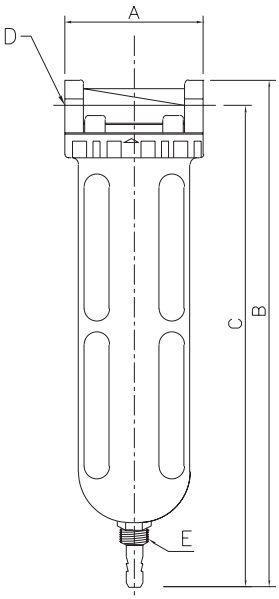

Model	CAPACITY(Nm³/min)	A	B	C	D	E	FILTER ELEMENT
370	2.2	89	278	262	PT1/2″	PF1/4″	MAIN ELEMENT(40u)
320	1.8	89	278	262	PT1/2″	PF1/4″	PRE ELEMENT(5u)
310	1.2	89	278	262	PT1/2″	PF1/4″	LINE ELEMENT(1u)
130	1.0	89	278	262	PT1/2″	PF1/4″	COALESCENT ELEMENT(0.01u)
150	1.0	89	278	262	PT1/2″	PF1/4″	ADSORBENT ELEMENT(0.01ppm)

No.	Parts Name
①	UPPER HOUSING
②	ELEMENT
③	CAP
④	FLOAT
⑤	NUT
⑥	DOWN HOUSING
⑦	STUD BOLT

TDF 20A-370, 320, 310, 130 Structure & Dimensions

AIR FILTER 370,320

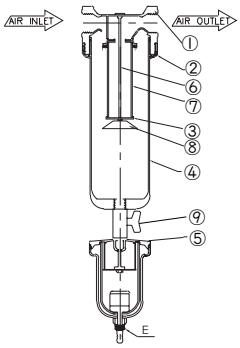

AIR FILTER 310,130

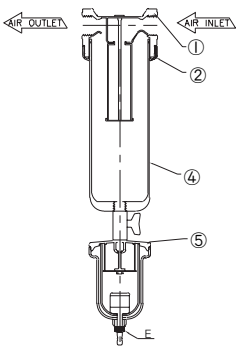

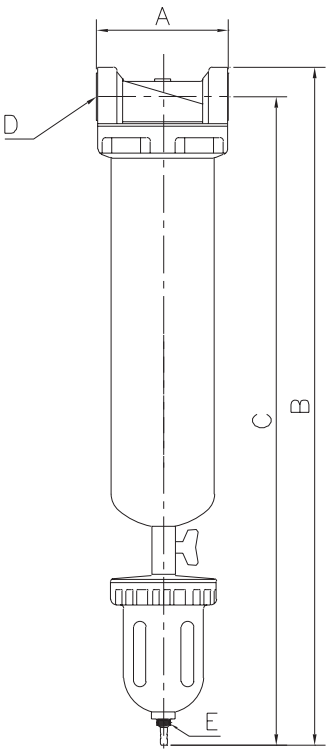

Model	CAPACITY(Nm³/min)	A	B	C	D	E	FILTER ELEMENT
370	5.7	112	490	464	PT 3/4″	PF1/4″	MAIN ELEMENT(40u)
320	3.5	112	490	464	PT 3/4″	PF1/4″	PRE ELEMENT(5u)
310	2.8	112	490	464	PT 3/4″	PF1/4″	LINE ELEMENT(1u)
130	1.9	112	490	464	PT 3/4″	PF1/4″	COALESCENT ELEMENT(0.01u)
150	1.9	112	490	464	PT 3/4″	PF1/4″	COALESCENT ELEMENT(0.01ppm)

No.	Parts Name
①	UPPER HOUSING
②	MIDDLE HOUSING
③	ELEMENT COVER CAP
④	DOWN HOUSING
⑤	AUTO TRAP(PT 1/2″)
⑥	STUD BOLT
⑦	ELEMENT
⑧	CAP
⑨	BALL VALVE

TDF 25A-370, 320, 310, 130 Structure & Dimensions

AIR FILTER 370,320

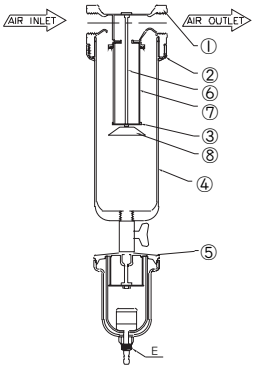

AIR FILTER 310,130

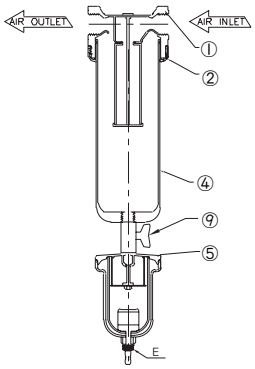

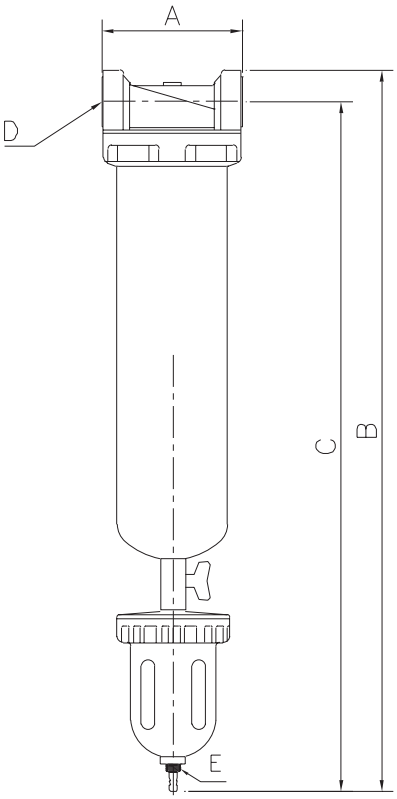

Model	CAPACITY(Nm³/min)	A	B	C	D	E	FILTER ELEMENT
370	8.0	112	700	674	PT 1″	PF1/4″	MAIN ELEMENT(40u)
320	5.7	112	700	674	PT 1″	PF1/4″	PRE ELEMENT(5u)
310	5.0	112	700	674	PT 1″	PF1/4″	LINE ELEMENT(1u)
130	3.4	112	700	674	PT 1″	PF1/4″	COALESCENT ELEMENT(0.01u)
150	3.4	112	700	674	PT 1″	PF1/4″	COALESCENT ELEMENT(0.01ppm)

Model	Parts Name
①	UPPER HOUSING
②	MIDDLE HOUSING
③	ELEMENT COVER CAP
④	DOWN HOUSING
⑤	AUTO TRAP(PT 1/2″)
⑥	STUD BOLT
⑦	ELEMENT
⑧	CAP
⑨	BALL VALVE

TDF 40A-370, 320, 310, 130, 150 Structure & Dimensions

AIR FILTER 370,320

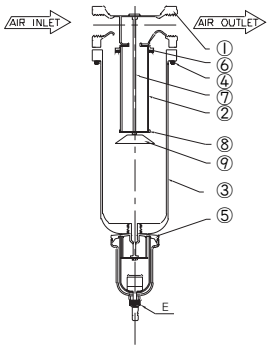

AIR FILTER 310,130,150

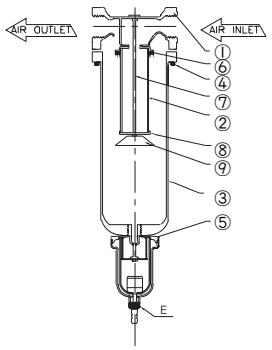

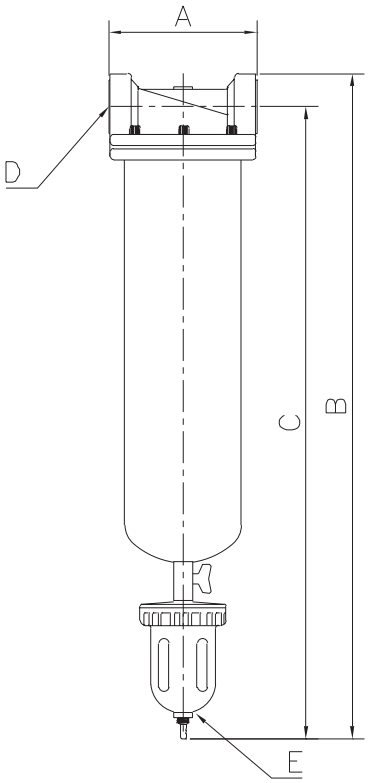

Model	CAPACITY(Nm³/min)	A	B	C	D	E	FILTER ELEMENT
370	17	164	930	892	PT1-1/2″	PF1/4″	MAIN ELEMENT(40u)
320	14	164	930	892	PT1-1/2″	PF1/4″	PRE ELEMENT(5u)
310	11	164	930	892	PT1-1/2″	PF1/4″	LINE ELEMENT(1u)
130	10	164	930	892	PT1-1/2″	PF1/4″	COALESCENT ELEMENT(0.01u)
150	10	164	930	892	PT1-1/2″	PF1/4″	ADSORBENT ELEMENT(0.01ppm)

No.	Parts Name
①	UPPER HOUSING
②	ELEMENT
③	DOWN HOUSING
④	WRENCH BOLT
⑤	AUTO TRAP(PT 1/2″)
⑥	DICFLACTAR
⑦	STUD BOLT
⑧	ELEMENT COVER CAP
⑨	CAP

TDF 50A-370, 320, 310, 130, 150 Structure & Dimensions

AIR FILTER 370,320

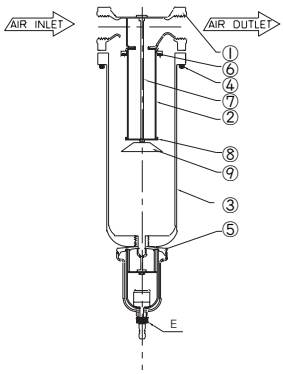

AIR FILTER 310,130,150

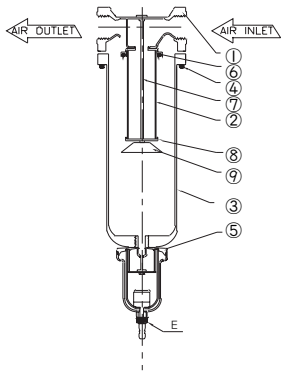

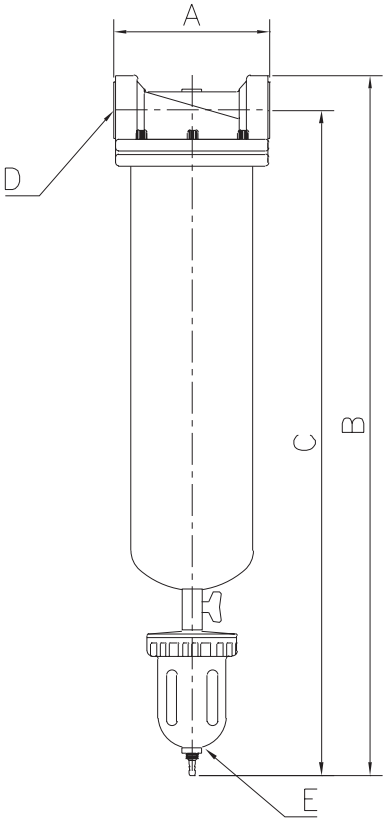

Model	CAPACITY(Nm³/min)	A	B	C	D	E	FILTER ELEMENT
370	29	181	1180	1141	PT 2″	PF1/4″	MAIN ELEMENT(40u)
320	25	181	1180	1141	PT 2″	PF1/4″	PRE ELEMENT(5u)
310	22	181	1180	1141	PT 2″	PF1/4″	LINE ELEMENT(1u)
130	14	181	1180	1141	PT 2″	PF1/4″	COALESCENT ELEMENT(0.01u)
150	14	181	1180	1141	PT 2″	PF1/4″	ADSORBENT ELEMENT(0.01ppm)

No.	Parts Name
①	UPPER HOUSING
②	ELEMENT
③	DOWN HOUSING
④	WRENCH BOLT
⑤	AUTO TRAP(PT 1/2″)
⑥	DICFLACTAR
⑦	STUD BOLT
⑧	ELEMENT COVER CAP
⑨	CAP

TDF 65A-370, 320, 310, 130, 150 Structure & Dimensions

AIR FILTER 370,320

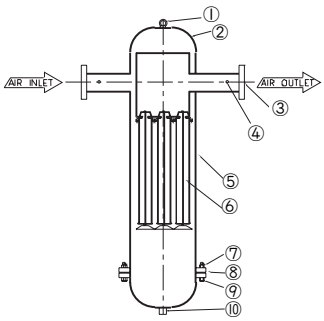

AIR FILTER 310,130,150

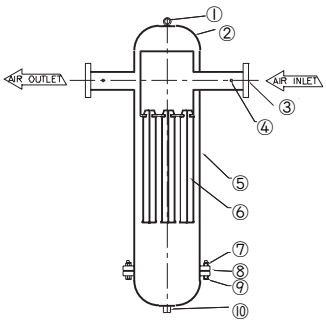

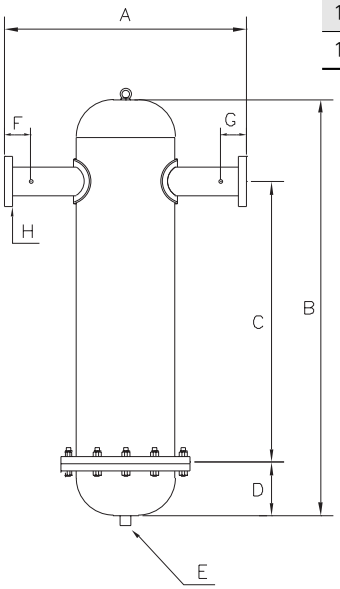

Model	CAPACITY(Nm³/min)	A	B	C	D	E	F	G	H	FILTER ELEMENT
370	58.0	570	1210	860	140	PT 1/2″	70	70	(F)2 1/2″	MAIN ELEMENT(40u)
320	50.0	570	1210	860	140	PT 1/2″	70	70	(F)2 1/2″	PRE ELEMENT(5u)
310	48.0	570	1110	760	140	PT 1/2″	70	70	(F)2 1/2″	LINE ELEMENT(1u)
130	28.0	570	1110	760	140	PT 1/2″	70	70	(F)2 1/2″	COALESCENT ELEMENT(0.01u)
150	28.0	570	1110	760	140	PT 1/2″	70	70	(F)2 1/2″	ADSORBENT ELEMENT(0.01ppm)

No.	Parts Name
①	EYE BOLT 3/4″
②	CAP 10″
③	IN/OUTLET FLANGE 2 1/2″
④	PRESSURE GAUGE(SOKET 1/4″)
⑤	PIPE 10″
⑥	ELEMENT
⑦	BOLT(M22×75)
⑧	FLANGE ANSI 150# SO.RF(10″)
⑨	NUT(M22)
⑩	DRAIN NOZZLE(SOKET 1/2″)

TDF 80A-370, 320, 310, 130, 150 Structure & Dimensions

AIR FILTER 370,320

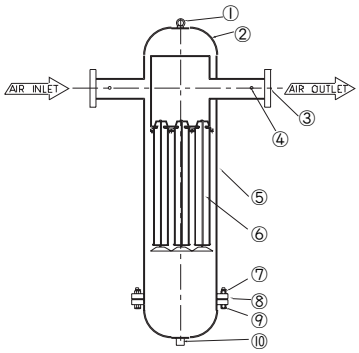

AIR FILTER 310,130,150

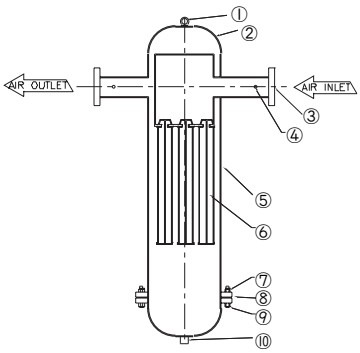

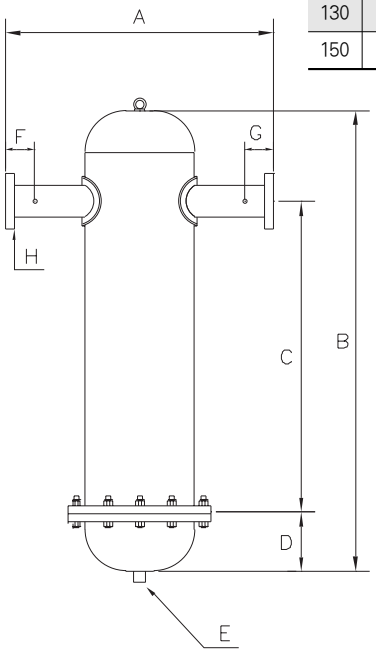

Model	CAPACITY(Nm³/min)	A	B	C	D	E	F	G	H	FILTER ELEMENT
370	88.0	570	1220	860	140	PT 1/2″	70	70	(F)3″	MAIN ELEMENT(40u)
320	75.0	570	1220	860	140	PT 1/2″	70	70	(F)3″	PRE ELEMENT(5u)
310	72.0	570	1120	760	140	PT 1/2″	70	70	(F)3″	LINE ELEMENT(1u)
130	42.0	570	1120	760	140	PT 1/2″	70	70	(F)3″	COALESCENT ELEMENT(0.01u)
150	42.0	570	1120	760	140	PT 1/2″	70	70	(F)3″	ADSORBENT ELEMENT(0.01ppm)

No.	Parts Name
①	EYE BOLT $\frac{3}{4}$″
②	CAP 10″
③	IN/OUTLET FLANGE 3″
④	PRESSURE GAUGE(SOKET $\frac{1}{4}$″)
⑤	PIPE 10″
⑥	ELEMENT
⑦	BOLT(M22×75)
⑧	FLANGE ANSI 150# SO.RF(10″)
⑨	NUT(M22)
⑩	DRAIN NOZZLE(SOKET $\frac{1}{2}$″)

TDF 100A-370, 320, 310, 130, 150 Structure & Dimensions

AIR FILTER 370,320

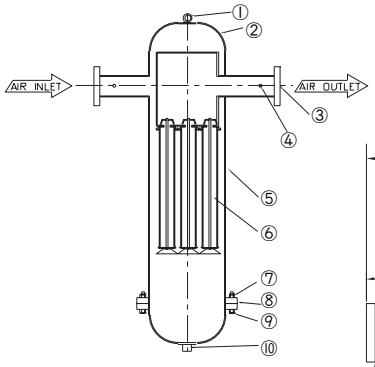

AIR FILTER 310,130,150

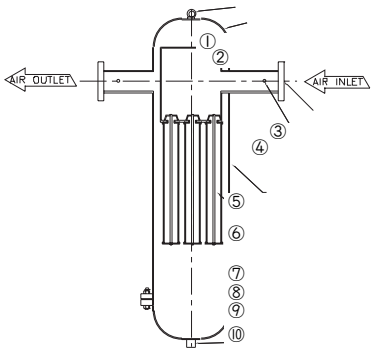

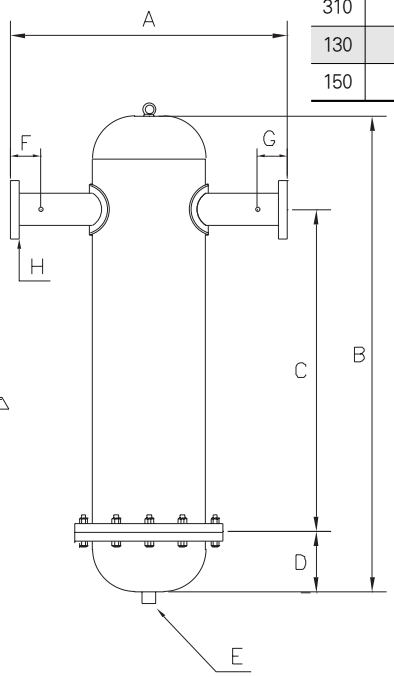

Model	CAPACITY(Nm³/min)	A	B	C	D	E	F	G	H	FILTER ELEMENT
370	145.0	620	1305	860	140	PT 1/2″	70	70	(F)4″	MAIN ELEMENT(40u)
320	125.0	620	1305	860	140	PT 1/2″	70	70	(F)4″	PRE ELEMENT(5u)
310	110.0	620	1205	760	140	PT 1/2″	70	70	(F)4″	LINE ELEMENT(1u)
130	70.0	620	1205	760	140	PT 1/2″	70	70	(F)4″	COALESCENT ELEMENT(0.01u)
150	70.0	620	1205	760	140	PT 1/2″	70	70	(F)4″	ADSORBENT ELEMENT(0.01ppm)

No.	Parts Name
①	EYE BOLT $\frac{3}{4}$″
②	CAP 12″
③	IN/OUTLET FLANGE 4″
④	PRESSURE GAUGE(SOKET $\frac{1}{4}$″)
⑤	PIPE 12″
⑥	ELEMENT
⑦	BOLT(M22×75)
⑧	FLANGE (12″)
⑨	NUT(M22)
⑩	DRAIN NOZZLE(SOKET $\frac{1}{2}$″)

TDF 125A-370, 320, 310, 130, 150 Structure & Dimensions

AIR FILTER 370,320

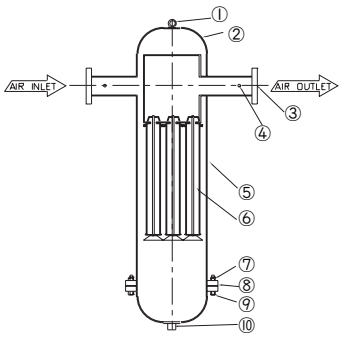

AIR FILTER 310,130,150

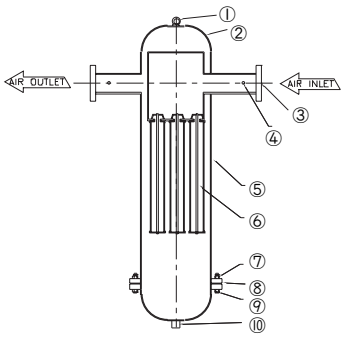

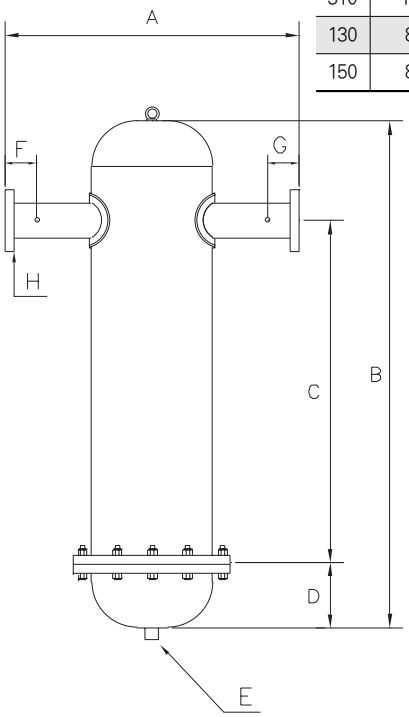

Model	CAPACITY(Nm³/min)	A	B	C	D	E	F	G	H	FILTER ELEMENT
370	174.0	620	1305	860	140	PT 1/2″	70	70	(F)5″	MAIN ELEMENT(40u)
320	150.0	620	1305	860	140	PT 1/2″	70	70	(F)5″	PRE ELEMENT(5u)
310	132.0	620	1205	760	140	PT 1/2″	70	70	(F)5″	LINE ELEMENT(1u)
130	84.0	620	1205	760	140	PT 1/2″	70	70	(F)5″	COALESCENT ELEMENT(0.01u)
150	84.0	620	1205	760	140	PT 1/2″	70	70	(F)5″	ADSORBENT ELEMENT(0.01ppm)

No.	Parts Name
①	EYE BOLT $\frac{3}{4}$″
②	CAP 12″
③	FLANGE 5″
④	PRESSURE GAUGE(SOKET $\frac{1}{4}$″)
⑤	PIPE 12″
⑥	ELEMENT
⑦	BOLT(M22×75)
⑧	FLANGE (12″)
⑨	NUT(M22)
⑩	DRAIN NOZZLE(SOKET $\frac{1}{2}$″)

TDF 150A-370, 320, 310, 130, 150 Structure & Dimensions

AIR FILTER 370,320

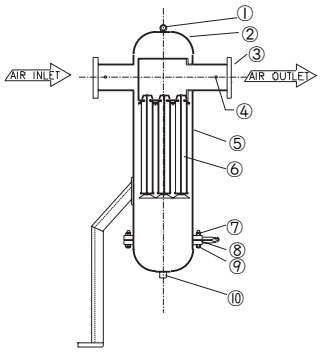

AIR FILTER 310,130,150

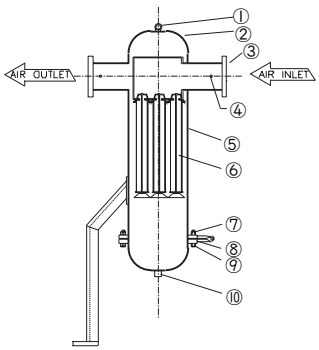

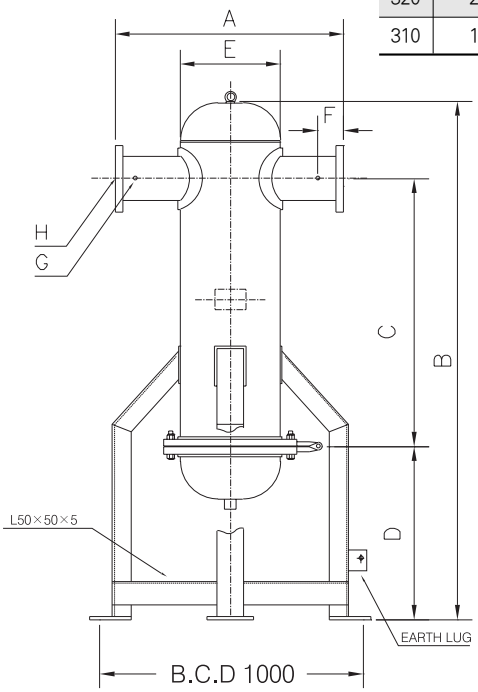

Model	CAPACITY(Nm³/min)	A	B	C	D	E	F	G	H	FILTER ELEMENT
370	282.0	812	2059.8	970	850	406.4	100	1/4″	(F)6″	MAIN ELEMENT(40u)
320	221.0	812	2059.8	970	850	406.4	100	1/4″	(F)6″	PRE ELEMENT(5u)
310	176.0	812	2059.8	970	850	406.4	100	1/4″	(F)6″	LINE ELEMENT(1u)

No.	Parts Name
①	EYE BOLT $\frac{3}{4}$″
②	CAP 16″
③	IN/OUTLET FLANGE 6″
④	PRESSURE GAUGE NOZZLE $\frac{1}{4}$″
⑤	PIPE 16″
⑥	ELEMENT
⑦	BOLT(B24×80)
⑧	FLANGE (16″)
⑨	NUT(M24)
⑩	DRAIN NOZZLE $\frac{1}{2}$″

TDF 150A-130, 150 Structure & Dimensions

Model	CAPACITY(Nm³/min)	A	B	C	D	E	F	G	H	FILTER ELEMENT
130	112.0	812	2059.8	970	850	406.4	100	1/4″	(F)6″	COALESCENT ELEMENT(0.01u)
150	112.0	812	2059.8	970	850	406.4	100	1/4″	(F)6″	ADSORBENT ELEMENT(0.01ppm)

AIR FILTER 130,150

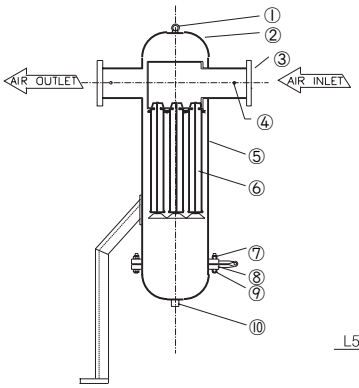

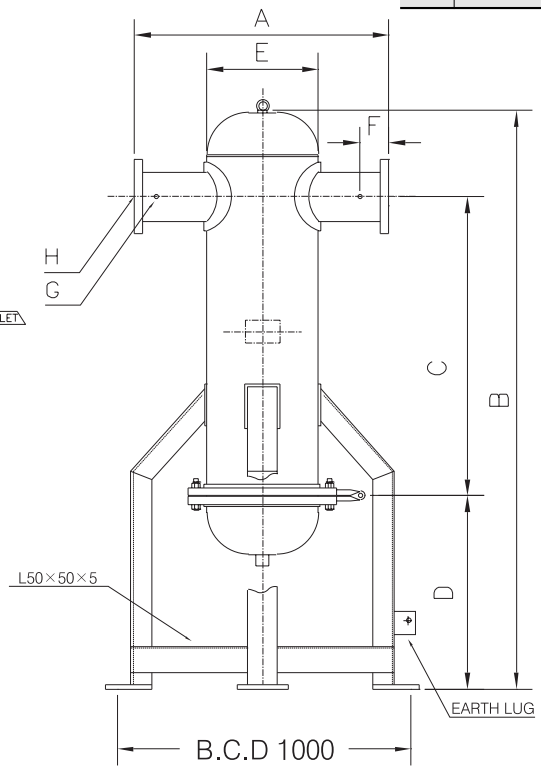

No.	Parts Name
①	EYE BOLT ¾″
②	CAP 16″
③	IN/OUTLET FLANGE 6″
④	PRESSURE GAUGE NOZZLE ¼″
⑤	PIPE 16″
⑥	ELEMENT
⑦	BOLT(B24×80)
⑧	FLANGE (16″)
⑨	NUT(M24)
⑩	DRAIN NOZZLE ½″

TDF 200A-370, 320 Structure & Dimensions

Model	CAPACITY(Nm³/min)	A	B	C	D	E	F	G	H	FILTER ELEMENT
370	447.0	1000	2326	1327	673	508	130	1/4″	(F)8″	MAIN ELEMENT(40u)
320	331.0	1000	2326	1327	673	508	130	1/4″	(F)8″	PRE ELEMENT(5u)

AIR FILTER 370,320

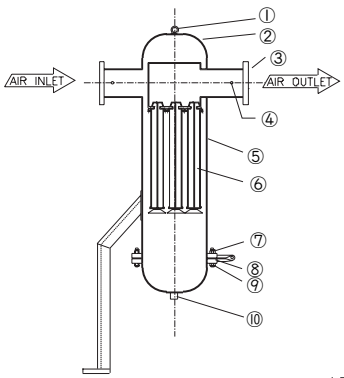

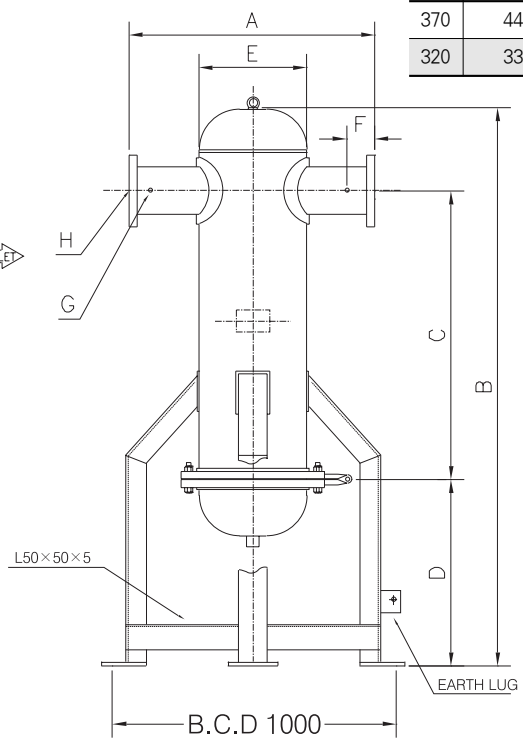

No.	Parts Name
①	EYE BOLT ¾″
②	CAP 20″
③	IN/OUTLET FLANGE 8″
④	PRESSURE GAUGE NOZZLE ¼″
⑤	PIPE 20″
⑥	ELEMENT
⑦	BOLT(B24×95)
⑧	FLANGE (20″)
⑨	NUT(M24)
⑩	DRAIN NOZZLE ½″

TDF 200A-310, 130, 150 Structure & Dimensions

Model	CAPACITY(Nm³/min)	A	B	C	D	E	F	G	H	FILTER ELEMENT
310	308.0	1000	2326	1327	673	508	130	1/4″	(F)8″	LINE ELEMENT(1u)
130	196.0	1000	2326	1327	673	508	130	1/4″	(F)8″	COALESCENT ELEMENT(0.01u)
150	196.0	1000	2326	1327	673	508	130	1/4″	(F)8″	ADSORBENT ELEMENT(0.01ppm)

AIR FILTER 310,130,150

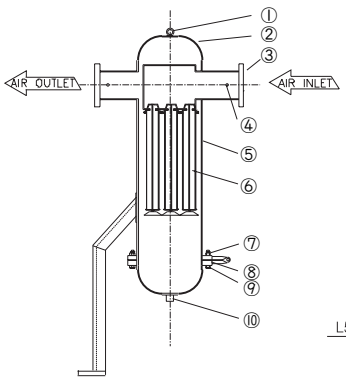

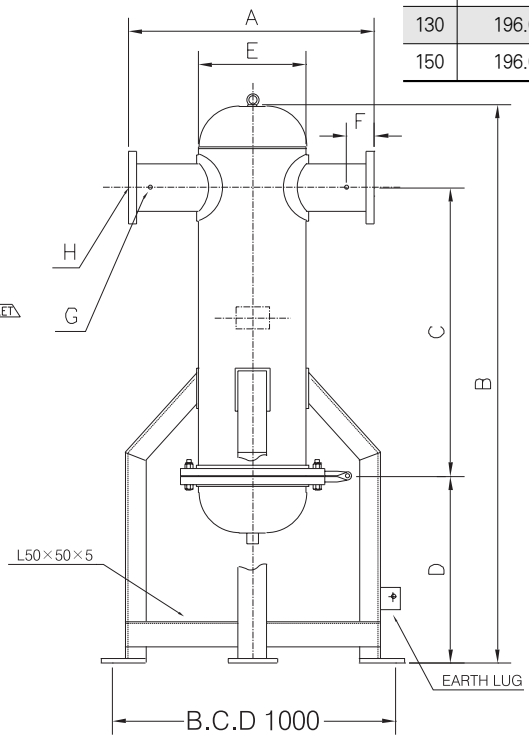

No.	Parts Name
①	EYE BOLT ¾″
②	CAP 20″
③	IN/OUTLET FLANGE 8″
④	PRESSURE GAUGE NOZZLE ¼″
⑤	PIPE 20″
⑥	ELEMENT
⑦	BOLT(B24×95)
⑧	FLANGE (20″)
⑨	NUT(M24)
⑩	DRAIN NOZZLE ½″

TDF 250A-370, 320 Structure & Dimensions

Model	CAPACITY(Nm³/min)	A	B	C	D	E	F	G	H	FILTER ELEMENT
370	733.0	1200	2130	990	673	609.6	80	1/4″	(F)10″	MAIN ELEMENT(40u)
320	555.0	1200	2130	990	673	609.6	80	1/4″	(F)10″	PRE ELEMENT(5u)

AIR FILTER 370,320

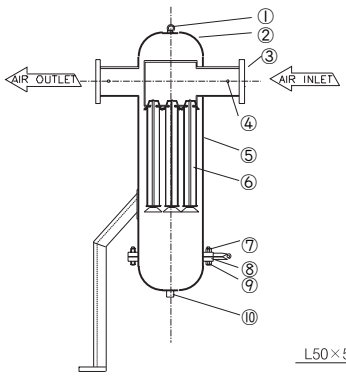

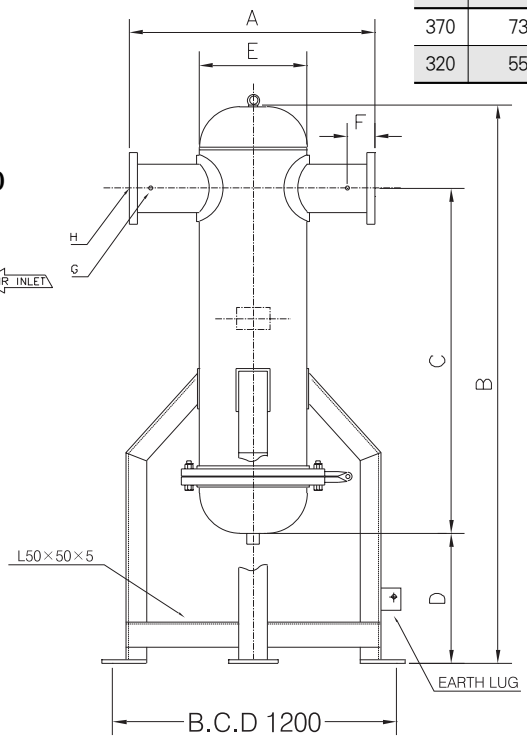

No.	Parts Name
①	EYE BOLT ¾″
②	CAP 24″
③	IN/OUTLET FLANGE 10″
④	PRESSURE GAUGE NOZZLE ¼″
⑤	PIPE 24″
⑥	ELEMENT
⑦	BOLT(B24×80)
⑧	FLANGE (24″)
⑨	NUT(M30)
⑩	DRAIN NOZZLE ½″

TDF 250A-310 Structure & Dimensions

Model	CAPACITY(Nm^3/min)	A	B	C	D	E	F	G	H	FILTER ELEMENT
310	528.0	1200	2130	990	745	660.4	80	1/4″	(F)10″	LINE ELEMENT(1u)

AIR FILTER 310

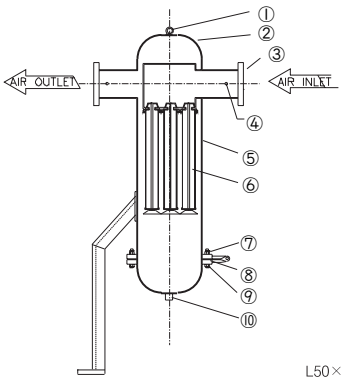

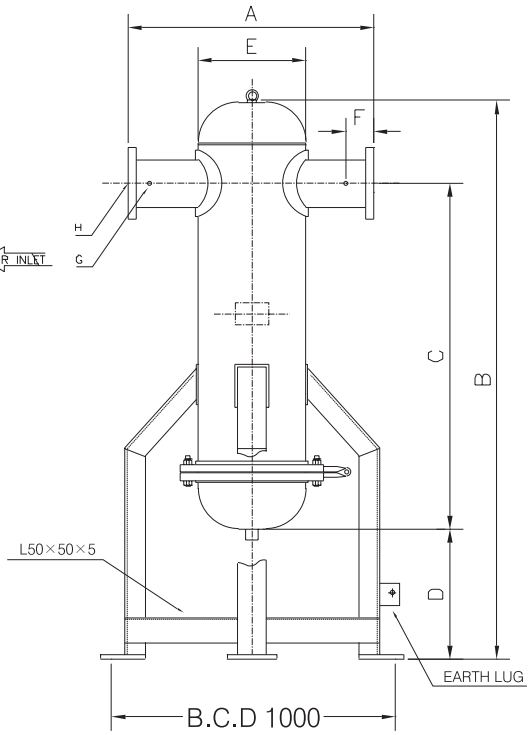

No.	Parts Name
①	EYE BOLT $\frac{3}{4}$″
②	CAP 26″
③	IN/OUTLET FLANGE 10″
④	PRESSURE GAUGE NOZZLE $\frac{1}{4}$″
⑤	PIPE 26″
⑥	ELEMENT
⑦	BOLT(B24×80)
⑧	FLANGE (26″)
⑨	NUT(M30)
⑩	DRAIN NOZZLE $\frac{1}{2}$″

TDF 250A-130, 150 Structure & Dimensions

Model	CAPACITY(Nm^3/min)	A	B	C	D	E	F	G	H	FILTER ELEMENT
130	336.0	1200	2130	990	745	660.4	80	1/4″	(F)10″	COALESCENT ELEMENT(0.01u)
150	336.0	1200	2130	990	745	660.4	80	1/4″	(F)10″	ADSORBENT ELEMENT(0.01ppm)

AIR FILTER 130,150

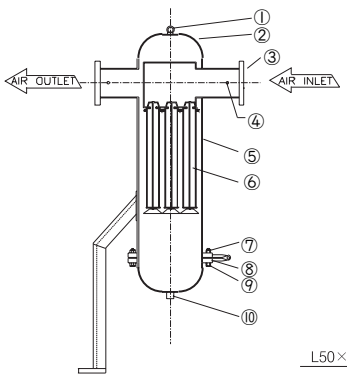

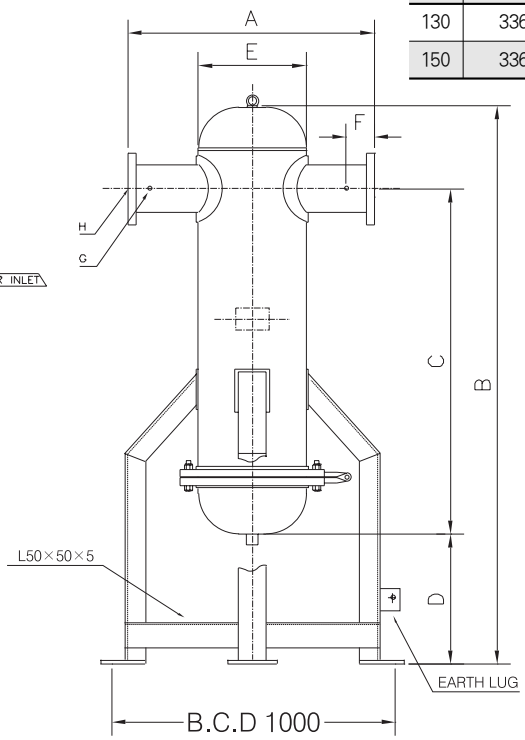

No.	Parts Name
①	EYE BOLT $\frac{3}{4}$″
②	CAP 26″
③	IN/OUTLET FLANGE 10″
④	PRESSURE GAUGE NOZZLE $\frac{1}{4}$″
⑤	PIPE 26″
⑥	ELEMENT
⑦	BOLT(B24×80)
⑧	FLANGE (26″)
⑨	NUT(M30)
⑩	DRAIN NOZZLE $\frac{1}{2}$″

Electronic Trap

TDED-015

STRAINER VALVE
(OPTION)

SPECIFICATIONS

Model	TDED-015	TDED-006
Type	Direct acting Valve	
Max. Pressure	16Kg/cm²	40Kg/cm²
Connections	PT 1/2″	PT 1/4″
Electric Power	AC 1ø 220V 50Hz / 60Hz	

● CHARACTERISTICS

- The all of TDED serics is direct operated solenoid valves with wide orifice hole size.
- The viton seal can be extend to life cycle of solenoid valves.
- Apply to strainer valves for protect to dirt and impurities (option).
- Can be control and set by operator for on time (sec) and off time (min).

AUTO DRAIN TRAP

TDAD-125

TDAD-300

FLOAT

TD-12

Differential Pressure Gauge

TPG-15

SPECIFICATION

MODEL	TDAD-125	TDAD-300	TD-12	TDDPG-15
working pressure	1.5 - 9.9Kgf/cm²			
max. pressure	13Kgf/cm²		17Kgf/cm²	
temperature	60℃ ↓			
in/out connections	PT1/2″	M30	Drain Connection 1/8 NPT″	1/8″ / 1/4″
Applicable to.	Filter(20A-150A) · TANK		Filter, Trap	Filter

● CHARACTERISTIC

- No power connentions required.
- Automatically drains when condensed waters reached a certain level, through Float-type valve(Float).
- The special designed Float can be solved problem of air leakage by dirt. When the happen to leakage on the Float, the operator can be remove to dirt by up and down of several time on one touch fitting parts.

Applied Industry Fields / Application Areas

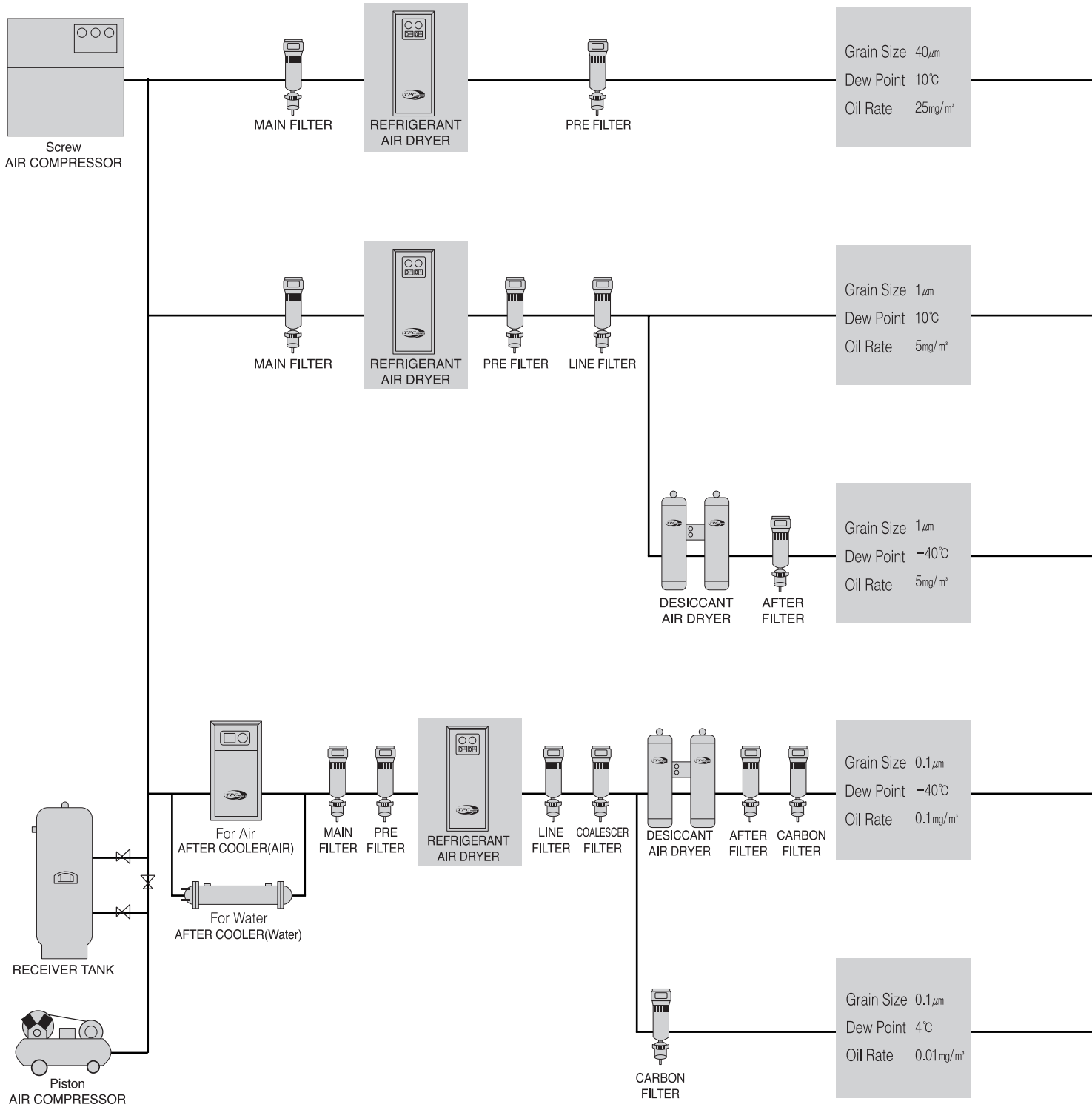

Service Air
- Air Tools

Mining Industry
- Air Tools
- Breathable Air

Service Air
- Control System
- Forging Facilities
- Blowing System
- Conveyor System

Electric Power Industry
- Gas Turbine & Gas Booster
- Control System
- Emergency Generator
- Gas Booster

Glass & PET Manufacture
- Control System
- Conveyor System
- Bottle Manufacture

Nuclear Power Industry
- Emergency Generator
- Control System
- Generator Cooling
- Service Air

Paper & Fabric Industry
- Control System
- Conveyer System
- Service Air

Machinary
- Automation System
- Service Air

Gas Industry
- Liquefaction
- Preservation
- Boosting

Painting Industry
- Painting
- Cleaning
- Service Air

Air Supply Instrumentation
- Engine Starting System
- Service Air

Heavy Industry
- Control System
- Engine Starting System
- Service Air

Petrochemical Industry
- Refinery
- Transmissons
- Processing

Automation Industry
- Control System
- Operating System

Electronic Industry
- Control System
- Heat Treatment System
- Coating System

Pharmcy Indusrty
- Control System
- Conveyer, Mixing System
- Dentist's Air Tools
- Breathable Air

Chemical Indusrty
- Control System
- Chemical Reaction
- Conveyer System
- Service Air

Air-Liquefaction Separation
- Turn Key Engineering

Powder & Liquid Mixing
- Anti-Oxidation System
- Mixing System
- Transmissions

Food Indusrty
- Packing
- Storing
- Fermentation
- Carbon Dioxide
- Refrigeration

Environment Industry
- Ozon Generator
- Wastewater Treatment
- Incineration Plant
- Dust Collection Plant
- Desulfurization Plant

Refrigerated Air Dryer

TAD05 ~ TAD750 series

- Removes harmful particles in the compressed air.
- Removes moisture caused by the process of compression using refrigerated gas.
- Reliable refrigeration equipment for a stable cooling system.

How to Order

TAD 05 — 1

1 2 3

1 Refrigerated Air Dryer(TPC Air Dryer)

2 Standard Size

Symbol	Appliable Air Compressor(HP)	Symbol	Appliable Air Compressor(HP)
05	5	150	150
07	7.5	200	200
10	10	250	250
15	15	300	300
20	20	400	400
30	30	500	500
50	50	600	600
75	75	750	750
100	100		

3 Voltage

1	AC230V, 50Hz	(TAD05 ~ TAD750)
2	AC380V, 50Hz	(TAD150 ~ TAD750)
3	AC440V, 50Hz	(TAD150 ~ TAD750)

Correction Factors

Service pressure(kgf/cm²)	3	4	5	6	7	8	9	10	11	12	13	14	15
Pressure exchange(C1)	0.74	0.84	0.91	0.96	1.00	1.04	1.06	1.09	1.11	1.12	1.14	1.15	1.17

Corrected Flow Rate(FA)

FA = Flow capacity×C1×C2×C3

Ambient temp.(℃)	25	30	35	38	40	43	45	50
Temp. exchange(C2)	1.16	1.11	1.06	1.00	0.95	0.89	0.84	0.78

Air Inlet Temp.(℃)	30	35	38	40	43	45	50	55	60
Inlet Temp. exchange(C3)	1.32	1.15	1.00	0.92	0.83	0.78	0.65	0.52	0.39

SPECIFICATIONS(Air Cooled Type)

MODEL		TAD05	TDA07	TDA 10	TDA 15	TDA 20	TDA 30	TDA 50	TDA 75	TDA 100	TDA 150	TDA 200	TDA 250	TDA 300	TDA 400	TDA 500	TDA 600	TDA 750
Connections(Inch)		3/4″(S)				1″(S)		1½″(S)	2″(S)		3″(F)		4″(F)			6″(F)		8″(F)
Flow Capacity(Nm^3/min)		0.62	0.97	1.35	1.96	2.63	3.85	7.24	11.13	14.62	21.85	31.32	40.13	47.56	59.47	73.92	89.56	112.47
적용 공기압축기(HP)		5	7.5	10	15	20	30	50	75	100	150	200	250	300	400	500	600	750
Refrigeration Comp' (HP)		1/4	1/4	1/4	1/3	1/2	3/4	1	1½	2	3	5	5	7½	7½	10	10	15
Refrigerant (Freon Gas)		R22																
Dew Point		4℃																
Max. Pressure		9.9kg/cm2																
Fluid		(COMPRESSED AIR)																
Inlet Temp'		2 ~ 40℃																
Ambient Temp'		1.7 ~ 40℃																
Condenser		AIR COOLED TYPE																
Electric Power Source	V	AC 220V 1ø 60Hz									AC 220V/380V/440V 3ø 60Hz							
	A	4.03	4.03	4.03	6.35	9.12	9.12	10.4	9.29	14.0	4.0	4.0	7.21	7.21	9.5	13.7	13.7	18.0
	Kw	0.747	0.747	0.747	1.207	1.728	1.728	2.064	2.02	3.09	2.6	4.75	4.75	6.25	6.25	9.0	9.0	12.5
Weight(kg)		27	30	35	45	62	71	86	93	101	238	284	284	476	548	782	826	1210
Dimension W×L×H		300×580×510				430×820×640		490×940×820	570×1090×930	570×1190×990	950×1500×1530	900×1600×1800	900×1800×1800		1000×2000×1800	1200×2800×2200		

- Flow capacities shown are not inclusive of Pressure drop.
- All specifications can be changed for better performance without prior notice.
- Models with special specifications are available on request.

TAD 5-100

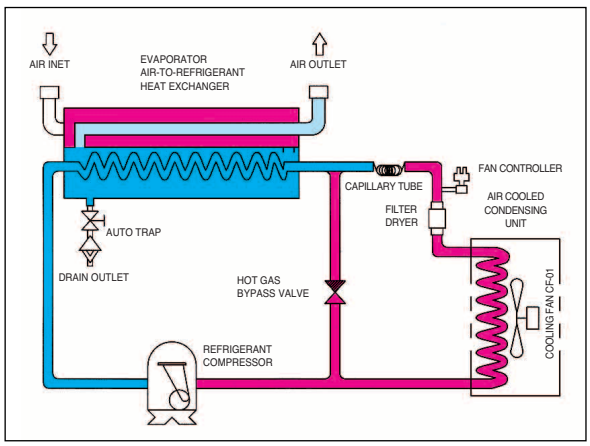

TAD 150-400

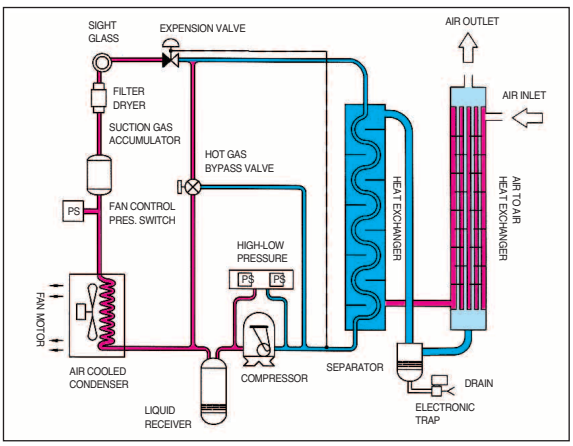

TAD 500-1200 & TAD 500W-6000W

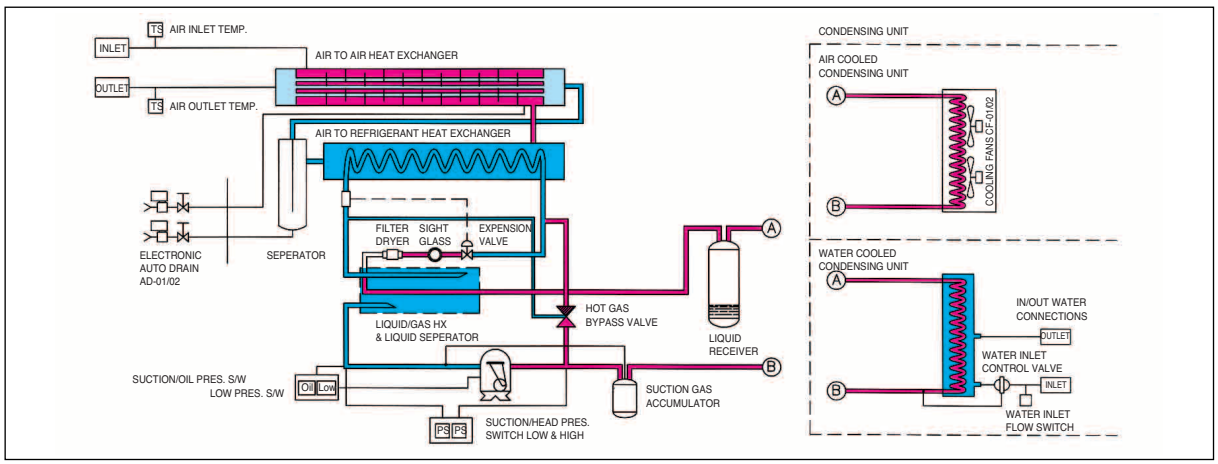

TPC PNEUMATICS

1. Installation

■ **Read this manual before installation to prevent repairs and to promote the life of the dryer.**

■ Installation place

① Place the dryer on a flat surface.
② Make sure there is adequate ventilation
③ Avoid contract with acidic or alkali materials.
④ Avoid areas where combusitible in a convenient location for electric wiring and pipe fitting.
⑤ The dryer should be protected from excessive dust vibration.
⑥ Install in a convenient place for maintenance.
⑦ Install in a location where ambient temperature is maintained between 1.7℃ and 40℃.

■ Caution

· Things to avoid - Uneven place, vibration, sunlight, rain and moisture, inadequate ventilation, temperature below or above 1.7℃~40℃.
· If temperature falls below 2℃, the drain trap will freeze up.
· If the temperature exceeds 40℃, the dryer will be cease to operate.

2. Wiring

· Capacity is as the following:

Type \ Model	TAD-5~30	TAD-50	TAD-75	TAD-100
Voltage	AC 230, 220V / 1PH / 50Hz			
Cable(㎟)	Over 1.25	Over 2.0	Over 5.5	

· A safety breaker should be installed to avoid electric leakage and shock.
· The dryer should be grounded to avoid electric shock.
· The voltage must not very ±5% of the rated voltage.

3. Operation

· After installation, please check the following ;
· Pipe fitting and connections properly installed and is dryer wired properly?
· Is the By-pass valve closed?
· Is the drain discharge valve open?
· Check whether the fan is rotating in clockwise. In case the ratating direction is opposite, change R.S.T. - (TAD-100)

· Power source
· Is the power source the normal voltage?
· Is the fuse capacity proper for the voltage used?
· Operation
push the "ON" button to start operation.
When the lamp is on, operation of the dryer will begin within one minute of operation the refrigerant gauge indicator should read between 4 ~ 4.5kgf/cm^2.

After 3 minutes compressed air should be sent to the dryer. The compressed air should be sent slowly to the dryer to avoid damaging the machine.

■ Caution

· After the dryer is turn off, You must wait 5 minutes before resuming operation.
During operation the fan will turn on and off repeatedly. The fan will start and stop automatically.

4. Safety device

A safety device is installed inside the machine, in case the safety device is activated the dryer will stop automatically.

· Motor protector
In case of power surges to the refrigerant compressor, the dryer will automatically stop.

· Resetting the safety device.
Remove any causes that triggered the safety device.
Push "ON" button to resume use.

5. Maintenance

· Check the auto drain trap.
· If the auto drain trap is 1/3 full, it is operating normally.
· Check regularly for air leakages.
· Check the water discharge for proper drainage.
· The condenser and after cooler should be dusted periodically.
· Cleaning condenser
The condenser should be cleaned periodically with a vacuum cleaner, brush, or air gun.
If there is excessive dust in the cindenser, the safety device will operate and the will stop.

■ Caution

When cleaning the cindenser, avoid damaging the fins.

· Electronic drain trap should be cleaned periddically

No.	Name	No.	Name
1	Nipple	6	Electonic valve
2	Valve	7	Timer
3	Y type socket	8	Timer
4	Strainer	9	ON time
5	Nipple	10	Test button

6. Adjusting Hot Gas By-pass Valve

The Hot Gas By-pass Valve is set in the factory before shopment.
In case of the dryer is operatinh abnormally, adjust the valve.
While adjusting the valve, watch the needs until it is operating within the proper range.

R-134A : In case the needle indicates above 2.2kgf/cm^2 ~ 3kgf/cm^2
⇒ Turn the valve nut counter clockwise
In case the needle indicate below 2.2kgf/cm^2 ~ 3kgf/cm^2
⇒ Turn the valve nut clockwise

R-22 : In case the needle indicates above 4kgf/cm^2 ~ 5kgf/cm^2
⇒ Turn the valve nut counter clockwise
In case the needle indicate below 4kgf/cm^2 ~ 5kgf/cm^2
⇒ Turn the valve nut clockwise

7. Trouble shooting guide

If the dryer is not operating properly, check the following

Symptoms		Cause	Remedy
1. Even if the operation switch is on, the dryer does not work.	1. Run lamp does not turn on.	1. Lamp break down. 2. Faulty switch. 3. Low electric power. 4. Faulty refrigerant compressor overload. 5. Faulty of magnet.	1. Replace. 2. Replace. 3. Check voltage correct. 4. Replace. 5. Check
	2. Run lamp turn on	1. Faulty T.H.R 2. Faulty refrigerant compressor 3. Faulty compressor overlay.	1. Replace 2. Replace 3. Replace
2. Water & oil come out, Even if the pressure gauge is normal.		1. Refrigerant leak. 2. Condenser clogged. 3. By-pass valve open. 4. Dregs in electronic drain. 5. Freeze-up of electronic drain.	1. Check gas leakage. 2. Clean 3. Close By-pass valve. 4. Disassemble and clean. 5. Raise ambient temp-higher than 2℃
3. Refrigerant pressure is. High, water and oil come out. Water and oil come out.		1. Dregs in electronic drain. 2. Freeze-up of electronic drain. 3. Too much air. 4. Cooling ability drop. 5. Faulty Hot gas by-pass valve. 6. Condenser clogged. 7. High ambient temperature. 8. Faulty fan motor. 9. Faulty pressure switch for fan control.	1. Disassemble and clean. 2. Raise ambient temp. higher than 2℃ 3. Adjust air volume. 4. Check refrigerant leakage. 5. Replace and adjust. 6. Clean 7. Lower ambient temp. 8. Replace 9. Replace
4. Water in auto drain not discharged.		1. Dregs in electronic valve. 2. Freeze-up of electronic valve.	1. Disassemble and clean. 2. Raise ambient temp. higher than 2℃
5. Fan motor does not operate.		1. Refrigerant leak. 2. Faulty refrigerant compressor. 3. Faulty fan motor. 4. Faulty pressure switch for fan control.	1. Check gas leakage. 2. Replace 3. Replace 4. Replace
6. Air outlet temperature is higher than or the same as air inlet temperature.		1. Refrigerant leakage. 2. Hot gas by-pass valve open. 3. Faulty refrigerant compressor 4. Cooling capacity drop. 5. Faulty hot gas by-pass valve. 6. Condenser clogged.	1. Check Gas leakage. 2. Close by-pass valve. 3. Replace 4. Check refrigerant leakage. 5. Replace and adjust 6. Clean
7. During operation, the dryer stops.		1. Faulty T.H.R 2. Faulty refrigerant compressor. 3. Faulty refrigerant compressor overload. 4. Faulty copressor relay.	1. Replace 2. Replace 3. Replace 4. Replace

TAD05 ~ 15 Dimensions

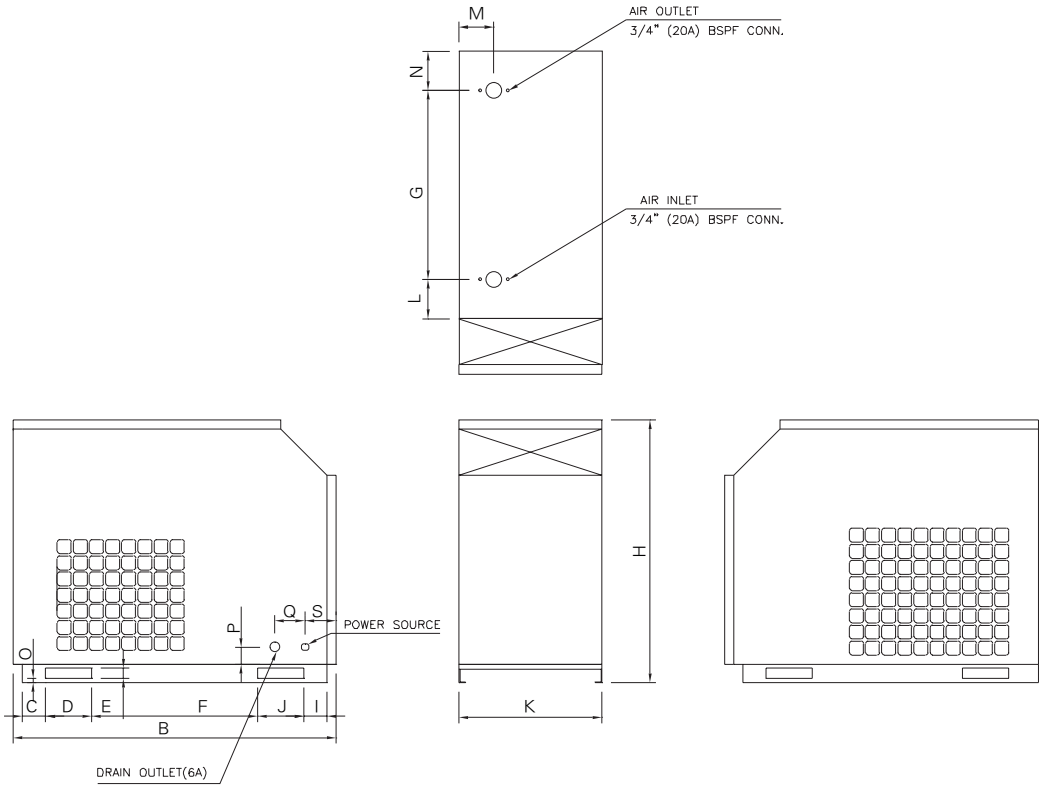

Model	A	B	C	D	E	F	G	H	I	J	K	L	N	M	O	P	Q	S
TAD 05~10	6A	665	50	100	22	325	410	510	50	100	310	50	85	75	10	37	66	68
TAD 15	10A	820	50	100	22	360	410	510	50	100	310	85	85	75	10	37	66	68

TAD20 ~ 30 Dimensions

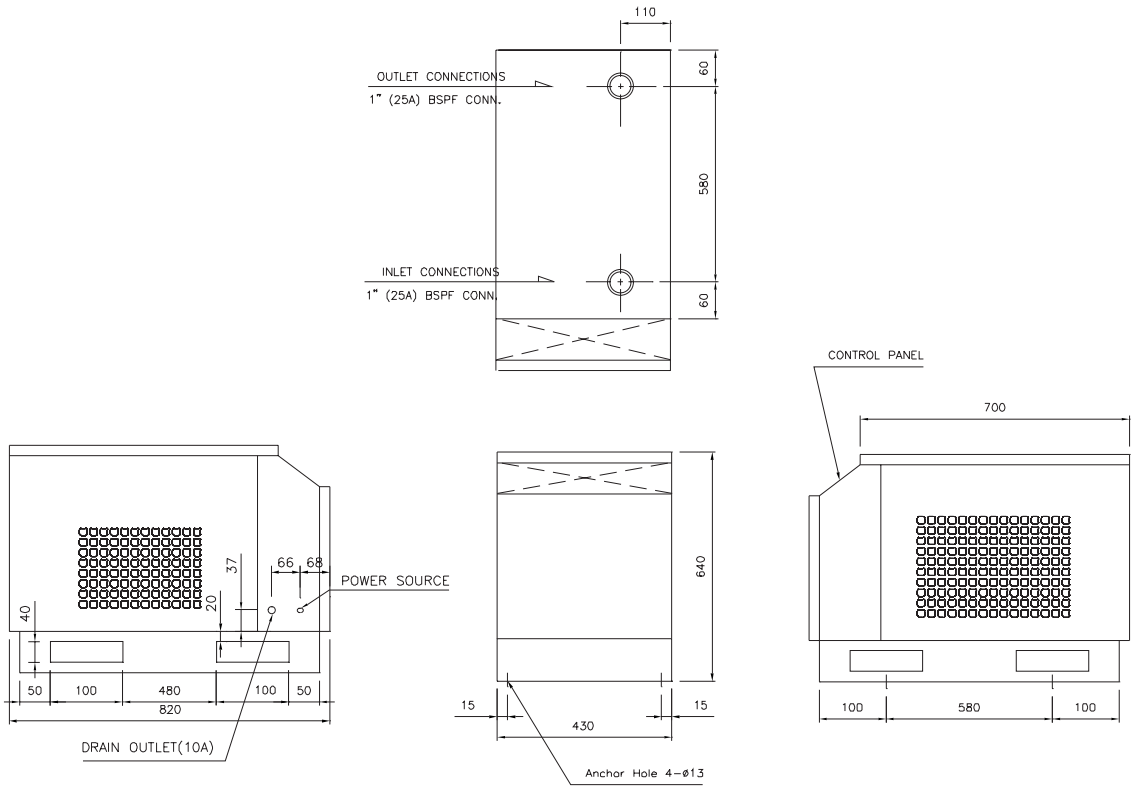

TAD50 ~ 100 Dimensions

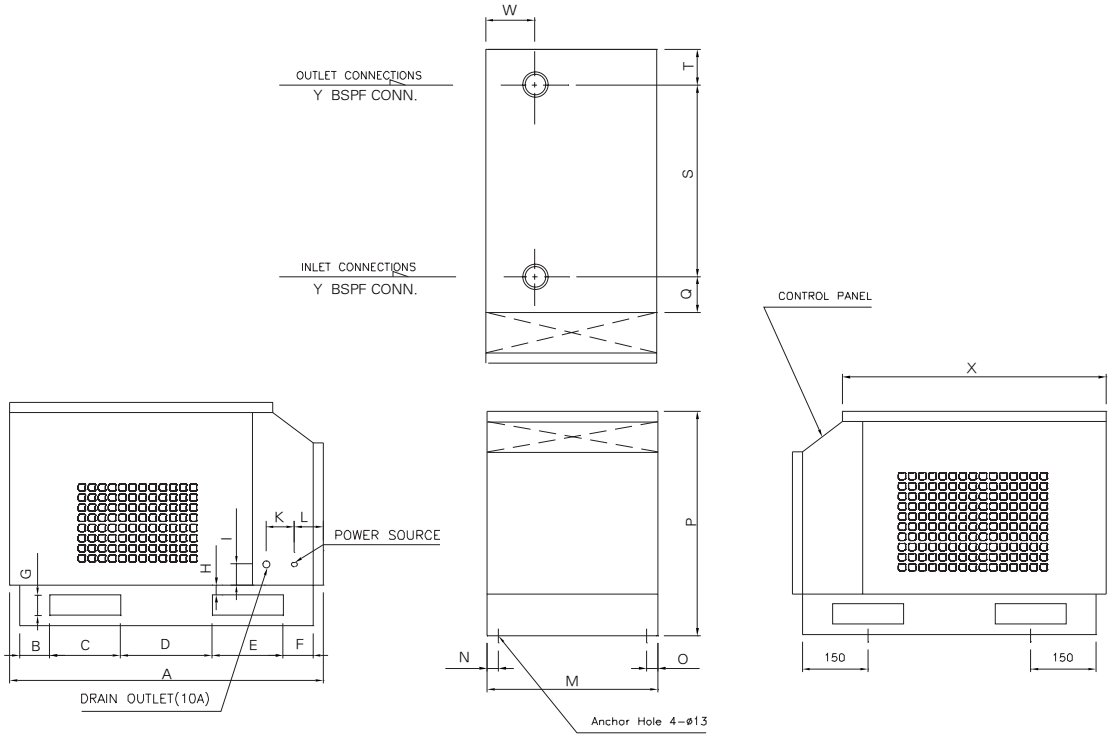

Model	A	B	C	D	E	F	G	H	I	K	L	N	M	O	P	Q	S	T	W	X	Y
TAD 50	940	60	180	420	180	60	60	20	37	66	68	15	490	15	640	60	700	60	140	820	$1\frac{1}{2}$"(40A)
TAD 75	1090	60	180	570	180	60	50	20	37	66	68	15	570	15	930	70	830	70	175	970	2"(50A)
TAD100	1190	60	180	670	180	60	50	30	37	66	68	15	570	15	990	80	910	80	175	1070	2"(50A)

TAD150 ~ 400 Dimensions

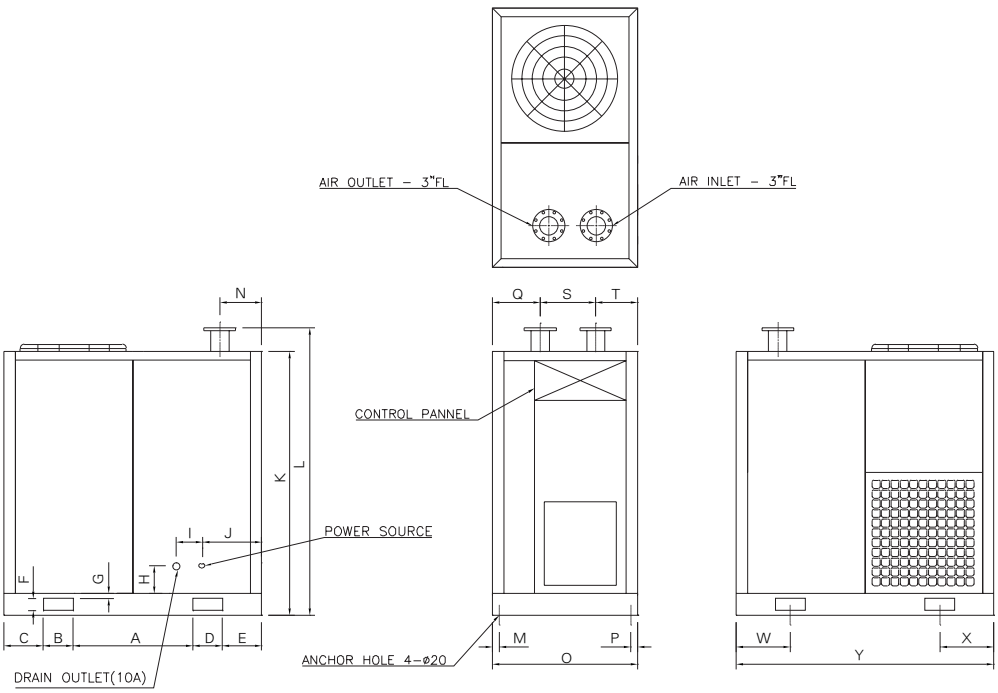

Model	A	B	C	D	E	F	G	H	I	J	K	L	N	M	O	P	Q	S	T	W	Y	X
TAD 150 ~ 200	800	200	250	200	250	80	20	125	100	330	1700	1800	300	15	900	15	350	300	350	350	1700	350
TAD 300 ~ 400	1000	200	300	200	300	80	20	125	100	330	1700	1800	300	25	1000	25	350	300	350	400	2000	400

TAD500 ~ 750 Dimensions

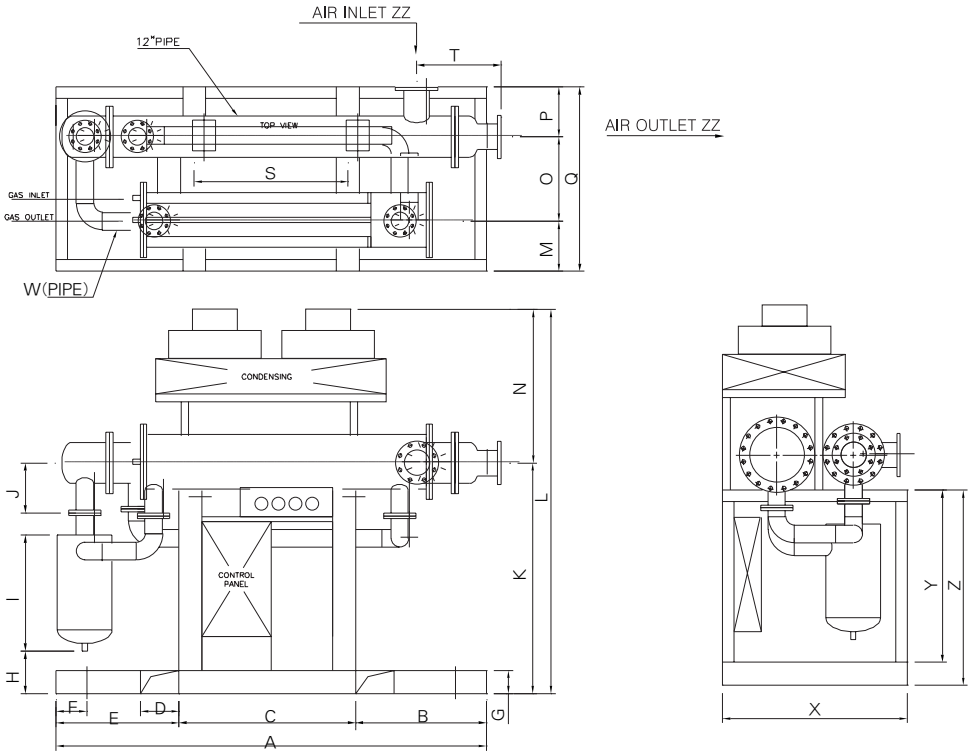

Model	A	B	C	D	E	F	G	H	I	J	K	L	N	M	O	P	Q	S	T	W	Y	X	Z	ZZ
TAD 500	2800	850	1150	250	800	200	150	300	750	325	1500	2500	1000	325	550	325	1200	1000	550	5″	1122	1200	1272	6″
TAD 600	2800	850	1150	250	800	200	150	300	750	325	1500	2500	1000	325	550	325	1200	1000	550	5″	1122	1200	1272	6″
TAD 750	2800	850	1150	250	800	200	150	300	750	325	1500	2500	1000	325	550	325	1200	1000	550	6″	1122	1200	1272	8″

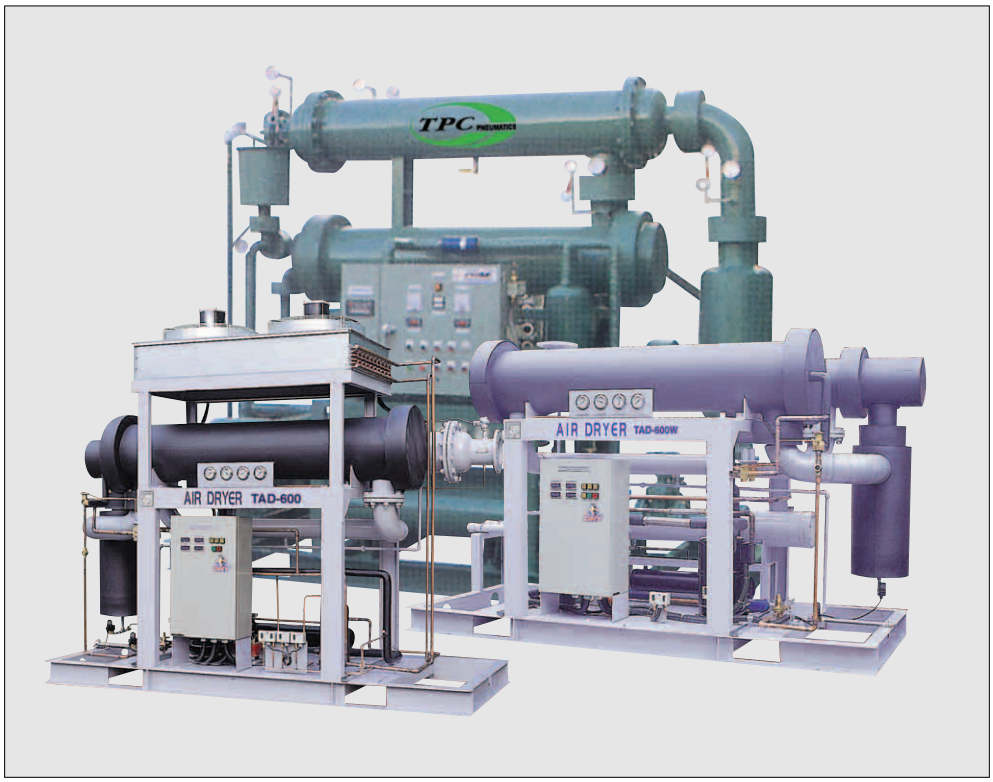

Accessories

- Metric One-Touch Fittings
  Series SQ D-3
- Two Touch Fittings
  Series SQ2 ..... D-12
- Speed Controller With One-Touch Fittings
  Direct Connection Type
  Series SP D-13
- Speed Controller / Threaded Elbow Type(Metal Version)
  Series SPM D-15
- Polyurethane Tubing
  Series ST D-19
- Silencer
  Series SN D-20
- Floating Joint
  Series SF D-22
- Auto Switch
  Series W1 · W2 · W3 · W4 · W5 · W6 · W7 ..... D-25
- Mini Auto Switch
  Series W8 · W9 ..... D-31
- Pressure Switch
  Series SPS D-33
- Positioner
  Series TPC-1000 ..... D-36
  Series TPC-1200 ..... D-39

Metric One-Touch Fittings

		Applicable tube material	Applicable tube O.D (mm)						With Sealant
				ø4	ø6	ø8	ø10	ø12	
SQH		Nylon Soft Nylon Polyurethane	M5	●	●				●
			1/8	●	●	●	●		●
			1/4	●	●	●	●	●	●
			3/8		●	●	●	●	●
			1/2			●	●	●	●
			No	●	●	●	●	●	
SQL		Nylon Soft Nylon Polyurethane	M5	●	●				●
			1/8	●	●	●	●		●
			1/4	●	●	●	●	●	●
			3/8		●	●	●	●	●
			1/2			●	●	●	●
			No	●	●	●	●	●	
SQT		Nylon Soft Nylon Polyurethane	M5	●	●				●
			1/8	●	●	●	●		●
			1/4	●	●	●	●	●	●
			3/8		●	●	●	●	●
			1/2			●	●	●	●
			No	●	●	●	●	●	
SQY		Nylon Soft Nylon Polyurethane	M5	●	●				●
			1/8	●	●	●	●		●
			1/4	●	●	●	●	●	●
			3/8		●	●	●	●	●
			1/2			●	●	●	●
			No	●	●	●	●	●	
SQU		Nylon Soft Nylon Polyurethane	M5	●	●				●
			1/8	●	●	●	●		●
			1/4	●	●	●	●	●	●
			3/8		●	●	●	●	●
			1/2			●	●	●	●
			No			●	●	●	
SQW		Nylon Soft Nylon Polyurethane	M5	●	●				●
			1/8	●	●	●	●		●
			1/4	●	●	●	●	●	●
			3/8		●	●	●	●	●
			1/2			●	●	●	●
			No	●	●	●	●	●	
SQV		Nylon Soft Nylon Polyurethane	M5	●	●				●
			1/8	●	●	●			●
			1/4		●	●			●
			3/8			●	●	●	●
			1/2				●	●	●
SQF		Nylon Soft Nylon Polyurethane	M5						
			1/8	●	●	●	●		
			1/4	●	●	●	●	●	
			3/8		●	●	●	●	
			1/2			●	●	●	
SQE		Nylon Soft Nylon Polyurethane	M5						
			1/8	●	●	●			
			1/4	●	●	●	●	●	
			3/8			●	●	●	
			1/2					●	
			No	●	●	●	●	●	

Series SQ

Tube/Metric, Thread/M, Rc(PT)

● **Connection and Disconnection of Tubing**
Tube and joint are completly joined by inserting the tube.
They are also easily separated within 1~2 seconds by pressing down on the sleeve with fingers and pulling the tube, without any tools.

● **Easy Piping in a Narrow Space**
Hex wrenches can be used for piping the SQH-T type 4, 6, 8 sizes.
Seal treated screw makes operation simple.
(Screw coated with CHEMI Seal)

How to Order

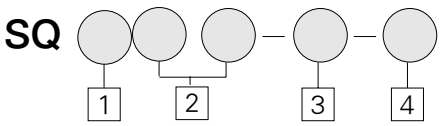

1 Series

2 Tube Size
04 : ϕ4
06 : ϕ6
08 : ϕ8
10 : ϕ10
12 : ϕ12

3 Port Size
01 : PT(R)1/8
02 : PT(R)1/4
03 : PT(R)3/8
04 : PT(R)1/2

4 Option
Blank : Standard Type
X2 : Copper-Free

Structures

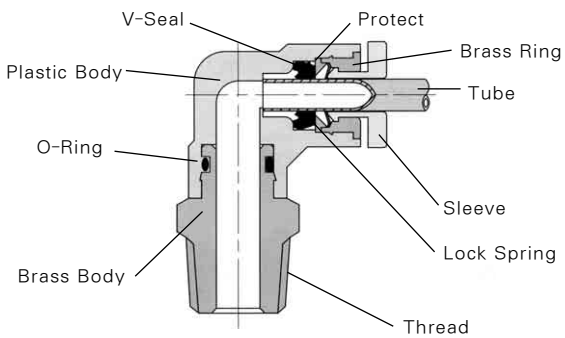

Installation Torque

Thread Size	Torque/kg • cm
PT 1/8	70~90
PT 1/4	120~140
PT 3/8	220~240
PT 1/2	280~300
M5	12

Specifications

Fluid	Air
Max.operating pressure	9.9 kgf/cm² {990 KPa}
Proof pressure	12.5 kgf/cm² {1.250 KPa}
Ambient and fluid temperature	0~60℃(32~140°F)

Dimensions

Male Connector

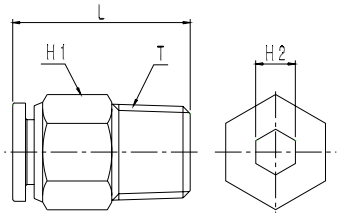

SQH Type

Unit: mm

Model	Tube size	T(Thread)	L	H1	H2
SQH04-M5A	04	M5	21	ø10	2
SQH04-M5	04	M5	21	14	2
SQH04-01S	04	PT1/8	18.9	10	2
SQH04-02S	04	PT1/4	20.4	10	2.5
SQH06-M5A	06	M5	21.3	12	2
SQH06-M5	06	M5	21.3	14	2
SQH06-01S	06	PT1/8	20.9	17	4
SQH06-02S	06	PT1/4	22.9	12	4
SQH06-03S	06	PT3/8	22.9	12	4
SQH08-01S	08	PT1/8	25.9	14	4
SQH08-02S	08	PT1/4	24.9	14	6
SQH08-03S	08	PT3/8	22.9	17	6
SQH08-04S	08	PT1/2	26.7	22	6
SQH10-01S	10	PT1/8	28.5	17	ø5
SQH10-02S	10	PT1/4	29.8	17	ø6
SQH10-03S	10	PT3/8	26.3	17	ø8
SQH10-04S	10	PT1/2	26.1	22	ø8
SQH12-02S	12	PT1/4	33.3	19	ø8
SQH12-03S	12	PT3/8	30.7	19	ø10
SQH12-04S	12	PT1/2	31.9	22	ø10

Dimensions

Male Elbow

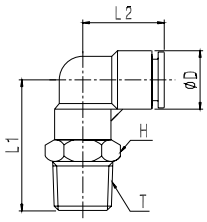

SQL Type

Unit: mm

Model	Tube size	T (Thread)	D	L1	L2	H
SQL04-M5	04	M5	10.2	10.2	17	8
SQL04-01S	04	PT1/8	10.2	10.2	17.1	10
SQL04-02S	04	PT1/4	10.2	10.2	17.1	14
SQL06-M5	06	M5	12.6	12.6	18	8
SQL06-01S	06	PT1/8	12.6	12.6	18.4	12
SQL06-02S	06	PT1/4	12.6	12.6	18.4	14
SQL06-03S	06	PT3/8	12.6	12.6	18.4	17
SQL08-01S	08	PT1/8	14.7	14.7	20.4	14
SQL08-02S	08	PT1/4	14.7	14.7	20.4	14
SQL08-03S	08	PT3/8	14.7	14.7	20.4	17
SQL08-04S	08	PT1/2	14.7	14.7	20.4	21
SQL10-01S	10	PT1/8	17.6	17.6	23.9	17
SQL10-02S	10	PT1/4	17.6	17.6	23.9	17
SQL10-03S	10	PT3/8	17.6	17.6	23.9	17
SQL10-04S	10	PT1/2	17.6	17.6	23.9	21
SQL12-02S	12	PT1/4	20	20	24.9	19
SQL12-03S	12	PT3/8	20	20	24.9	19
SQL12-04S	12	PT1/2	20	20	24.9	21

Dimensions

Branch Tee

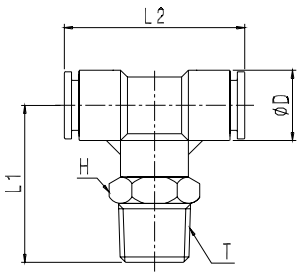

SQT Type

Unit: mm

Model	Tube size	T (Thread)	D	L1	L2	H
SQT04-M5	04	M5	10.2	22.4	34.2	10
SQT04-01S	04	PT1/8	10.2	24.9	34.2	10
SQT04-02S	04	PT1/4	10.2	27.9	34.2	14
SQT06-M5	06	M5	12.6	23.5	36.8	12
SQT06-01S	06	PT1/8	12.6	26	36.8	12
SQT06-02S	06	PT1/4	12.6	29	36.8	14
SQT06-03S	06	PT3/8	12.6	30	36.8	17
SQT08-01S	08	PT1/8	14.7	27	40.8	14
SQT08-02S	08	PT1/4	14.7	29.9	40.8	14
SQT08-03S	08	PT3/8	14.7	30.9	40.8	17
SQT08-04S	08	PT1/2	14.7	35.4	40.8	21
SQT10-01S	10	PT1/8	17.6	30	47.8	17
SQT10-02S	10	PT1/4	17.6	33	47.8	17
SQT10-03S	10	PT3/8	17.6	34	47.8	17
SQT10-04S	10	PT1/2	17.6	38.5	47.8	21
SQT12-02S	12	PT1/4	20	35	49.8	19
SQT12-03S	12	PT3/8	20	36	49.8	19
SQT12-04S	12	PT1/2	20	40.5	49.8	21

Dimensions

Straight Reducer

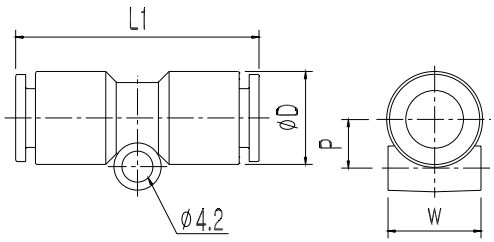

SQH Type

Unit: mm

Model	Tube size	D	L	P	W
SQH04-00	04	10.2	31.8	5.8	10.2
SQH06-00	06	12.6	33.6	6.6	12.6
SQH08-00	08	14.7	35.8	7.6	14.7
SQH10-00	10	17.6	41.2	8.9	17.6
SQH12-00	12	20	43.2	9.8	20

Dimensions

Union Elbow

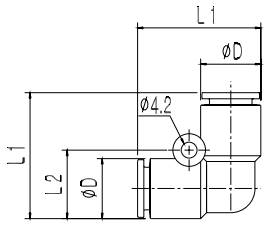

SQL Type

Unit: mm

Model	Tube size	D	L1	L2
SQL04-00	04	10.2	22.2	12.2
SQL06-00	06	12.6	24.6	14.7
SQL08-00	08	14.7	27.8	16.8
SQL10-00	10	17.6	32.7	19.6
SQL12-00	12	20	35.4	22

Dimensions

Union Tee

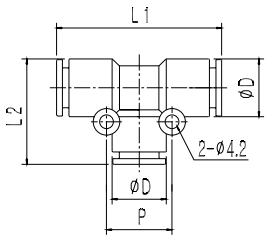

SQT Type

Unit: mm

Model	Tube size	D	L1	L2	P
SQT04-00	04	10.2	34.2	22.2	14.2
SQT06-00	06	12.6	36.6	24.6	16.8
SQT08-00	08	14.7	40.8	27.8	18.8
SQT10-00	10	17.6	47.8	32.7	21.6
SQT12-00	12	20	46.8	34.9	24

Dimensions

Male Run Tee

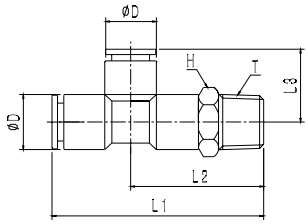

SQY Type

Unit: mm

Model	Tube size	T (Thread)	D	L1	L2	L3	H
SQY04-M5	04	M5	10.2	39.4	22.3	17.1	10
SQY04-01S	04	PT1/8	10.2	41.9	24.8	17.1	10
SQY04-02S	04	PT1/4	10.2	44.9	27.8	17.1	14
SQY06-M5	06	M5	12.6	41.8	23.5	18.3	12
SQY06-01S	06	PT1/8	12.6	44.3	26	18.3	12
SQY06-02S	06	PT1/4	12.6	47.3	29	18.3	14
SQY06-03S	06	PT3/8	12.6	48.3	30	18.3	17
SQY08-01S	08	PT1/8	14.7	47.4	27	20.5	14
SQY08-02S	08	PT1/4	14.7	50.3	29.9	20.5	14
SQY08-03S	08	PT3/8	14.7	51.3	30.9	20.5	17
SQY08-04S	08	PT1/2	14.7	55.8	35.4	20.5	21
SQY10-01S	10	PT1/8	17.6	53.9	30	23.9	17
SQY10-02S	10	PT1/4	17.6	56.9	33	23.9	17
SQY10-03S	10	PT3/8	17.6	57.9	34	23.9	17
SQY10-04S	10	PT1/2	17.6	62.4	38.5	23.9	21
SQY12-02S	12	PT1/4	20	59.9	35	24.9	19
SQY12-03S	12	PT3/8	20	60.9	36	24.9	19
SQY12-04S	12	PT1/2	20	65.4	40.5	24.9	21

Dimensions

Female Union

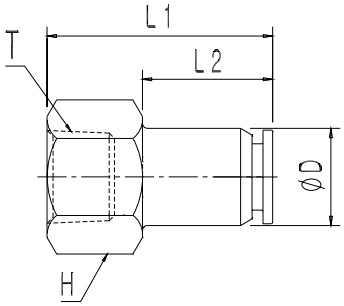

SQF Type

Unit: mm

Model	Tube size	T (Thread)	D	L1	L2	H
SQF04-01	04	PT1/8	10.2	24	14	14
SQF04-02	04	PT1/4	10.2	27	13.5	17
SQF06-01	06	PT1/8	12.6	26	16	14
SQF06-02	06	PT1/4	12.6	29	15	17
SQF06-03	06	PT3/8	12.6	30.1	15.1	21
SQF08-01	08	PT1/8	14	28.1	18.1	17
SQF08-02	08	PT1/4	14	31.1	17.2	17
SQF08-03	08	PT3/8	14	32.1	17.1	21
SQF08-04	08	PT1/2	14	36	17	24
SQF10-01	10	PT1/8	16.4	30.3	20.3	17
SQF10-02	10	PT1/4	16.4	33.3	19.4	17
SQF10-03	10	PT3/8	16.4	34.3	19.3	21
SQF10-04	10	PT1/2	16.4	37.3	18.3	24
SQF12-02	12	PT1/4	19	35.9	22	21
SQF12-03	12	PT3/8	19	36.9	22	21
SQF12-04	12	PT1/2	19	39.9	20.9	24

Dimensions

Bulkhead Female Union

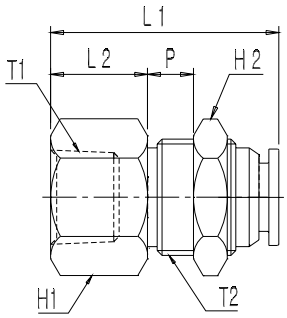

SQE Type

Unit: mm

Model	Tube size	T (Thread)	T2 (Thread)	L1	L2	H1	H2	P
SQE04-01	04	PT1/8	12×1	24	10	14	14	4.5
SQE06-01	06	PT1/8	14×1	26	10	17	17	6.5
SQE06-02	06	PT1/4	14×1	29	13	17	17	6.5
SQE08-01	08	PT1/8	16×1	28.1	10	19	19	7.5
SQE08-02	08	PT1/4	16×1	31.1	13.9	19	19	6.5
SQE08-03	08	PT3/8	16×1	32.1	15	19	19	6.5
SQE10-02	10	PT1/4	20×1	33.3	13.9	24	24	9
SQE10-03	10	PT3/8	20×1	34.3	15	24	24	9
SQE12-02	12	PT1/4	22×1	35.9	13.9	26	26	10.5
SQE12-03	12	PT3/8	22×1	36.9	14.9	26	26	10.5
SQE12-04	12	PT1/2	22×1	39.9	19	26	26	9.5

Dimensions

Bulkhead Union

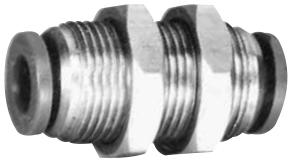

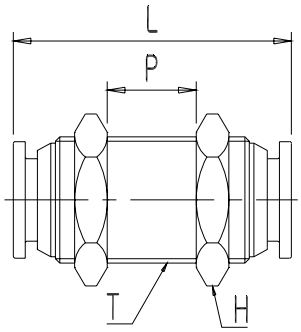

SQE Type

Unit: mm

Model	Tube size	T (Thread)	L	H	H
SQE04-00	04	12×1	30.5	14	12.4
SQE06-00	06	14×1	31.5	17	13.5
SQE08-00	08	16×1	34.2	19	14.2
SQE10-00	10	20×1	38.6	24	18.6
SQE12-00	12	22×1	40.6	26	16.9

Dimensions

Extended Male Elbow

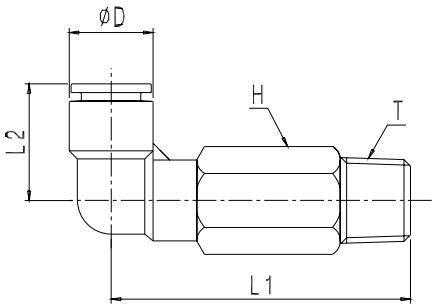

SQW Type

Unit: mm

Model	Tube size	T (Thread)	D	L1	L2	H
SQW04-M5	04	M5	10.2	29.7	17	8
SQW04-01S	04	PT1/8	10.2	43.9	17.1	10
SQW04-02S	04	PT1/4	10.2	41.9	17.1	14
SQW06-M5	06	M5	12.6	31.8	18	8
SQW06-01S	06	PT1/8	12.6	40	18.4	12
SQW06-02S	06	PT1/4	12.6	43	18.4	14
SQW06-03S	06	PT3/8	12.6	44	18.4	17
SQW08-01S	08	PT1/8	14.7	42.9	20.4	14
SQW08-02S	08	PT1/4	14.7	45.9	20.4	14
SQW08-03S	08	PT3/8	14.7	46.9	20.4	17
SQW08-04S	08	PT1/2	14.7	51.4	20.4	21
SQW10-01S	10	PT1/8	17.6	49	23.9	17
SQW10-02S	10	PT1/4	17.6	52	23.9	17
SQW10-03S	10	PT3/8	17.6	54	23.9	17
SQW10-04S	10	PT1/2	17.6	59.5	23.9	21
SQW12-02S	12	PT1/4	20	57	24.9	19
SQW12-03S	12	PT3/8	20	58	24.9	19
SQW12-04S	12	PT1/2	20	61.5	24.9	21

Dimensions

Union "Y"

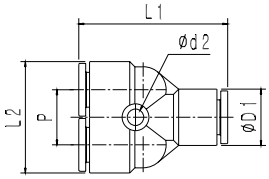

SQU Type

Unit: mm

Model	Tube size	D1	D2	L1	L2	P
SQU04-00	04	10.2	3.5	33.8	20.4	10.2
SQU06-00	06	12.6	3.2	35.1	25	12.4
SQU08-00	08	14.7	4.3	39.3	29.1	14.4
SQU10-00	10	17.6	4.3	45.2	34.8	17.2
SQU12-00	12	20	4.3	47.3	39.4	19.4

Dimensions

"Y" Reducer

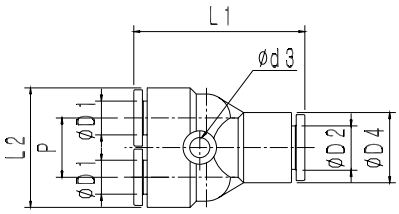

QU Type

Unit: mm

Model	Tube size		P	L1	L2	D3	D4
	D1	D2					
SQU04-06	04	06	10.2	34.4	20.4	3.5	12.6
SQU06-08	06	08	12.4	36.2	25	4.2	14.7
SQU08-10	08	10	14.4	41	29.1	4.3	17.6
SQU10-12	10	12	17.2	46.2	46.2	4.3	20

Dimensions

Braneh "Y"

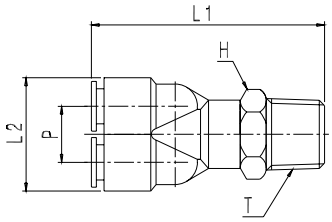

SQU Type

Unit: mm

Model	Tube size	T (Thread)	L1	L2	P	H
SQU04-M5	04	M5	39	20.4	10.1	10
SQU04-01S	04	PT1/8	41.5	20.4	10.1	14
SQU04-02S	04	PT1/4	44.5	20.4	10.1	10
SQU06-M5	06	M5	40	24.8	12.2	12
SQU06-01S	06	PT1/8	42.5	24.8	12.2	14
SQU06-02S	06	PT1/4	45.5	24.8	12.2	17
SQU06-03S	06	PT3/8	46.5	24.8	12.2	12
SQU08-01S	08	PT1/8	44.8	29.1	14.4	14
SQU08-02S	08	PT1/4	47.7	29.1	14.4	14
SQU08-03S	08	PT3/8	48.7	29.1	14.4	17
SQU08-04S	08	PT1/2	53.2	29.1	14.4	21
SQU10-01S	10	PT1/8	49.9	34.8	17.2	17
SQU10-02S	10	PT1/4	52.9	34.8	17.2	17
SQU10-03S	10	PT3/8	53.9	34.8	17.2	17
SQU10-04S	10	PT1/2	58.4	34.8	17.2	21
SQU12-02S	12	PT1/4	53.9	39.4	19.4	19
SQU12-03S	12	PT3/8	54.9	39.4	19.4	19
SQU12-04S	12	PT1/2	59.4	39.4	19.4	21

Dimensions

Straight Reducer

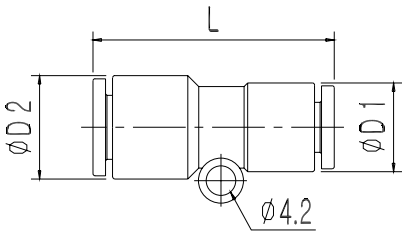

SQH Type

Unit: mm

Model	Tube size (D1)	Tube size (D1)	L
SQH04-06	04	06	33.1
SQH06-08	06	08	34.7
SQH08-10	08	10	38
SQH10-12	10	12	41.2

Dimensions

Plug-in Elbow

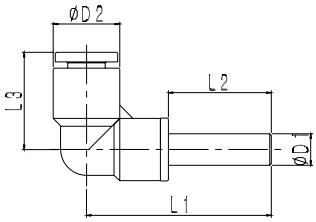

SQL Type

Unit: mm

Model	Tube size	D1	D2	L1	L2	L3
SQL04-99	04	4	10.2	31.6	17.2	17.1
SQL06-99	06	6	12.6	35	19.5	18.4
SQL08-99	08	8	14.7	38.5	22	20.4
SQL10-99	10	10	17.6	43.5	23.5	23.9
SQL12-99	12	12	20	49	27	24.9

Dimensions

Plug-in Straight

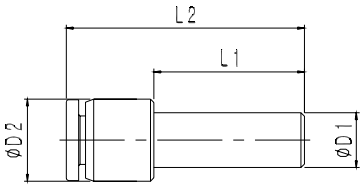

SQJ Type

Unit: mm

Model	Tube size	D1	D2	L1	L2
SQJ04-06	04	6	10	19.5	31.5
SQJ04-08	04	8	10	21	33
SQJ06-08	06	8	12	22	35
SQJ06-10	06	10	12	23.5	36.5
SQJ06-12	06	12	12	27	40
SQJ08-10	08	10	14	26.5	36.5
SQJ08-12	08	12	14	27	41.1
SQJ10-12	10	12	17	27	43.3

Dimensions

Universal Male Elbow

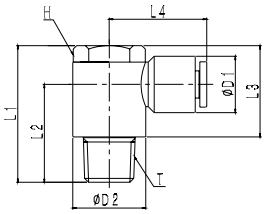

SQV Type

Unit: mm

Model	Tube size	T (Thread)	D1	D2	L1	L2	L3	L4	H
SQV04-M5	04	M5	10.2	10	21.2	13.7	16	19.3	8
SQV04-01S	04	PT1/8	10.2	15	29.3	20.3	21.7	21.8	14
SQV04-02S	04	PT1/4	10.2	19	35.6	26.3	23.8	23.8	17
SQV06-M5	06	M5	12.6	10	21.2	13.7	16	19.8	8
SQV06-01S	06	PT1/8	12.6	15	29.3	20.3	21.7	22.3	14
SQV06-02S	06	PT1/4	12.6	19	35.6	26.3	23.8	24	17
SQV06-03S	06	PT3/8	12.6	20	40.6	29.5	28.5	26.8	21
SQV08-01S	08	PT1/8	14.7	15	29.3	19.5	21.7	23.4	14
SQV08-02S	08	PT1/4	14.7	19	35.6	25.5	23.8	25.4	17
SQV08-03S	08	PT3/8	14.7	24	40.6	29.7	28.5	27.8	21
SQV08-04S	08	PT1/2	14.7	28	41.3	25.8	26	29.9	24
SQV10-02S	10	PT1/4	17.6	19	39.6	27.5	23.8	28.2	21
SQV10-03S	10	PT3/8	17.6	24	40.5	28.5	28.6	30.1	21
SQV10-04S	10	PT1/2	17.6	28	41.3	25.8	26	31.3	24
SQV12-02S	12	PT1/4	20	24.4	39.6	26.1	28.4	31.3	21
SQV12-03S	12	PT3/8	20	24.4	40.5	27.1	28.4	31.3	21
SQV12-04S	12	PT1/2	20	28	41.3	25.8	26	32.3	24

Dimensions

"+" Reducer

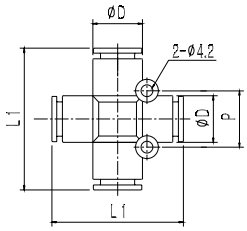

SQZ Type

Unit: mm

Model	Tube size	D	L	P
SQZ04-00	04	10.2	34.2	14.2
SQZ06-00	06	12.6	36.6	16.8
SQZ08-00	08	14.7	40.8	18.8
SQZ10-00	10	17.6	47.8	21.6
SQZ12-00	12	20	50.8	24

Dimensions

Plug-in "Y"

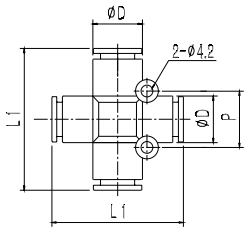

SQU Type

Unit: mm

Model	Tube size	D	L1	L2	L3	P
SQU04-99	04	4	39.1	49.5	20.4	10.2
SQU06-99	06	6	40.4	52.6	25	12.4
SQU08-99	08	8	44.8	57.3	29.1	14.4
SQU10-99	10	10	52.7	65.7	34.8	17.2
SQU12-99	12	12	54.8	69.8	39.4	19.4

Dimensions

Union I

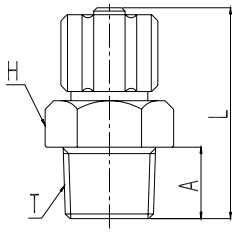

SQ2H Type

Unit: mm

Model	Tube size	T (Thread)	L	A	H
SQ2H04-01	04	PT1/8	24.6	8	12
SQ2H06-01	06	PT1/8	27.7	8	12
SQ2H06-02	06	PT1/4	31.7	11	16
SQ2H08-01	08	PT1/8	27.7	8	13
SQ2H08-02	08	PT1/4	31.7	11	16
SQ2H08-03	08	PT3/8	33	12	18
SQ2H10-02	10	PT1/4	32.2	11	17
SQ2H10-03	10	PT3/8	33.4	12	17
SQ2H12-02	12	PT1/4	34.9	11	17
SQ2H12-03	12	PT3/8	36.1	12	19

Dimensions

Union L

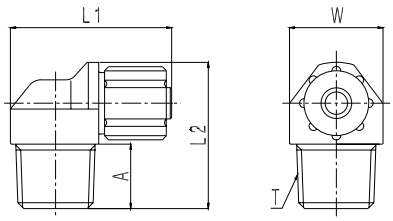

SQ2L Type

Unit: mm

Model	Tube size	T (Thread)	L1	L2	A	W
SQ2L04-01	04	PT1/8	23.6	20	8	12
SQ2L06-01	06	PT1/8	26.7	20	8	12
SQ2L06-02	06	PT1/4	30.1	23	11	16
SQ2L08-01	08	PT1/8	28.7	22	8	14
SQ2L08-02	08	PT1/4	30.1	25	11	16
SQ2L08-03	08	PT3/8	32.7	26	12	18
SQ2L10-02	10	PT1/4	30.6	27	11	17
SQ2L10-03	10	PT3/8	33.2	28	12	18
SQ2L12-02	12	PT1/4	35.9	30	11	19
SQ2L12-03	12	PT3/8	36.9	31	12	19

Dimensions

Union T

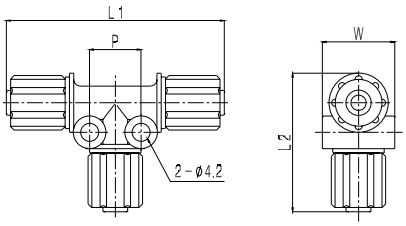

SQ2T Type

Unit: mm

Model	Tube size	L1	L2	W	P
SQ2T04-00	04	40.8	23.4	11	10
SQ2T06-00	06	48.8	30.3	14	12
SQ2T08-00	08	50.8	32.3	17	12
SQ2T10-00	10	51.5	36	20	13
SQ2T12-00	12	57.9	40.3	22	14.5

Series SP

Speed Controller with One-Touch Fittings Direct Connection Type

FEATURES

- It has excellent air flow characteristics because fine adjustment of air flow is easy.
- Nylon tube and urethane tube can be used in common.
- Easy control of air flow speed and rate.
- Easy set up of connecting direction.
- Seal treated screw makes operation simple (Screw coated with CHEMI Seal).
- Sleeve color makes application clear.

How to Order

SP (2)(2)(0) 1F — (02) — (06) — ( )

1 2 3 4 5 6 7

1 Body Size
- 1 : M5
- 2 : 1/8, 1/4
- 3 : 3/8
- 4 : 1/2

2 Type
- 2 : Elbow

3 Controlled Method
- 0 : Meter-out
- 1 : Meter-in

4 With One-touch Fittings

5 Port Size
- M5 : M5X0.8
- 01 : R(PT)1/8
- 02 : R(PT)1/4
- 03 : R(PT)3/8
- 04 : R(PT)1/2

6 Applicable Tube O.D.
- 04 : ø4
- 06 : ø6
- 08 : ø8
- 10 : ø10
- 12 : ø12

7 Option
- Blank : Standard Type
- N : Sealant

8 Option
- Blank : Standard Type
- N : Copper-Free

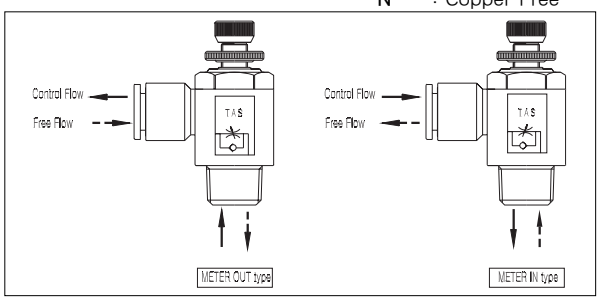

Structures

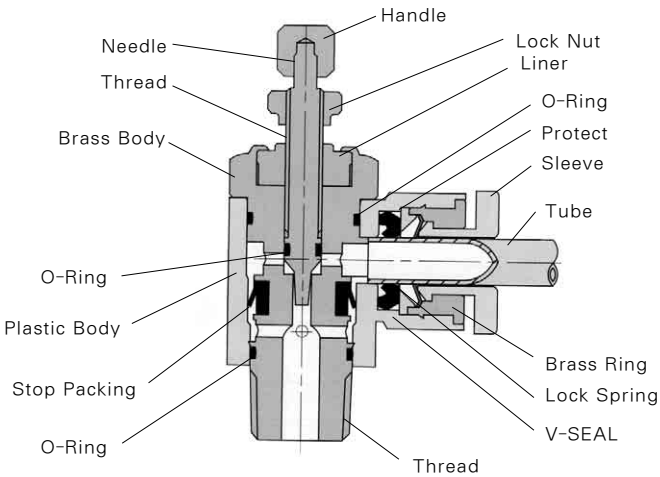

Specifications

Proof Pressure	10.5 kgf/cm² {1,050 kPa}
Max. Operating Pressure	7 kgf/cm² {700 kPa}
Min. Operating Pressure	1 kgf/cm² {100 kPa}
Ambient and Fluid Temperature	5~60℃
Number of Needle Rotation	9 Turns

Dimensions

Elbow Type

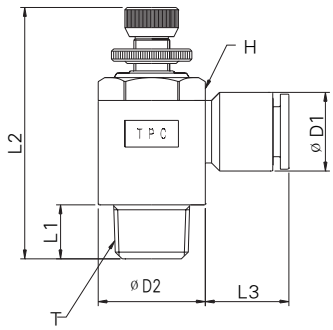

Unit: mm

Model	Tube siwze	T (Thread)	H	L1	L2		L3	D1	D2
					Min.	Max.			
SP1201F-M5-04	4	M5×0.8	8	4.8	30.4	33.7	14.8	10.2	10
SP1201F-M5-06	6	M5×0.8	8	4.8	30.4	33.7	14.8	12.6	10
SP2201F-01-04S	4	PT1/8	14	8	40.3	46.4	14.3	10.2	15
SP2201F-02-04S	4	PT1/4	17	12.2	45.3	49.4	14.3	10.2	19
SP2201F-01-06S	6	PT1/8	14	8	40.3	46.4	14.8	12.6	15
SP2201F-02-06S	6	PT1/4	17	12.2	45.3	49.4	14.8	12.6	19
SP2201F-01-08S	8	PT1/8	14	8	40.3	46.4	15.9	14.7	15
SP2201F-02-08S	8	PT1/4	17	12.2	45.3	49.4	15.9	14.7	19
SP2201F-02-10S	10	PT1/4	17	12.2	45.3	49.4	18.1	17.6	19
SP3201F-02-06S	6	PT1/4	21	11.6	51.4	57.5	14.8	12.6	19
SP3201F-03-06S	6	PT3/8	21	12.6	52.4	58.5	14.8	12.6	24
SP3201F-02-08S	8	PT1/4	21	11.6	51.4	57.5	15.9	14.7	19
SP3201F-03-08S	8	PT3/8	21	12.6	52.4	58.5	15.9	14.7	24
SP3201F-02-10S	10	PT1/4	21	11.6	51.4	57.5	18.1	17.6	19
SP3201F-03-10S	10	PT3/8	21	12.6	52.4	58.5	18.1	17.6	24
SP3201F-03-12S	12	PT3/8	21	12.6	52.4	58.5	19.1	20	24
SP4201F-04-08S	8	PT1/2	24	15.5	56.3	63.9	15.9	14.7	28
SP4201F-04-10S	10	PT1/2	24	15.5	56.3	63.9	17.3	17.6	28
SP4201F-04-12S	12	PT1/2	24	15.5	56.3	63.9	18.3	20	28

Series SPM

Speed Controller/Threaded Elbow Type(Metal Version)

- Minimizes Installation Time and Cost
- Body Swivels 360°
- Speed Can be Accurately Controlled Even at Low Speeds
- Constant Speed is Easily Set

Symbol

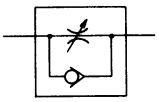

How to Order

SPM 1 2 0

1 2 3 4

1 Speed Controller
(Threaded Elbow Type)

2 Port Size
1 : Rc(PT)1/8
2 : Rc(PT)1/4
3 : Rc(PT)3/8
4 : Rc(PT)1/2

3 Type
2 : Direct connection type

4 Controlled Method
0 : Meter-Out
1 : Meter-In

Specifications

Model			SPM12□	SPM22□	SPM32□	SPM42□
Port Size		Cylinder	Rc(PT)1/8	Rc(PT)1/4	Rc(PT)3/8	Rc(PT)1/2
		Tube	Rc(PT)1/8	Rc(PT)1/4	Rc(PT)3/8	Rc(PT)1/2
Proof Pressure			10.5 kgf/cm²{1.05MPa}			
Max. Operating Pressure			7 kgf/cm²{0.7MPa}			
Min. Operating Pressure			1 kgf/cm²{0.1MPa}			
Ambient and Fluid Temperature			5~60℃			
Number of Needle Rotations			8 turns			
Weight (lbf)			36	74	141	238
Flow	Free	Flow Rate (N l /min)	280	420	840	1680
		Effective Orifice(mm²)	4	6.5	13	25.8
	Control	Flow Rate (N l /min)	190	240	840	1680
		Effective Orifice(mm²)	2.9	3.7	13	25.8

Dimensions

Casting Type

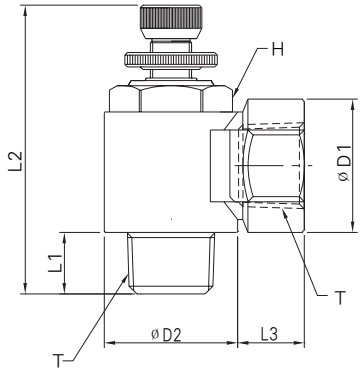

Unit: mm

Model	T (Thread)	H	L1	L2		L3	D1	D2
				Min.	Max.			
SPM120	PT1/8	14	8	40.3	46.4	9.2	15.7	15
SPM220	PT1/4	17	12.2	45.3	49.4	12	20	20
SPM320	PT3/8	21	12.6	52.4	58.5	13	26	26
SPM420	PT1/2	24	15.5	56.3	63.9	24.2	28.6	27.5
SPM121	PT1/8	14	8	40.3	46.4	9.2	15.7	15
SPM221	PT1/4	17	12.2	45.3	49.4	12	20	20
SPM321	PT3/8	21	12.6	52.4	58.5	13	26	26
SPM421	PT1/2	24	15.5	56.3	63.9	24.2	28.6	27.5

Flow Characteristics

SPM12□

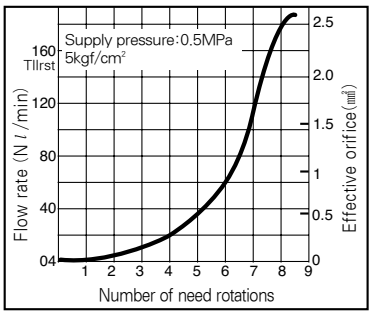

SPM22□

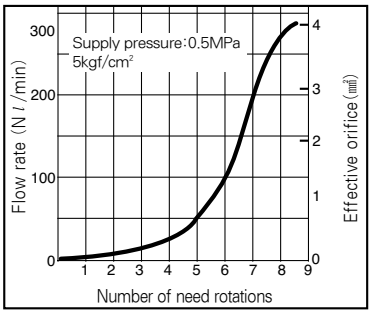

SPM32□

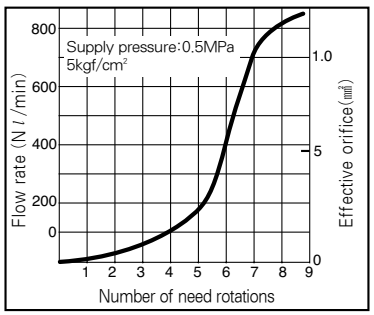

SPM42□

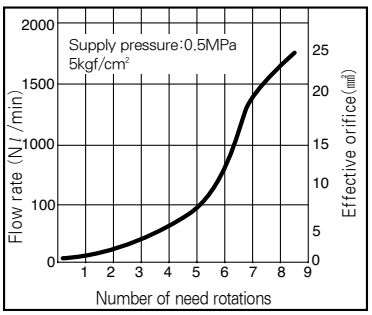

Structures

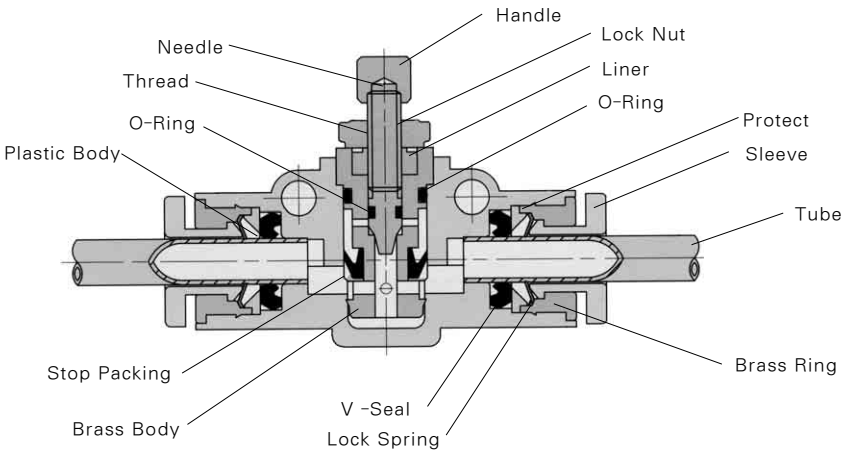

Dimensions

SP Type

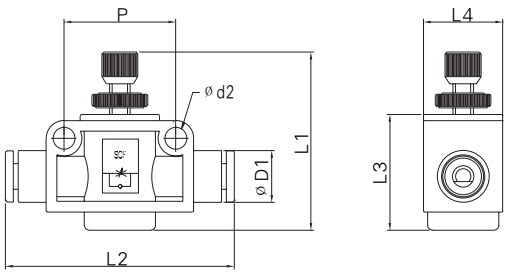

Unit: mm

Model	Tube size	L1		L2	L3	L4	D1	d2	P
		Min.	Max.						
SP100F-04	4	27.2	30.5	42	17.5	12.6	10.2	3.2	16
SP100F-06	6	27.2	30.5	43	17.5	12.6	12.6	3.2	16
SP200F-04	4	33	39.1	46	22.8	15.6	10.2	4.3	22
SP200F-06	6	33	39.1	46	22.8	15.6	12.6	4.3	22
SP205F-04	4	35.9	40	49.2	25.5	18.8	10.2	4.3	24
SP205F-06	6	35.9	40	50.2	25.5	18.8	12.6	4.3	24
SP205F-08	8	35.9	40	52.4	25.5	18.8	14.7	4.3	24
SP300F-06	6	41.7	47.8	54	29.5	23	12.6	4.3	28
SP300F-08	8	41.7	47.8	56	29.5	23	14.7	4.3	28
SP300F-10	10	41.7	47.8	61	29.5	23	17.6	4.3	28
SP300F-12	12	41.7	47.8	62.4	29.5	23	20	4.3	28

Series SP4000

Speed Controller Inline Type

- COMPACT SIZE SAVES SPACE
- SPEED SHALL BE ACCURATELY CONTROLLED EVEN AT LOW SPEED
- CONSTANT SPEED EASILY SET
- RETAINER PREVENTS ACCIDENTAL LOSS OF NEEDLE

Symbol

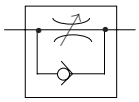

Fiow Characteristics

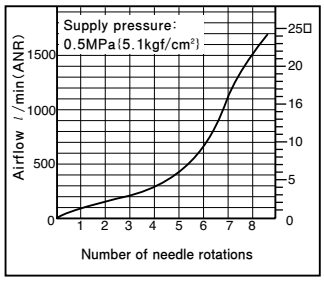

How to Order

SP 4 000 — ○ 02

1 2 3

1 Body Size
4 : 1/2

2 Port Size
02 : Rc(PT)1/4
03 : Rc(PT)3/8
04 : Rc(PT)1/2

Dimensions (Unit:mm)

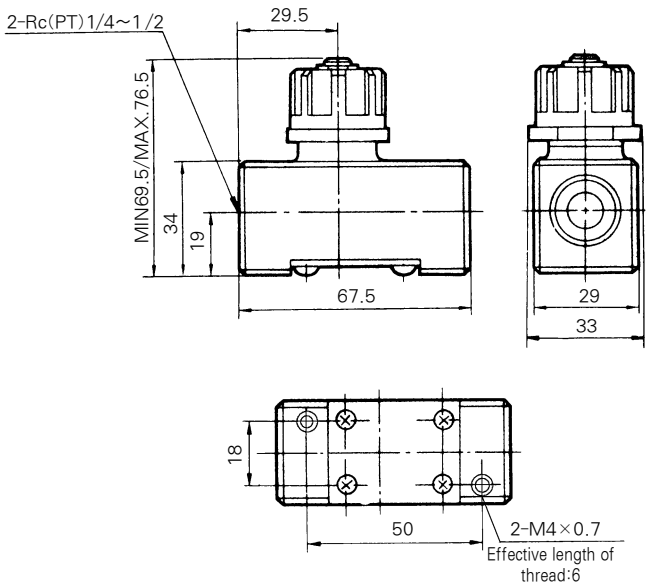

Specifications

Proof pressure	15 kgf/cm²{1.47MPa}
Max. operating pressure	9.9 kgf/cm²{0.97MPa}
Min. operating pressure	0.5 kgf/cm²{0.05MPa}
Ambient and fluid temperature	5~60℃
Number of needle rotations	8 turns

Series ST

Polyurethane Tubing

● For General Air Pressure Tubing

How to Order

ST0425 (1) BU (2) – 100 (3)

1 Indication of Tube Type

2 Color Indication
- B : Black
- BU : Blue
- Y : Yellow
- C : Clear

3 Tube Length
100m

Series Table

• □-100m

Description	Metric-size(series ST)							
	ST0402	ST0425	ST0604	ST0805	ST0855	ST1065	ST1208	ST1209
Tube O.Dmm	4	4	6	8	8	10	12	12
Tube I.Dmm	2	2.5	4	5	5.5	6.5	8	9
Black(B)	●	●	●	●	●	●	●	●
Blue(BU)	●	●	●	●	●	●	●	●
Yellow(Y)	●	●	●	●	●	●	●	●
Clear(C)	●	●	●	●	●	●	●	●

Polyurethane Tubing/ Burst Pressure Chracteristics Curve

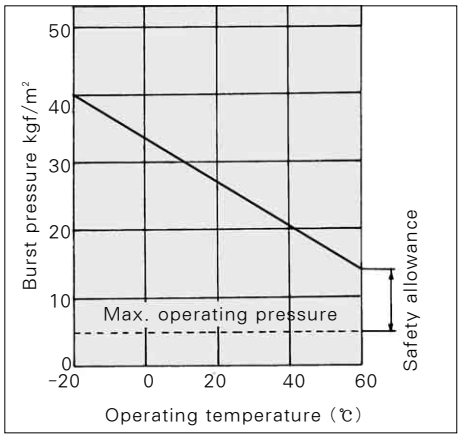

※ Taking safety allowance into consideration, 1/3 or less of burst pressure under temperature 60℃ is the max. operating pressure.

Specifications

Max. Operating Pressure	75 PSI (5kgf/cm²)				
Burst Pressure	Refer to burst pressure characterics curve.				
Note 1)Minimum Bending Radius Inch(mm)	0.39(10)	0.59(15)	0.79(20)	1.07(27)	1.38(35)
Operating Temperature	-20~60°C				
Material	Polyurethane				

Note 1)The value for bending radius is at a temperature of -21℃(-4°F)
(Reference) The inch sizes Ø5/32″ and Ø5/16″ are equivalent to Ø4 and Ø8 mm

Series SN

SILENCER

Flow Charateristics(Initial Conditions)

SN200 ~ 600

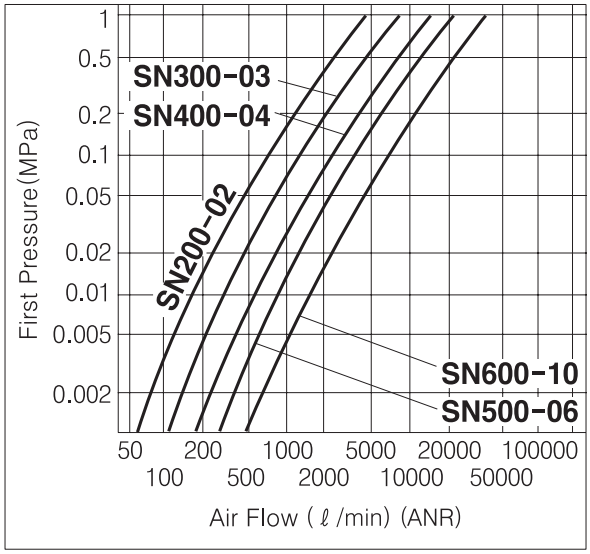

Noise Level(Initial Conditons)

SN200 ~ 600

Measure Condition : First pressure of electronic valve : 0.5MPa{5.1kgf/cm²}

Distance of measurement : SN200~500 → 1m, SN600 → 2m

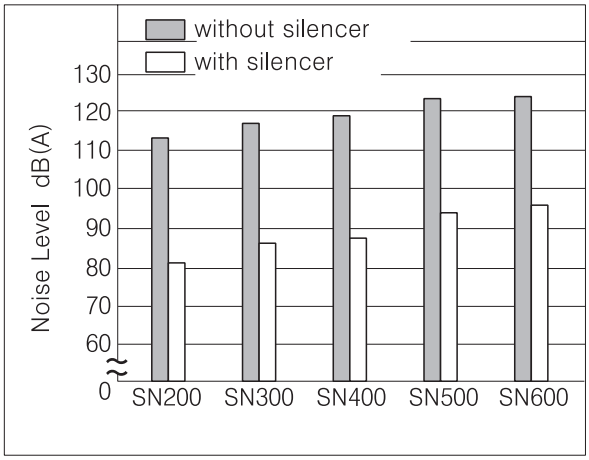

Model / Specification

No	Model	Port size (R)	Effective Orifice (mm²)	Noise Reduction (dB)	Weight (g)	Note
1	SN100-M5	M5	5	over 20	1	
2	SN120-M5		5	18	3.3	Sintered
3	SN100-01A	1/8	10	over 25	2	
4	SN100-01		15		4	
5	SN101-01		20	16	9.5	Sintered
6	SN110-01		35	21	20	
7	SN200-02	1/4	35	over 25	17	
8	SN300-03	3/8	60		25	
9	SN400-04	1/2	90		35	
10	SN500-06	3/4	200		70	
11	SN600-10	1	230		100	

Series SN□00
Standard Type

- Noise Reduction (over 30dB)
- Small air-space resistance
- Easy for mounting

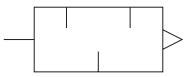

Specification

Fluid	Pressured Air
Max. Operating	1.0Mpa(10.2kgf/cm²)
Noise Reduction	30dB(A) over
Ambient and Fluid Temperature	5 ~ 60℃

※ It's possible to use silencer at -10 ~ 60℃ without Fluid Freezing.

Model

Model	Port size Rc		Effective sectional area (mm²)	Weight (gf)	Dimensions		
					A	B	D
SN100-M5	M5×0.8		5	1	18	8	-
SN100-01	1/8		10	2	41	15.5	10
SN100-01A			15	4	37	11	6
SN200-02	1/4		35	17	63	22	19
SN300-03	3/8		60	25	84	25	22
SN400-04	1/2		90	35	92	30	27
SN500	06	3/4	200	70	104	44	30
SN600	10	1	230	100	130	48	37

SN100 ~ 400

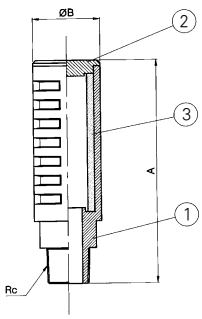

SN500 · 600

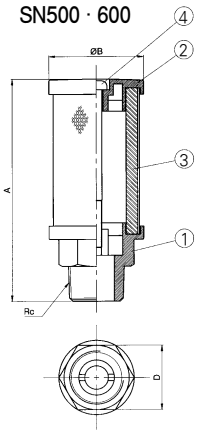

Parts List

No.	Part No.	Material	Note
1	BODY	Synthetic resin	
2	CAP	Synthetic resin	
3	ELEMENT	Synthetic resin	
4	BOLT	-	M6

Series SN
BC Sintered Body

Switable for mini and Pilot air exhaust parts.

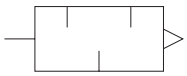

Specifications / Model

Spec. \ Model		SN101-01	SN110-01	SN120-M5
Port Size		R(PT) 1/8	R(PT) 1/8	M5
Noise Reduction dB(A)		16	21	18
Fluid		Air		
Max. Operating Pressure		1.0MPa (10.2kgf/cm²)		
Ambient and Fluid Temperature		5 ~ 150℃		
Effective Orifice(mm²)		20	35	5
Weight (g)		9.5	20	3.3
Dimension(mm)	A	22.5	38	17
	B	11	13	8

※ It's possible to use silencer at -10 ~ 150℃ without Fluid Freezing.

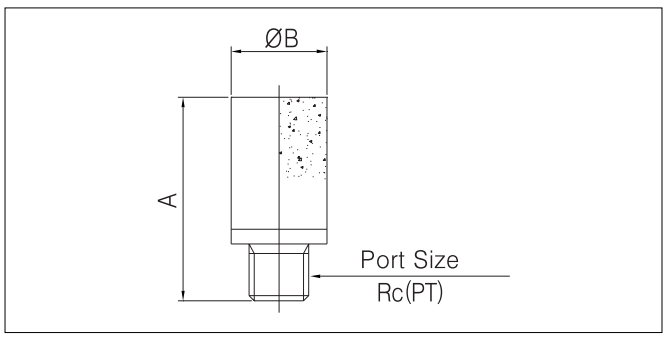

Floating Joint

Series SF

Bore size(Applicable Cylinder) : ø10, ø16, ø20, ø25, ø32, ø40, ø50, ø63, ø80, ø100, ø125, ø140, ø160

THE FLOATING JOINT ASSEMBLY PROTECTS CYLINDER INSTALLATIONS FROM ANGULAR AND LATERAL MISALIGNMENT

- ACCURATE CYLINDER ALIGNMENT NOT REQUIRED
- INSTALLATION TIME REDUCED
- ACCURATE MACHINING
- COMPACT DESIGN ALLOWS HIGH LOADING

How to Order

SF (1) F (2) 20 (3)

1 Floating Joint

2 Mounting

Blank : Standard

* F : Flange Type
* ø10, ø16 : Standard Type only.

3 Applicable Tube/Thread Size

Type	Applicable Cylinder Bore Size	Connection
10	10	M4×0.7
16	16	M5×0.8
20	20	M8×1.25
32	25.32	M10×1.25
40	40	M14×1.5
63	50 · 63	M18×1.5
80	80	M22×1.5
100	100	M26×1.5
140	125 · 140	M30×1.5
160	160	M36×1.5

Specifications

Operating Pressure	Air Cylinder 9.9kgf/cm² {0.97MPa}
	Hydraulic cylinder 35kgf/cm² {3.5MPa}
Mounting	Standard, Flange type

Cautions

① Ambient temperature range 5° to 60°C
② Unscrew joint 1 or 2 turns from the end rod thread
③ Do not exceed axial misalignment of 5°
④ Do not axceed allowable eccentricity or life of joint could be shortened.
⑤ For applications other than air cylinder consult factory.
⑥ Joint is not suitable for rotation applications.
⑦ Cannot be re-used after dismanting.
⑧ Sealed and pre-lubricated.

Model

Model	Cylinder Bore size(mm)	Thread	Working thrust N(kgf)		Allowable eccentricity U(mm)	Angle
			standard	flange type		
Standard / Thread size						
SF10	10	M4×0.7	5.4(0.054)	–	0.5	±5°
SF16	16	M5×0.8	12.3(0.123)	–	0.5	
SF□20	20	M8×1.25	110(1.1)	110(1.1)	0.5	
SF□32	25.32	M10×1.25	250(2.5)	250(2.5)	0.5	
SF□40	40	M14×1.5	600(6.0)	440(4.4)	0.75	
SF□63	50.63	M18×1.5	1100(11)	1100(11)	1	
SF□80	80	M22×1.5	1800(18)	1800(18)	1.25	
SF□100	100	M26×1.5	2800(28)	2800(28)	2	
SF□125	125.140	M30×1.5	5400(54)	3600(36)	2.5	
SF□160	160	M36×1.5	7100(71)	5500(55)	3	

Basic Type/Series SF

SF 10～160

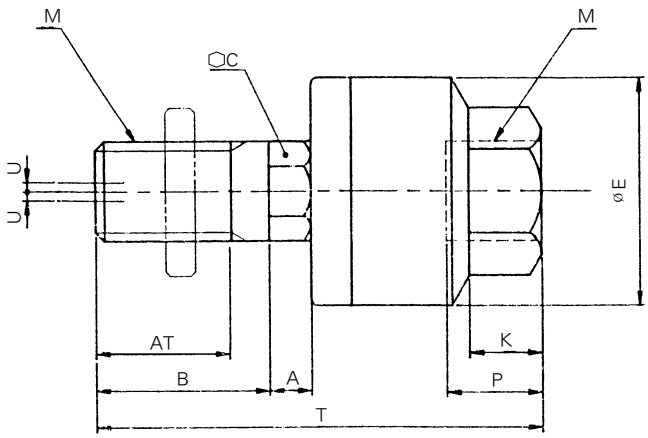

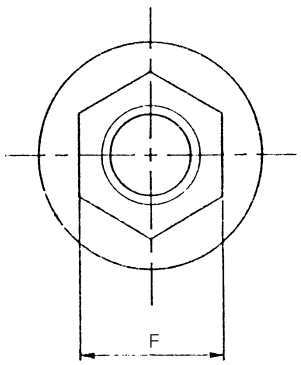

(mm)

Cylinder Size (mm)	Model	M		T	AT	B	A	C	K	E	F	P	U	N(Kgf)
		Port size	Pitch											
10	SF10	M4	0.7	26	9	10	1.5	5	4.6	12	7	5.5	0.5	5.4(0.054)
16	SF16	M5	0.8	34	12	14	2	6	5.6	16	10	7	0.5	12.3(0.123)
20	SF20	M8	1.25	45	15	16.5	5	7	6	21	13	8	0.5	110(1.1)
25,32	SF32	M10	1.25	47	17	18	5	8	8	24	17	9	0.5	250(2.5)
40	SF40	M14	1.5	62	20	22	6	11	11	31	22	13	0.75	600(6.0)
50,63	SF63	M18	1.5	75	25	26	6.5	14	13	41	27	15	1	1100(11)
80	SF80	M22	1.5	89	27	29	7	19	16	50	32	18	1.25	1800(18)
100	SF100	M26	1.5	110	34	36	11	24	21	59	41	24	2	2800(28)
125,140	SF125	M30	1.5	153	42	46	14	30	22	79	46	38	2.5	5400(54)
160	SF160	M36	1.5	179	52	56	16	36	24	96	55	42	3	7100(71)

Flange Type/Series SFF

SFF20~40

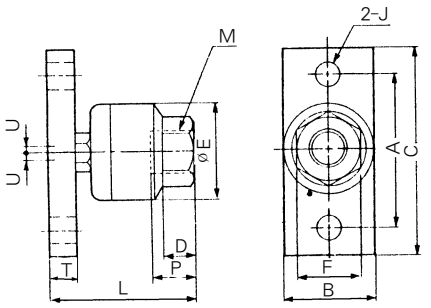

SFF50~160

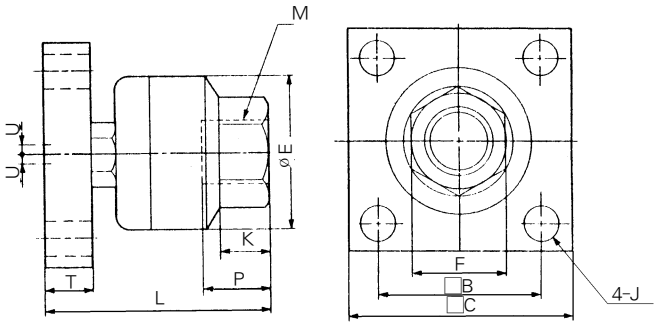

Cylinder Size (mm)	Model	M		L	B	A	C	K	E	F	T	J	P	U	N(kgf)
		Port Size	Pitch												
20	SFF20	M8	1.25	33	19	36	48	7	21	13	6	6.6	8	0.5	110(1.1)
25,32	SFF32	M10	1.25	36	25	40	52	8	24	17	6	6.6	9	0.5	250(2.5)
40	SFF40	M14	1.5	50	32	52	70	11	31	22	9	9	13	0.75	440(4.4)
50,63	SFF63	M18	1.5	62	-	45	65	13.4	41	27	12	9	15	1	1100(11)
80	SFF80	M22	1.5	76.5	-	55	75	16	50	32	16	11	18	1.25	1800(18)
100	SFF100	M26	1.5	94	-	65	90	20	69.5	41	19	11	24	2	2800(28)
125,140	SFF125	M30	1.5	132	-	82	125	22	79	46	24	18	38	2.5	3600(36)
160	SFF160	M36	1.5	154	-	100	150	24	96	55	29	22	42	3	5500(55)

Specifications of Solid State Swich

Auto Switch Specifications

Auto Switch No.	W1H□	W13□
Lead Wire Entry	Axial Direction	Right Angle
Application	Relay, Sequence Control	
Wiring Method	3 Wire System	2 Wire System
Power Source	DC10~28V	–
Load Voltage	DC28V Less	DC24V, AC100V
Current Consumption	100mA Less	DC24V : 5~40mA AC120V : 5~20mA
Internal Voltage Drop	100mA~0.5V Less	40mA~2.4V Less
Current Leakage	DC24V~10μA Less	
Current Load	OFF: 5mA or Less ON : 35mA or Less	–

- Operating Time : Max. 1ms
- Lead Wire : Oil resistant vinyl cord. ø0.13, 0.2mm², 3 cores(red white, black), cores(red, black), 0.5m long
- Shock Resistance : 1000m/S² (102G)
- Insulation Resistance : 50MΩ or more under the test voltage 500V DC between case and cable.
- Withstand Voltage : 1000VAC for 1min.(between lead wire and the case)
- Ambient Temperature : -10~60℃
- Protective Construction : IEC Standard, watertight and oil resising structure

※ "L" is added to the end when the lead is 3m long.
(ex) W1□L

Auto Switch Internal Circuit

W1H□

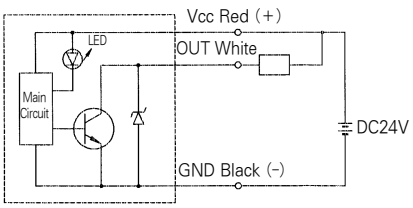

W13□

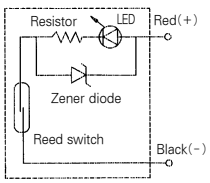

Auto Switch Dimensions (mm)

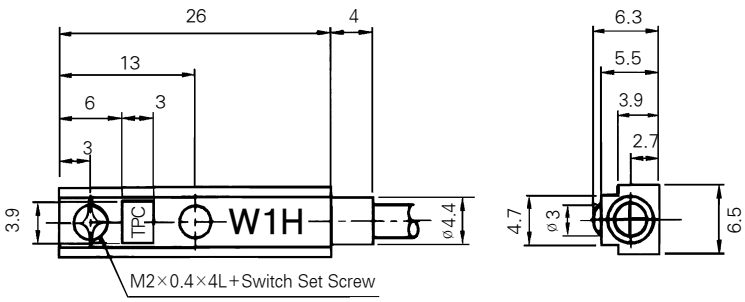

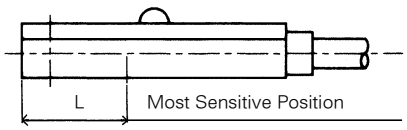

(mm)

Stations	W1H□	W13□
L	10	15
Operating Range	4~10	4~10

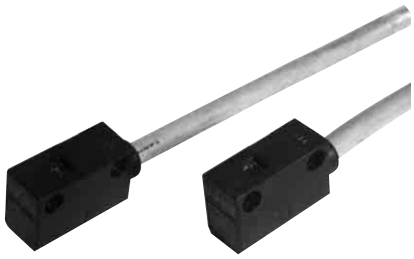

Auto Switch Specifications

Wiring Method	2 Wire
Applications	24V DC Relay, Sequence controller
Load Voltage	24V DC
Current Load	6~40mA
Internal Voltage Drop	7 V or Less
Current Leakage	1.6mA at 24V DC
Indicator Light	Appropriate operating range-Green lamp emitting diode
Acting Time	40ms or Less
Lead Wire	Oil proof vynil cap tire cord ø6, 0.5mm^2 , 2cores(white, black)
Impact Resistance	1,000G
Insulation Resistance	50MΩ or more at 500DC
Ambient Temperature	-10℃~60℃
Protective Construction	EC Standard IP67(Watertight)

Auto Switch Internal Circuit

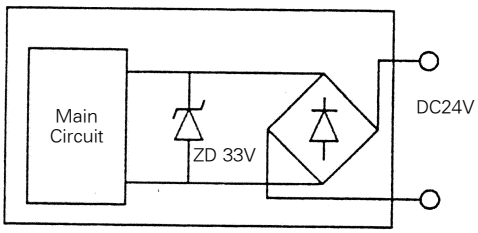

Auto Switch Dimensions

(mm)

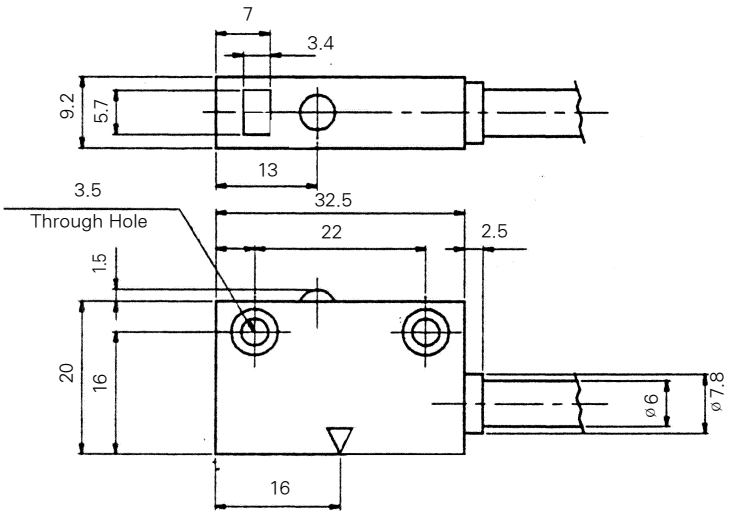

Auto Switch Specifications

Auto Swich Model	W3		
Application	Relay, Sequence Control		
Load Voltage	DC24V	AC100V	AC200V
Max. Load Current/Range of Load Current	5~50mA	5~25mA	5~12.5mA
Protection Circuit Contact Breaker Point	Built-in		
Internal Voltage Drop	2.4V		
Indicator Light	ON:Red Light Emitting Diode		

- Current Leakage - None
- Response time - 1.2ms
- Lead Wire - Oil proof vinyl. ø4(0.3)mm², 2 wire(red, black), 0.5m
- Impact Resistance - 30G
- Insulation Resistance - 50MΩ or more under the test voltage 500VDC (Between case and cable)
- Withstand Voltage - 1500VAC 1min(between case and cable)
- Ambient Temperature - 5~60℃
- Protective Construction - IEC spec IP67, Water-proof(JISCO920), oil-proof.

※ If 3m lead wire is required, L is put at end of model numbers.
(Example) W3L

Auto Switch/Internal Circuit

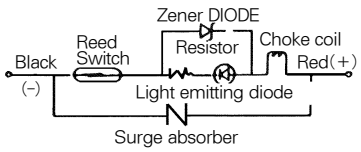

Auto Switch Dimensions

(mm)

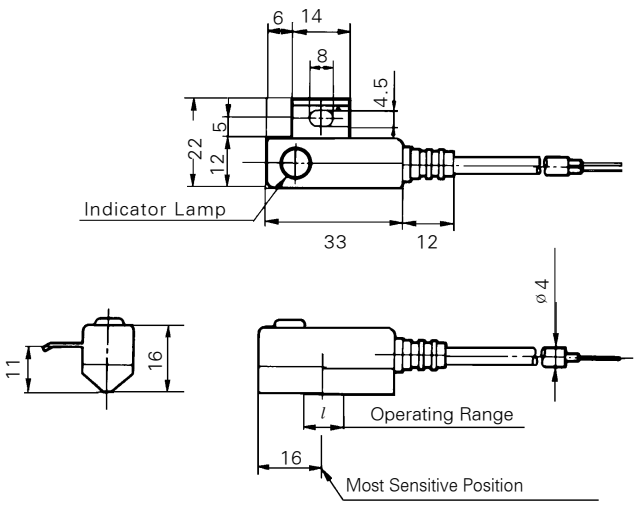

Operating Range (Dimensions)

(mm)

Series	Bore Size(mm)							
	ø40	ø50	ø63	ø80	ø100	ø125	ø140	ø160
AMD	9	10	11	11	11	-	-	-
ALD/ALXD	-	-	-	-	-	10	10	10

Auto Switch Specifications

Auto Switch Model	W4	
Application	Relay, Sequence Control	
Voltage	DC24V	AC100V
Range of Load Current	5~40mA	5~20mA
Protection Circuit for Contact Breaker Point	None	
Internal Voltage Drop	2.4V or less	
Indicator Light	ON:Red light emitting diode	

- Current Leakage - None
- Response time - 1.2 ms
- Lead Wire - Oil proof vinyl. ø3.4, 0.2mm^2, 2 wire(red, black), 0.5 m
- Impact Resistance - 30G
- Insulation Resistance - 50MΩ or more under the test voltage 500VDC (Between case and cable)
- Withstand Voltage - 1500VAC 1min(between case and cable)
- Ambient Temperature - 5~60℃
- Protective Construction - IEC spec IP67, Water-proof(JISC0920), oil-proof.

※ If 3m lead wire is required, L is put at end of model numbers.
(Example) W4L

Auto Switch/Internal Circuit

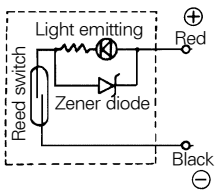

Auto Switch Dimensions (mm)

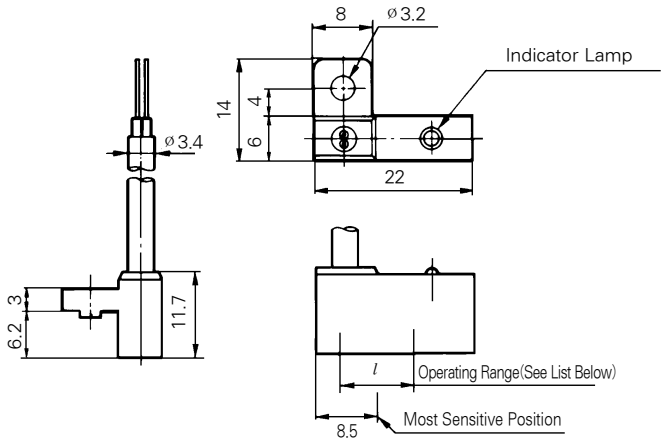

Operating Range (l Dimensions) (mm)

Series	Bore Size(mm)									
	ø12	ø16	ø20	ø25	ø32	ø40	ø50	ø63	ø80	ø100
AQ	10	8	9	9	11	11	10	12	12	13

Specifications W5 Type(With indicator lamp)

Auto Switch Model	W5	
Application	Relay, Sequence Control	
Load Voltage	DC24V	AC100V
Max. Load Current/Range of Load Current	5~40mA	5~20mA
Protection Circuit for Contact Breaker Point	None	
Internal Voltage Drop	2.4V or less	
Indicator Light	ON:Red light emitting diode	

- Current Leakage — None
- Response Time — 1.2ms
- Lead Wire — Oil proof vinyl, ø3.4 0.2㎟, 2 Wire(red, black), 0.5m(18in)
- Impact Resistance— 30G
- Insulation Resistance — 50MΩ or more under the test voltage 500VDC (Between case and cable)
- Withstand Voltage — 1500VAC 1min (between case and cable)
- Ambient Temperature — -10~60℃
- Protective Construction — IEC spec IP67, Water-proof(JISCO920), oil-proof.

※ If 3m lead wire is required, L is put at the end of numbers.
Example : W5L

Auto Switch/Internal Circuit

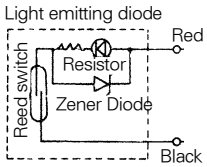

Auto Switch Dimensions (mm)

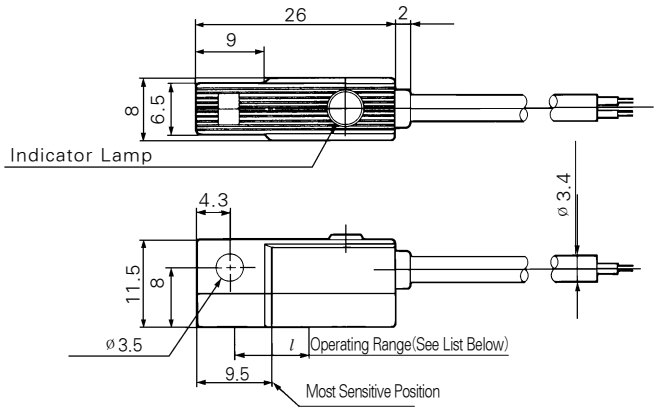

Operating Range(l Dimension) (mm)

Series	Bore size (mm)			
	ø20	ø25	ø32	ø40
AX	7	8	8	8

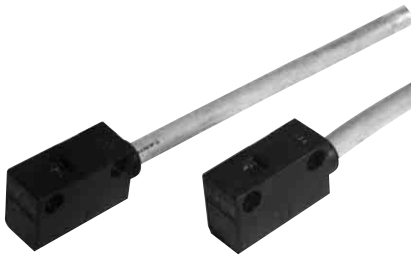

Auto Switch Specifications

Auto Switch model	W6(L)(Z)	W7(L)(Z)	
Operating Voltage	AC120V	DC24V	AC100V
Operating Current Range	20mA	5~40mA	5~20mA
Internal Voltage Drop	0V	Max 2.4V	
Operating Time	1.2m/sec		
Impact Resistance	30G		
Protective Construction	IEC STandard IP67		
Pilot Lamp	OFF Lighting(Red LED)	ON Lighting(red LED)	
Current Leakage	MAX. 1.8mA	0	
Ambient Temperature Range	-10~60℃		
Insulation Resistance	50MΩ/500V DC		
Application	Relay, Sequence Controller		

Auto Switch Dimensions (mm)

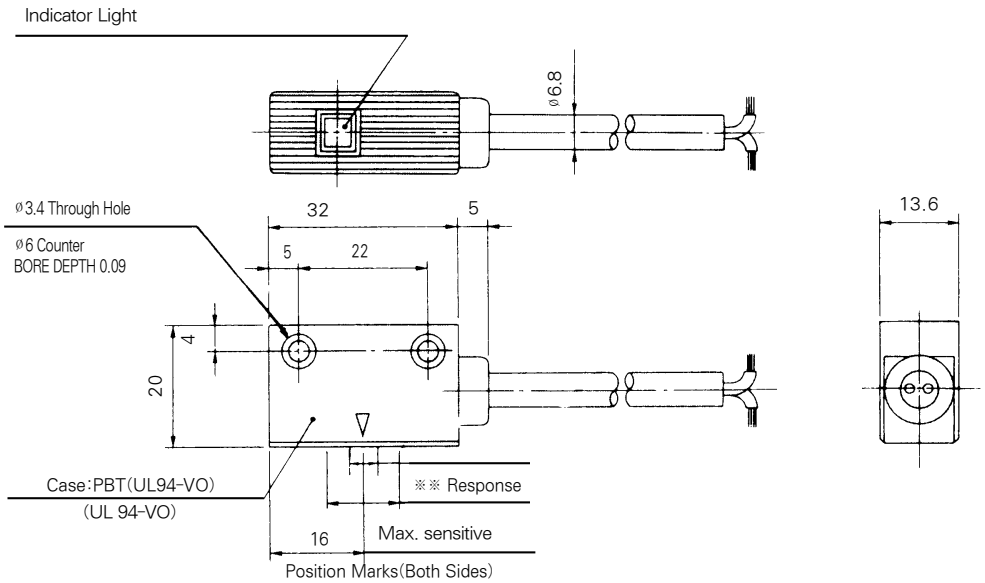

Operation Range (Dimension)

Series	Bore Size(mm)	
	ø 50	ø63
ADQCP	8	8
AMD□P	9	9
AJCP	8	8

Mini Auto Switch

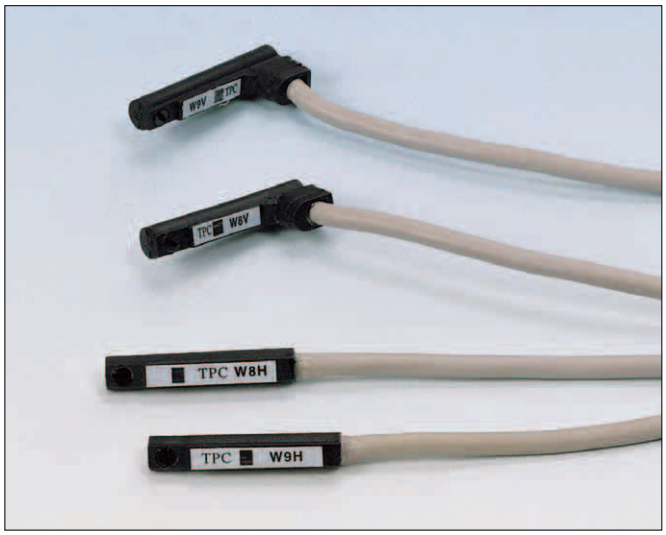

- Enlargement of standard lead wire
- Oil proof and internal combusion is excellent
- Compact Design
- Easy to check existing / non plug

How to Order

W ✻ ✻ ✻
1 2 3 4

1 W : TPC AUTO SWITCH MODEL

2 8 : Mini existing plug point AUTO SWITCH
9 : Mini non plug point round AUTO SWITCH

3 H : LEAD WIRE HORIZONTAL TYPE
V : LEAD WIRE VERTICAL TYPE

4 Blank : Wiring Method(2 wires), LEAD WIRE Length(1m)
L : LEAD WIRE(3m)
N : Wiring Method(3 wires, NPN), LEAD WIRE Length(1m)
P : Wiring Method(3 wires, PNP), LEAD WIRE Length(1m)
NL : Wiring Method(3 wires, NPN), LEAD WIRE (3m)
PL : Wiring Method(3 wires, PNP), LEAD WIRE (3m)
*N, P, NL, PL are for non plug point round type.

Specification

Items	Existing plug point(W8**)	Non plug point(W9**)	Note
SIZE	ø4	ø4	
Power Source	DC24V, AC100V	DC24V	
Current Consumption	5~40mA (DC24V) 5~20mA(AC110V)	5~30mA	
Lead wire entry	Vertical, Horizontal	Vertical, Horizontal	
LAMP	ON : Red LED	ON : Green LED	
Wiring Method	2 wires	2 wires(3 wires)	( )is OPTION
Power Method	-	NPN, PNP	
Mounting	Mounting screw on rail	Mounting screw on rail	
Acting Time	under 1.2ms	under 1.2ms	
Internal pressure	under 2.4V	under 4.5V	
Min.operating gauss	over 65G	over 35G	
Max.operating gauss	under 450G		
Life Time	5V, 5mA : 1×10^7 12V, 5mA : 1×10^7 24V, 40mA : 4×10^6	-	

Sensing Distance of Switch

Model	W8**	W9**
L(Most sensitive position)	13	6.5
Sensing Distance	8 ~ 10	4 ~ 4.5

Internal Circuit

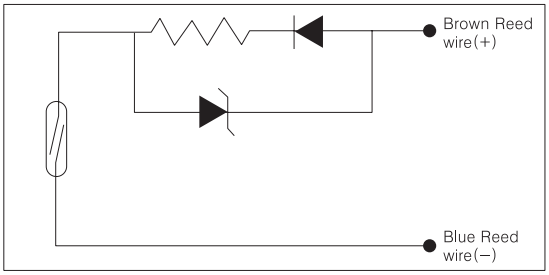

< For exsiting plug point >

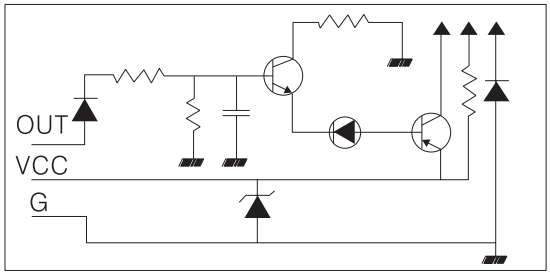

< For non plug point >

Dimensions

W8*

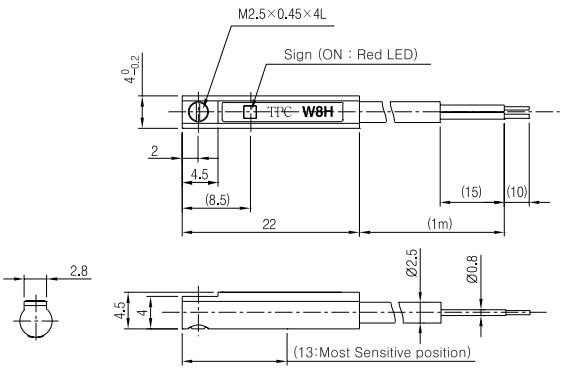

Horizontal(H)

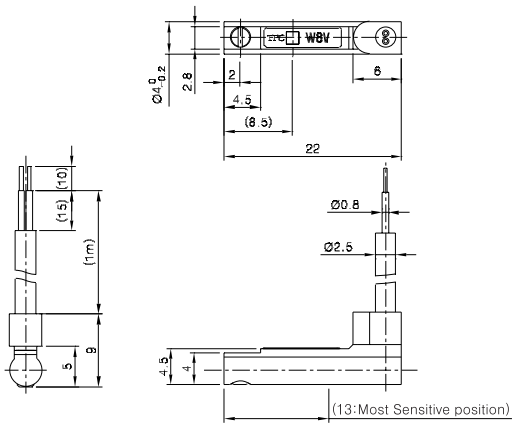

Vertical(V)

W9*

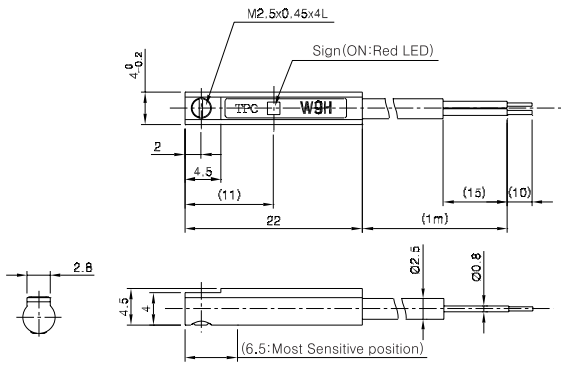

Horizontal(H)

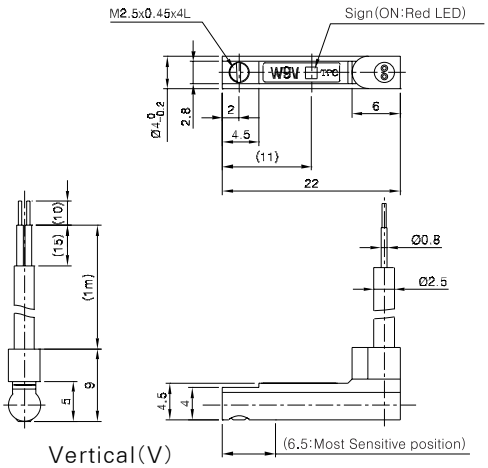

Vertical(V)

Series SPS

General Purpose Pressure Switch

- Application for Hydraudic, Pneumatic parts, semi-conductor, CNC mechine, Oxygen producer, compressor, chemical plant and power plant etc.is possible to control pressure automatively.
- Compact Design
- Light Weight

How to Order

SPS 203 — 02

1 2 3

1 General Purpose Pressure Switch

2 Operating Pressure Range
203 : -0.05 ~ 0.3MPa(-0.5 ~ 3.1kgf)
206 : -0.05 ~ 0.6MPa(-0.5 ~ 6.1kgf)
210 : 0.01 ~ 1MPa(1 ~ 10.2kgf)
220 : 0.05 ~ 2MPa(5 ~ 20.4kgf)
230 : 0.05 ~ 3MPa(5 ~ 30.6kgf)

3 Port Size
Blank : 7/16"-20(1/4" SAE Flare Type 45°)
01 : PT 1/4"
02 : PT 3/8"
03 : ø2, 4×100 Capillary Tube, 1/4" Flare Nut

Specification

Item \ Series	SPS-203	SPS-206	SPS-210	SPS-220	SPS-230
Fluid	Non Corrosive Water, Air, Liquids, Inert Gases, Steam				
Operating Pressure(kgf/cm²)	0.5CmHg ~ 3	0.5CmHg ~ 6	1 ~ 10	5 ~ 20	
Ambient and Fluid Temperature(℃)	-10 ~ 120℃				5 ~ 30
Range of On-Off control(kgf/cm²)	0.35 ~ 2	0.6 ~ 4	1 ~ 3	3 ~ 5	
Proof Pressure(kgf/cm²)	11	16.5		40	3 ~ 10
Weight(kg)	0.42				
Connection	1ab(When pressure increasing, ON or OFF)				
Operate Frequency	1 Time / l sec				
Durability	100,000 Times or more				
Power Supply	AC110V 10A / AC220V 5A				
Using Voltage	DC24V, AC110V, AC220V				
Max. Supply Voltage	2 ~ 5A				
Shock Resistance	30G				

Using Fluid

Meterial of parts which meets Fluid must be considered.

Applicable Fluid	Material	
	Bellows	Parts which meets fluid
Non corrosive water, air, liquids, inert, gases	Phosphorus/ bronze	C3604B
※ Fluid which can't br corroded under 150℃		

※ Use under 80℃ at atmosphere.

Connection Structure

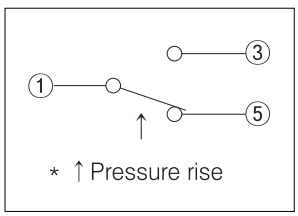

1 : Common Terminal
3 : Close on, Pressure Decrease
5 : Close on, Pressure Increase

Construction

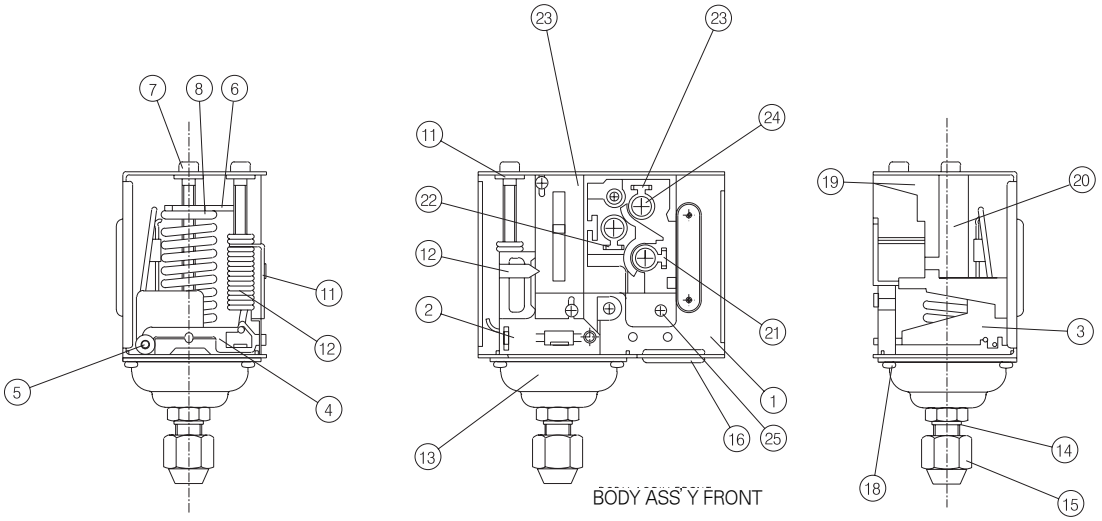

Parts List

No.	Name	Meterial	Note
①	Body	SPCC	
②	Flat	SPCC	
③	Lever	SPCC	
④	Lever Guide	SPCC	
⑤	Lever Pin	SUS	
⑥	Spring Stopper	SPCC	
⑦	Aed	SWCH	
⑧	Coil Spring	SWP	
⑨	Diff Spring Nut	SPCC	
⑩	Diff Spring	SWP	
⑪	Eding	SK	Ø4
⑫	Point	P.P	
⑬	Rod Boot	BSP	

No.	Name	Meterial	Note
⑭	Supporting Bolt	BSME	
⑮	Supporting Nut	BSME	
⑯	Packing	CR	
⑰	Scale Flat	AL	
⑱	Screw	SWCH	3×5
⑲	Switch Box	PHENOL	
⑳	Switch Cover	N6	
㉑	Terminal	BSP	
㉒	Lower of Terminal	BSP	
㉓	Upper of Termianl	BSP	
㉔	Supporting pin of terminal	BS	BS 4×5
㉕	Supporting Bolt	SWCH	3×10

Dimensions

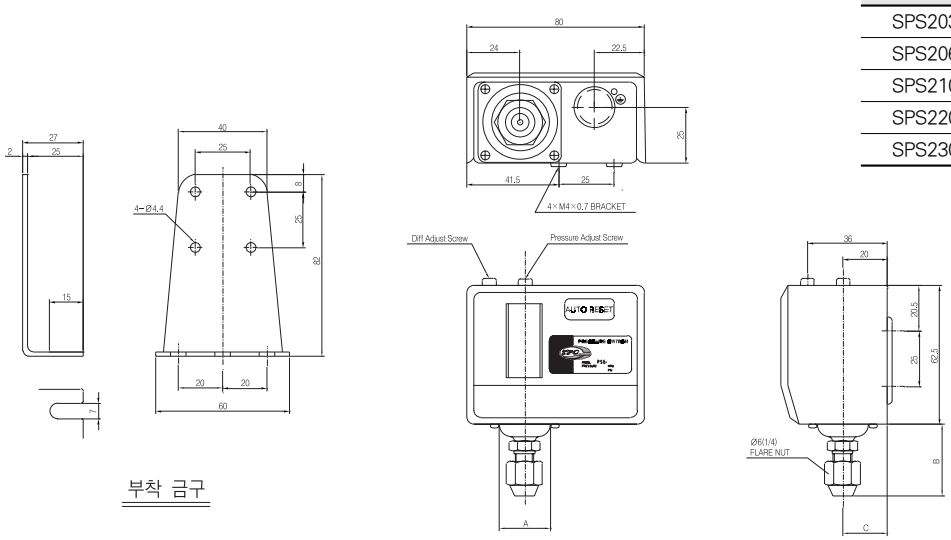

Model	A	B	C
SPS203	38.5	38.9	22.4
SPS206	34.4	36	22.4
SPS210			
SPS220	22	32.7	18.5
SPS230			

Model	B
SPS-203-01	48.9
SPS-206-01	46
SPS-210-01	
SPS-220-01	42.7
SPS-230-01	
SPS-203-02	39.9
SPS-206-02	37
SPS-210-02	
SPS-220-02	33.7
SPS-230-02	

⚠ Precautions

Be aware of that before installation.

Choice

⚠ Notice

① Choose suitable material to using Fluid. It's choosen according to using Fluid. If you have a question please contact to us.

Wires

⚠ Caution

① Don't contact inner wire to lever which meet switch.

⚠ Notice

① Inner diameter of opening wire grommet is Ø17. 1/2B wire is mounted if grommet is seperated.

Mounting · Piping

⚠ Notice

① Mounting direction is possible for horizontal and vertical mode.

Pressure

⚠ Caution

① Mounting reducer is good to reduce pulsation in case of using liquids. SPS is easy to break because of and pulsation.

Setting up Pressure

⚠ Notice

① Set up pressure by turning adjustable bolt. For turning right, pressure will increase. For turning left, pressure will decrease.

② Control on-off gap by turning on-off gap adjustable bolt. For turning right, pressure will increase. For turning left, pressure will decrease.

③ Use on-off gap in the range.

④ scale is for standard pressure. Measure the pressure by pressure gauge.

⑤ Switching fixed scale is created value at pressure increasing.

Electro-Pneumatic Positioner:TPC-1000L

TPC-1000L Linear

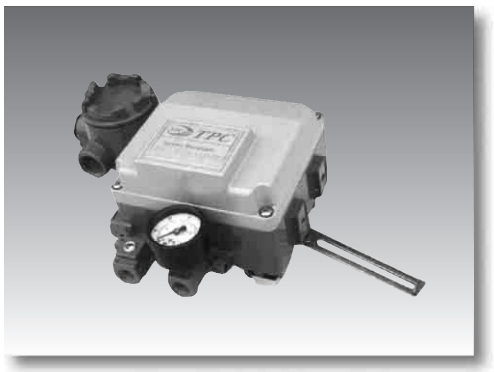

Specifications

Type / Item	TPC -1000L Single Acting	TPC -1000L Double Acting
Input Signal	4-20mA DC	
Impedance	250 ±15 Ohm	
Supply Pressure	1.4 ~ 7kgf/cm^2 (20~100 psi)	
Stroke	10 ~ 150 mm	
Air Connection	PT (NPT) 1/4	
Gauge Connection	PT (NPT) 1/8	
Conduit	PF 1/2(G1/2)	
Explosion Proof	ExdmIIB(C)T6, ExiaIIBT6	
Protection	IP66	
Ambient Temp.	-20 ~ 70°C	
Linearity	±1% F.S.	±2% F.S.
Hysteresis	1% F.S.	
Sensitivity	±0.2% F.S.	± 0.5% F.S.
Repeatability	± 0.5% F.S.	
Air Consumption	3LPM(Sup.=1.4kgf/cm^2, 20psi)	
Flow Capacity	80LPM(Sup.=1.4kgf/cm^2, 20psi)	
Material	Aluminum Diecasting	
Weight	2.7kg (6 lb)	

Ordering Symbols : TPC-1000L □□□□ ex)TPC-1000L **S m 1 1**

Model	Acting Type	Explosion Proof	Lever Type	Orifice Type
TPC-1000L	S Single Acting	m ExdmIIBT6	1 Below 40mm	1 Below 90cm^3
	D Double Acting	c ExdmIICT6	2 40 ~ 70 mm	2 90 ~ 180cm^3
		i ExiaIIBT6	3 70 ~ 100mm	3 Over 180cm^3
		n Non-explosion	4 100 ~130mm	
			5 130 ~150mm	

Dimensions

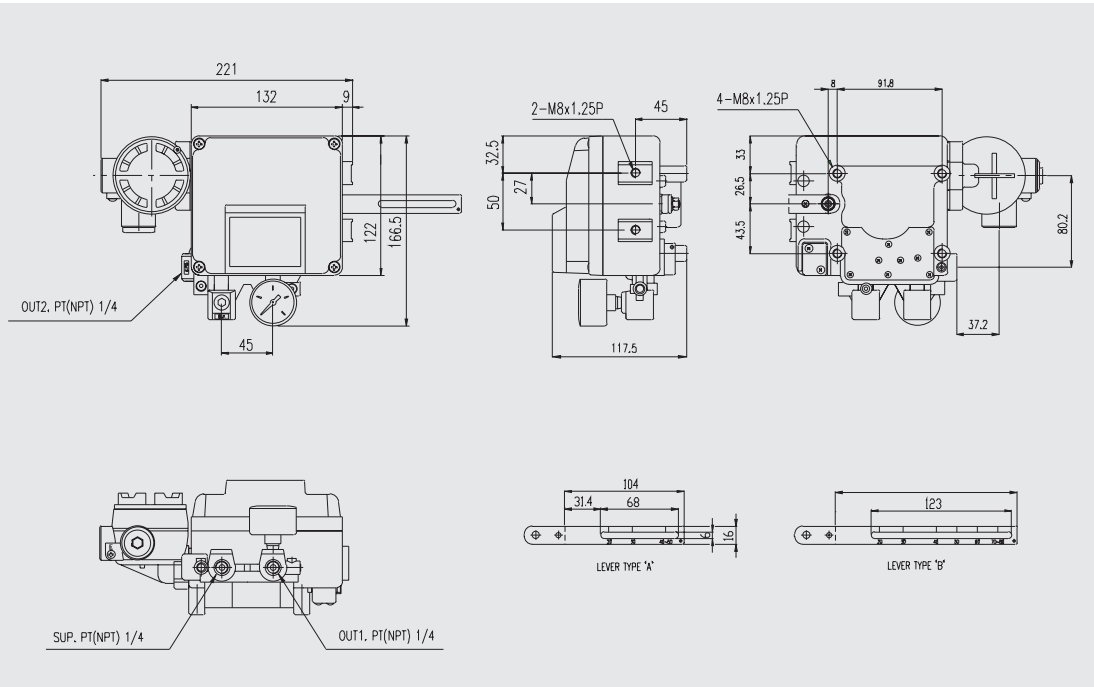

Electro-Pneumatic Positioner : TPC-1000R

Specifications

Item \ Type	TPC -1000R Single Acting	TPC -1000R Double Acting
Input signal	4-20mA DC	
Impedance	250 ± 15 Ohm	
Supply Pressure	1.4 ~ 7kgf/cm2 (20~100 psi)	
Stroke	0 ~ 90°	
Air Connection	PT (NPT) 1/4	
Gauge Connection	PT (NPT) 1/8	
Conduit	PF 1/2(G1/2)	
Explosion Proof	ExdmIIB(C)T6, ExiaIIBT6	
Protection	IP66	
Ambient Temp.	-20 ~ 70°C	
Linearity	±1% F.S.	± 2% F.S.
Hysteresis	1% F.S.	
Sensitivity	± 0.2% F.S.	± 0.5% F.S.
Repeatability	± 0.5% F.S.	
Air Consumption	3LPM (Sup.=1.4kgf/cm^2, 20 psi)	
Flow Capacity	80LPM (Sup.=1.4kgf/cm^2, 20 psi)	
Material	Aluminum Diecasting	
Weight	2.8kg (6.2 lb)	

Standard

TPC-1000R Rotary

Specifications

Input Type	2 Wire
Input Signal	90°
Output Signal	4 - 20mA DC
Load Resistance	0 ~ 600 Ohm
Noise Range	50mVp.p
Adjustment	Zero : ±10% Span: 60~105%
Explosion Proof	Non-Explosion Proof
Protection	IP66
Linearity	± 1%
Sensitivity	± 0.2%
Hysteresis	0.2%
Supply Voltage	15 ~ 30V DC
Weight	3.3Kg (7.3 lb)

Standard + Position Transmitter

Specifications

Input Type	3 Wire
Input Signal	90°
Output Signal	4~20mA & On/Off Signal
Load Resistance	0 ~ 600 Ohm
Noise Range	50mVp.p
Adjustment	Zero : ± 10% Span: 60~105%
Explosion Proof	Non-Explosion Proof
Protection	IP66
Linearity	± 1%
Sensitivity	± 0.2%
Hysteresis	0.2%
Supply Voltage	15 ~ 30V DC & 125V-250V AC (Limit Switch)
Switch Type	Mechanical Type 2 x SPDT
Weight	4.2kg(9.3 lb)
Rating	0.6A 125V~16A 250V AC

Standard + Position Transmitter & Limit switch

Electro-Pneumatic Positioner:TPC-1000R

Ordering Symbols : TPC-1000R □□□□□ ex)TPC-1000R **S m 1 1 1**

Model	Acting Type	Explosion Proof	Lever Type	Orifice Type	Option
TPC-1000R	S Single Acting	m ExdmIIBT6	1 M6 x 40L	1 Below 90cm^3	0 None
	D Double Acting	c ExdmIICT6	2 M6 x 63L	2 90 ~ 180cm^3	1 +PTM
		i ExiaIIBT6	3 M8 x 40L	3 Over 180cm^3	2 + L/S
		n Non-explosion	4 M8 x 63L		3 +PTM+L/S
			5 NAMUR		

Dimensions - Standard Type

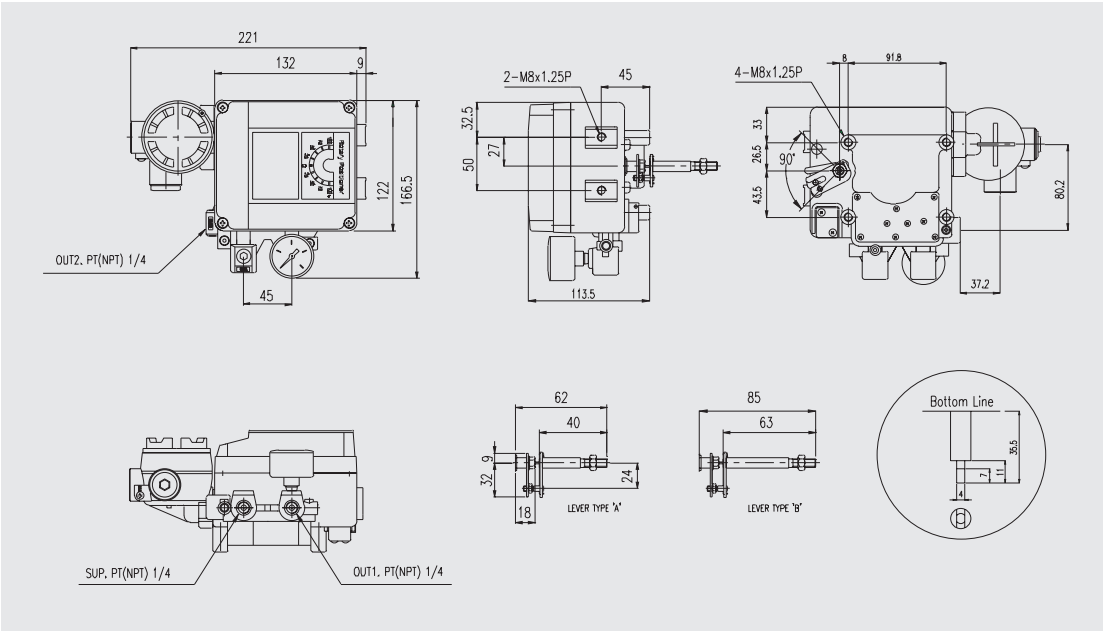

Dimensions - Iucluded Position Transmitter & Limit Switch Type

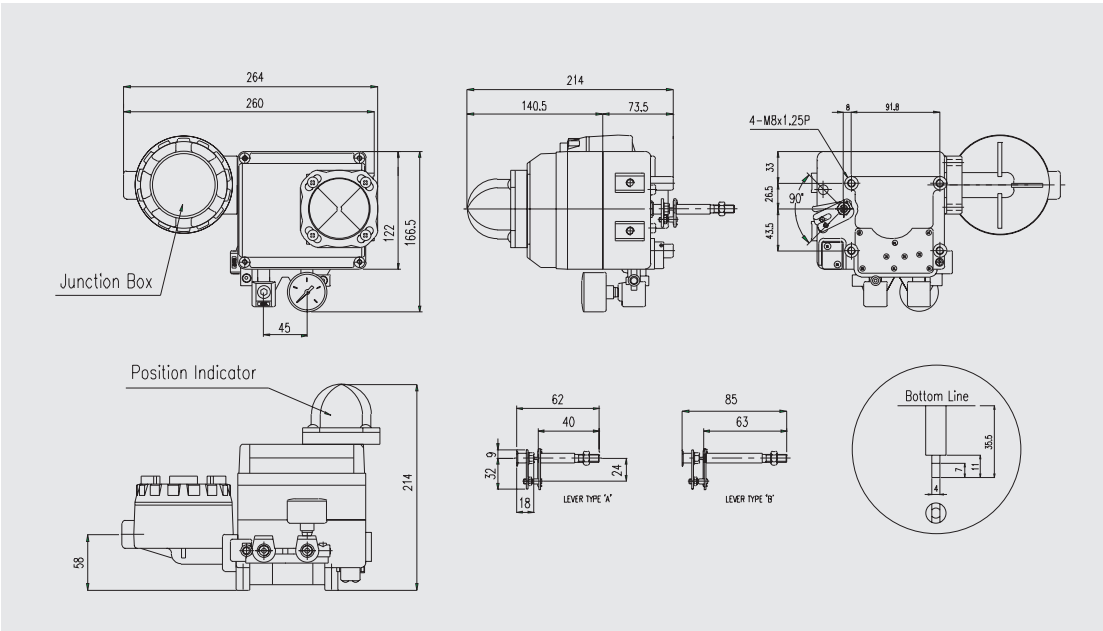

Pneumatic-Pneumatic Positioner : TPC-1200

Specifications

Type / Item	TPC-1200L Linear Single	TPC-1200L Linear Double	TPC-1200R Rotary Single	TPC-1200R Rotary Double
Input Signal	0.2~1kgf/cm^2 (3~15 psi)			
Supply Pressure	1.4 ~ 7kgf/cm^2 (20~100 psi)			
Stroke	10 ~ 150 mm		0 ~ 90°	
Air Connection	PT (NPT) 1/4			
Gauge Connection	PT (NPT) 1/8			
Protection	IP66			
Ambient Temp.	-20 ~ 70°C (-4~158°F)			
Linearity	± 1% F.S.	± 2% F.S.		
Hysteresis	1% F.S			
Sensitivity	± 0.2% F.S.	± 0.5% F.S.		
Repeatability	± 0.5% F.S.			
Air Consumption	3LPM(Sup.=1.4kgf/cm^2, 20 psi)			
Flow Capacity	80LPM(Sup.=1.4kgf/cm^2, 20 psi)			
Material	Aluminum Diecasting			
Weight	1.7 kg (3.7 lb)			

TPC-1200L Linear

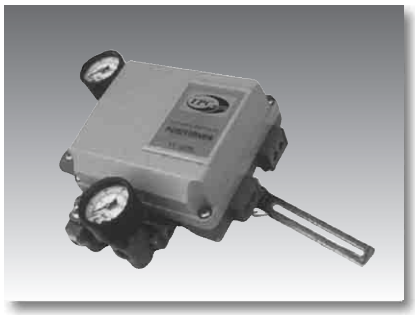

Ordering Symbols : TPC-1200 □□□□

Model	Actuator Motion	Acting Type	Lever Type Linear	Lever Type Rotary	Orifice Type
TPC-1200	L Linear Type	S Single Acting	1 Below 40mm	1 M6 x 40L	1 Below 90cm^3
	R Rotary Type	D Double Acting	2 40 ~ 70 mm	2 M6 x 63L	2 90 ~ 180cm^3
			3 70 ~ 100mm	3 M8 x 40L	3 Over 180cm^3
			4 100 ~130mm	4 M8 x 63L	
			5 130 ~150mm	5 NAMUR	

Dimension

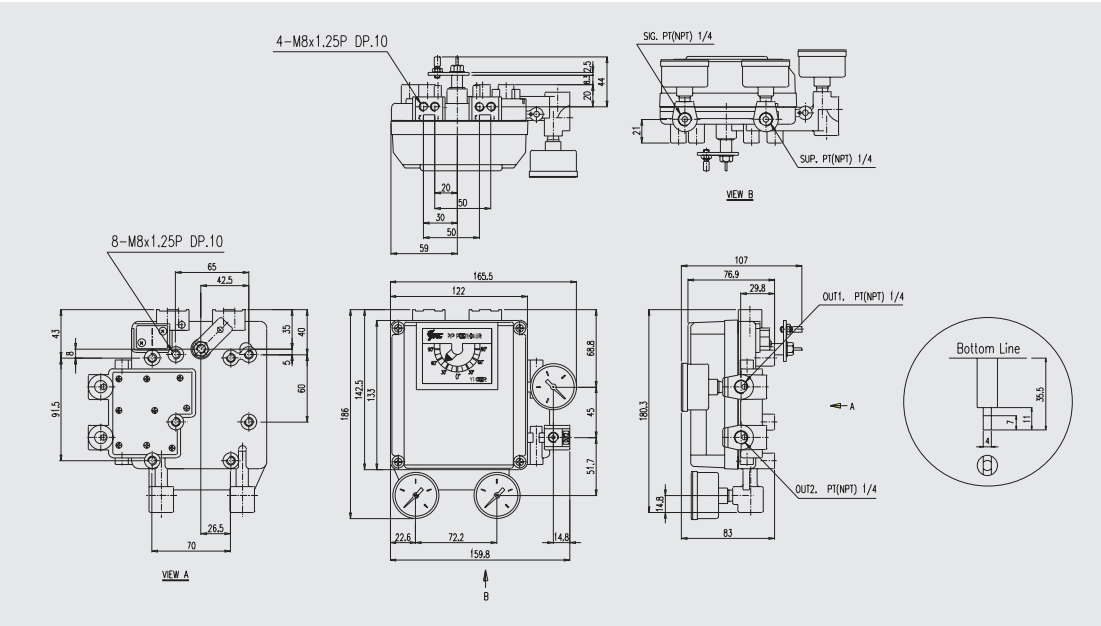

Supplement

- Quality Certificates
  - ISO 9001 ..... E-3
  - CE Mark E-4
- International Unit Systems
  - SI Units E-5
- Products Series Index E-6

kfq® Korean Foundation for Quality

QUALITY SYSTEM CERTIFICATE

TPC MECHATRONICS CORPORATION

524-2, Gajwa-dong, Seo-gu, Incheon-si, Korea

Korean Foundation for Quality certifies that The Quality Management System of the above organization has been assessed and complied with the requirements of the quality standard

Standard

KS A 9001:1998 ISO 9001:1994 EN ISO 9001:1994

Scope of Certification

·DESIGN, DEVELOPMENT, PRODUCTION, SALES AND SERVICING OF AIR CYLINDER
·PRODUCTION, SALES AND SERVICING OF SOLENOID VALVE, AIR COMBINATION(FILTER, REGULATOR, LUBRICATOR)

Quality Management System

Valid Period 1999. 12. 28 ~ 2002. 12. 27

Certificate Number : AC-00436

KAB

Issue Date 2000. 12. 19
Initial Registration Date 1996. 12. 28

Woo Hyun Kim
President & CEO of KFQ

kfq

The use of Accreditation Mark indicates accreditation in respect of those activities covered by the Accreditation Certificate Number KAB-QC-01

www.kfq.or.kr
KFQ, (150-756) FKI 8F 28-1 Yoido-Dong Youngdungpo-Gu Seoul Korea

IQNet®

THE INTERNATIONAL CERTIFICATION NETWORK

CERTIFICATE

IQNet and KSA-QA hereby certify that organization

TPC MECHATRONICS CORPORATION

524-2, KAJWA-DONG, SEO-GU, INCHON, KOREA

for the following field of activities

· DESIGN, DEVELOPMENT, PRODUCTION, SALES AND SERVICING OF AIR CYLINDER
· PRODUCTION, SALES AND SERVICING OF SOLENOID VALVE, AIR COMBINATION (FILTER, REGULATOR, LUBRICATOR)

has implemented and maintain a

Quality Management System

which fulfills the requirements of following standard

ISO 9001

Issued on : 1999-12-28
Validity : 2002-12-27

Registration Number : **KR-00436**

IQNet

Catherine Neville
President of IQNet

Woo Hyun KIM
President & CEO of KSA-QA

KSA-QA

Members of IQNet (resigstered association):

AENOR *Spain* AFAQ *France* AIB Vincotte International *Belgium* APCER *Portugal* CQS *Czech Republic* CISQ *Italy* DQS *Germany* DS *Denmark* ELOT *Greece* FCAV *Brazil* HKQAA *Hong Kong* IRAM *Argentina* ICONTEC *Colombia* JQA *Japan* KEMA *Netherland* KSA-QA *Korea* MSZT *Hungary* NCS *Norway* NSAI *Ireland* ÖQS *Austria* PCBC *Poland* PSB *Singapore* QAS *Australia* QMI *Canada* SFS *Finland* SII *Israel* SIQ *Slovenia* SQS *Switzerland*

IQNet is represented in the USA by the following members : AFAQ, AIB Vincotte International, CISQ, DQS, KEMA, NSAI and QMI

EC Declaration of Conformity

according to EC Machinery Directive 89/392/EEC, Annex II A

We herewith declare that the following machine complies with the appropriate basic safety and health requirements of the EC Directive based on its design and type, as brought into circulation by us. In case of alteration of the machine, not agreed upon by us, this declaration will lose its validity.

Machine Description : SOLENOID VALVES

Model Designation : TVF3000, TVF5000 series

Electrical Rating : 100VAC 200VAC 50/60HZ, 24VDC

Press Rating : 1~9 kgf/㎠

Lot No. : MY16

Manufactured by : TPC MECHATRONICS CORP.

Address : 524-2 , Kajwa-Dong, Seo-Ku, Incheon, Korea

Conforms to the following Directives : EC Machinery Directive (89/392/EEC)
EC Low Voltage Directive (73/23/EEC)

Uses the following standards :

EN414 : Hazard identification and classification of risk

EN292 part1&2 : Safety of Machinery-Basic concepts, General principles for design

EN983 : Safety requirement for Fluid power systems and their Components: Pneumatics

EN60204-1 : Safety of machinery- Electrical equipment of machines

(Signature)

November 12, 1997
(Date)

Jay Yun Uhm
(Name)

President
(Position)

Supplement Ⓔ

International Unit Systems (SI Units)

Major SI Units

No	Description	Symbol	Conventional unit→SI unit	SI unit→Conventional unit
1	Pressure	MPa	1kgf/cm²≒0.098MPa	1MPa≒10.2kgf/cm²
2	Force/Load	N	1kgf/cm²≒9.8N	1N≒0.102kgf
3	Moment of force	N · m	1kgf · m≒9.8N · m	1N · m≒0.102kgf · m
4	Vacuum pressure	- KPa	-1mmHg≒-0.133kPa	-1kPa≒-7.5mmHg
5	Moment of inertia	kg · m²	1kgf · cm · S²≒0.098kg · m²	1kgf · m²≒10.2kgf · cm · S²
6	Kinetic energy	J	1kgf · cm≒0.098J	1J≒10.2kgf · cm

① Pressure MPa→kgf/cm²(1MPa≒10.2kgf/cm²)

MPa	0.001	0.002	0.003	0.004	0.005	0.006	0.007	0.008	0.009	0.01	0.011	0.012	0.013	0.014	0.015	0.016	0.017	0.018	0.019
kgf/cm²	0.01	0.02	0.03	0.04	0.05	0.06	0.07	0.08	0.09	0.1	0.11	0.12	0.13	0.14	0.15	0.16	0.17	0.18	0.19
MPa	0.02	0.03	0.04	0.05	0.06	0.07	0.08	0.09	0.1	0.11	0.12	0.13	0.14	0.15	0.16	0.17	0.18	0.19	0.2
kgf/cm²	0.2	0.31	0.41	0.51	0.61	0.71	0.82	0.92	1.0	1.1	1.2	1.3	1.4	1.5	1.6	1.7	1.8	1.9	2.0
MPa	0.3	0.4	0.5	0.6	0.7	0.8	0.9	1.0	1.1	1.2	1.3	1.4	1.5	1.6	1.7	1.8	1.9	2.0	2.5
kgf/cm²	3.1	4.1	5.1	6.1	7.1	8.2	9.2	10.2	11.2	12.2	13.3	14.3	15.3	16.3	17.3	18.4	19.4	20.4	25.5
MPa	3.0	3.5	4.0	4.5	5.0	5.5	6.0	6.5	7.0	7.5	8.0	8.5	9.0	9.9	10	20	30	40	50
kgf/cm²	30.6	35.7	40.8	45.9	51.0	56.1	61.2	66.3	71.4	76.5	81.6	86.7	91.8	101.0	102	204	306	408	510

② Force/Load N→kgf(1N≒0.102kgf)

N	0.1	0.2	0.3	0.4	0.5	0.6	0.7	0.8	0.9	1.0	1.1	1.2	1.3	1.4	1.5	1.6	1.7	1.8	1.9
kgf	0.01	0.02	0.03	0.04	0.05	0.06	0.07	0.08	0.09	0.1	0.11	0.12	0.13	0.14	0.15	0.16	0.17	0.18	0.19
N	2	3	4	5	6	7	8	9	10	11	12	13	14	15	16	17	18	19	20
kgf	0.2	0.3	0.4	0.5	0.6	0.7	0.8	0.9	1.0	1.1	1.2	1.3	1.4	1.5	1.6	1.7	1.8	1.9	2.0
N	30	40	50	60	70	80	90	100	110	120	130	140	150	160	170	180	190	200	250
kgf	3	4	5	6	7	8	9	10	11	12	13	14	15	16	17	18	19	20	25
N	300	350	400	450	500	550	600	650	700	750	800	850	900	950	1,000	2,000	3,000	4,000	5,000
kgf	30	35	40	45	50	55	60	65	70	75	80	85	90	95	100	200	300	400	500

Products Series Index

ITEM		PAGE
D		
Series DC	Check Valve	B-90
Series DM	3.5 Port Mechanical Valve	B-80
Series DS2000	Elastic Seal 5 Port Piont Solenoid Valve	B-58
Series DS3000	5 Port Piont Solenoid Valve/Sub Base Type	B-53
Series DS6000	M5 Type 3 Port Pilot Solenoid Valve	B-63
Series DV100	M5 Type 5 Port Pilot Solenoid Valve	B-08
Series DV1000・3000・4000	5Port Solenoid Valve	B-17
Series DT220	OR Valve	B-89
Series DW	2 Port Solenoid Valve	B-03
Series DS3000	5 Port Solenoid Valve	B-37
Series DS300	3 Port Solenoid Valve	B-34
Series DS5000	5 Port Solenoid Valve	B-43
Series DP300, 3000, 5000	3.5 Port Air Pilot Valve	B-50
Series DH	Hand Valve	B-78
Series DX2	ISO #2 Interface Solenoid Valve	B-68
N		
Series NLCD	Table Cylinder	A-276
P		
Series PC2000	F・R・L Combination	C-05
Series PC3000	F・R・L Combination	C-05
Series PC4000	F・R・L Combination	C-05
Series PC5000	F・R・L Combination	C-05
Series PF2000	Air Filter	C-16
Series PF3000	Air Filter	C-16
Series PF4000	Air Filter	C-16
Series PF5000	Air Filter	C-16
Series PR2000	Air Regulator	C-21
Series PR3000	Air Regulator	C-21
Series PR4000	Air Regulator	C-21
Series PR5000	Air Regulator	C-21
Series PL2000	Lubricator	C-26
Series PL3000	Lubricator	C-26
Series PL4000	Lubricator	C-26
Series PL5000	Lubricator	C-26
Series PW2000	Filter / Regulator	C-30
Series PW3000	Filter / Regulator	C-30
Series PW4000	Filter / Regulator	C-30
Series PW5000	Filter / Regulator	C-30
Series PFU/H	Coalescing Filter	C-38

S

Series SH2000・3000・4000・5000	Pressure Relief 3Port Valve with a Locking Hole	C-43
Series SP	Speed Controller-Threaded Elbow Type(Metal Version)	D-13
Series SPM	Metric One-Touch Fitting	D-15
Series SQ	Speed Controller-Threaded Elbow Type	D-03
Series SN	Silencer	D-20
Series SF	Fioating Joint	D-22
Series ST	Polyurethane Tube	D-19
Series SPS	General Purpose Pressure Switch	D-33

W

W1H, W13	Auto Switch	D-25
W2	Auto Switch	D-26
W3	Auto Switch	D-27
W4	Auto Switch	D-28
W5	Auto Switch	D-29
W6/W7	Auto Switch	D-30
W8/W9	Mini Auto Switch	D-31

T

Series TPC-1000	Electro-Pneumatic Positioner	D-36
Series TPC-1200	Pneumatic-Pneumatic Positioner	D-39
Series TDF	High Performance Air Filter	C-48
Series TAD	Refrigerated Air Dryer	C-62